Proactive Strategies for Monitoring and Managing Aging Related Degradation in Highly Irradiated Reactor Internals

Randy Lott

Westinghouse Electric Company

Life After 60 Workshop

Bethesda, Maryland

February 2008

Westinghouse

Reactor Internals

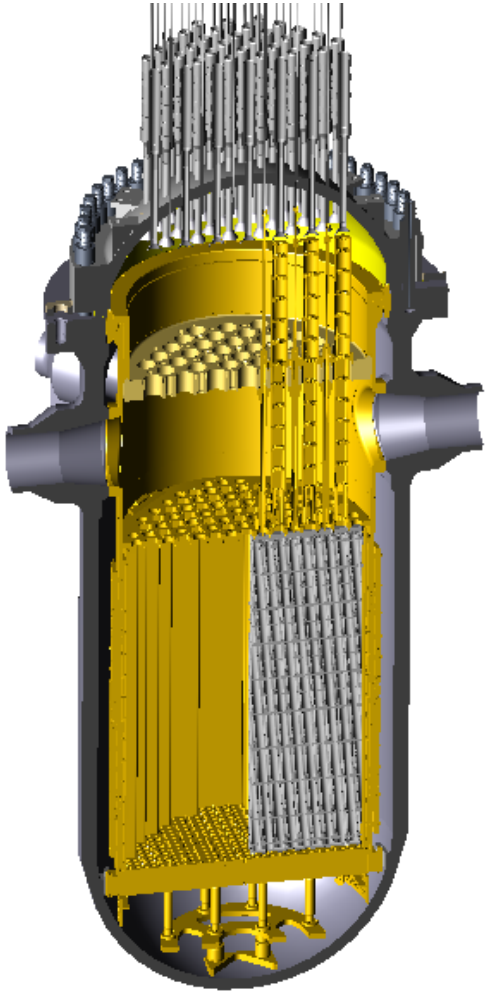

Unique Service Environment

Long Term Degradation

Require Proactive
Aging Management Program

Westinghouse

We have limited experience with long term exposure in high radiation environments!

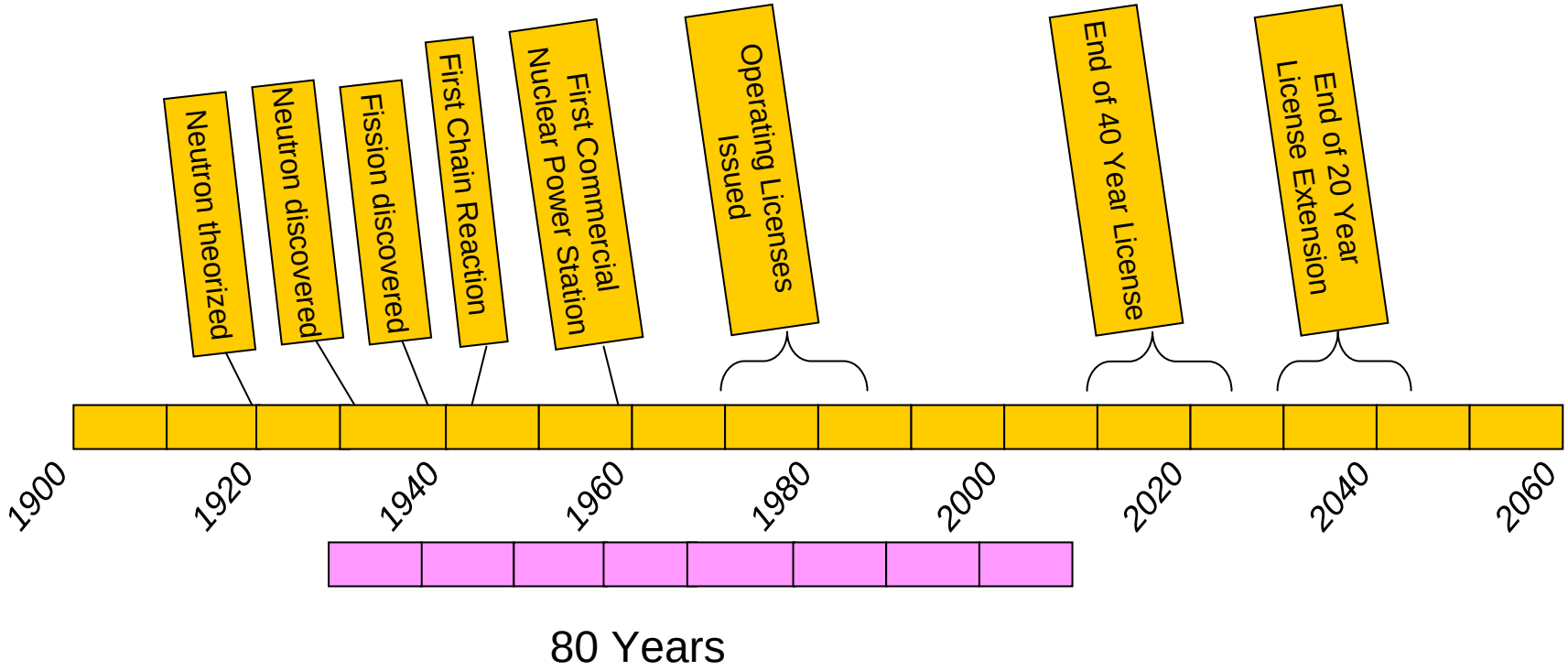

Unique Degradation Mechanisms

Westinghouse

Industry Materials Reliability Program

(MEOG/MTAG/EPRI)

- Materials Degradation Matrix
  - Comprehensive catalogue of potential mechanisms
- Issue Management Table
  - Systematic analysis of current programs
  - Gap Analysis
- Reactor Internals I&E Guidelines
  - Based on Functionality Analysis
  - Recommendation for Aging Management

Westinghouse

Materials Degradation Matrix Recognizes 17 Modes of Degradation

Applied to all reactor components.
(not just internals!)

Basis for developing the Issue Management Table!

Type	Mode	Code
Corrosion/Wear	Flow Assisted Corrosion	C/W:FAC
Corrosion/Wear	Pitting	C/W:Pitt
Corrosion/Wear	Wastage	C/W:Wstg
Corrosion/Wear	Wear	C/W:Wear
Fatigue	Environmental	Fat:Env
Fatigue	High Cycle	Fat:HC
Fatigue	Thermal	Fat:Th
Mechanical	Flux Effect	RIT:Flux
Mechanical	Irradiation Embrittlement	RIT:Emb
Mechanical	Thermal Aging	RIT:ThAg
Mechanical	Thermal Neutron	RIT:Thn
Mechanical	Void Swelling	RIT:VS
Stress Corrosion Cracking	Intergranular	SCC:IG
Stress Corrosion Cracking	Irradiation Assisted	SCC:IA
Stress Corrosion Cracking	Low Temperature Crack Propagation	SCC:LTCP
Stress Corrosion Cracking	Primary Water	SCC:PW
Stress Corrosion Cracking	Transgranular	SCC:TG

Westinghouse

Issue Management Table

15/62 Gaps Related to Reactor Internals

Inspection Related Gaps

1 I&E Guidelines: Reactor Internals
8 NDE Accessibility: Reactor Internals
20 UT Demonstration: Baffle Bolting
32 NDE Capability: Void Swelling (Identification & Characterization)
33 NDE Capability: Baffle Former Assembly IASCC
43 NDE Capability CRGT Support Pins

Degradation Related Gaps

10 Thermal & Irradiation Embrittlement: Synergistic Effects on CASS & SS Welds
16 Fluence Impact on SCC of Stainless Steels
18 High Cycle Fatigue - Internals
23 PWSCC Management: Ni-Alloy Reactor Internals
28 Fatigue Environmental Effects: Reactor Internals
31 Assess Void Swelling & Stress Relaxation Significance: PWR Reactor Internals
35 Wear & High Cycle Fatigue: Steam Generator Tubes & Internals

General Assessment Gaps

25 Baffle Bolting Assessment
49 Irradiation Effects: Ni Alloys (Reactor Internals)

Westinghouse

The I&E Guidelines
- Based on Exhaustive Screening Process

- Inspection Guidelines:
  - What to inspect
  - When to inspect
- Evaluation Guidelines
  - What is acceptable
  - What do we do?
    - Mitigate
    - Repair
    - Replace

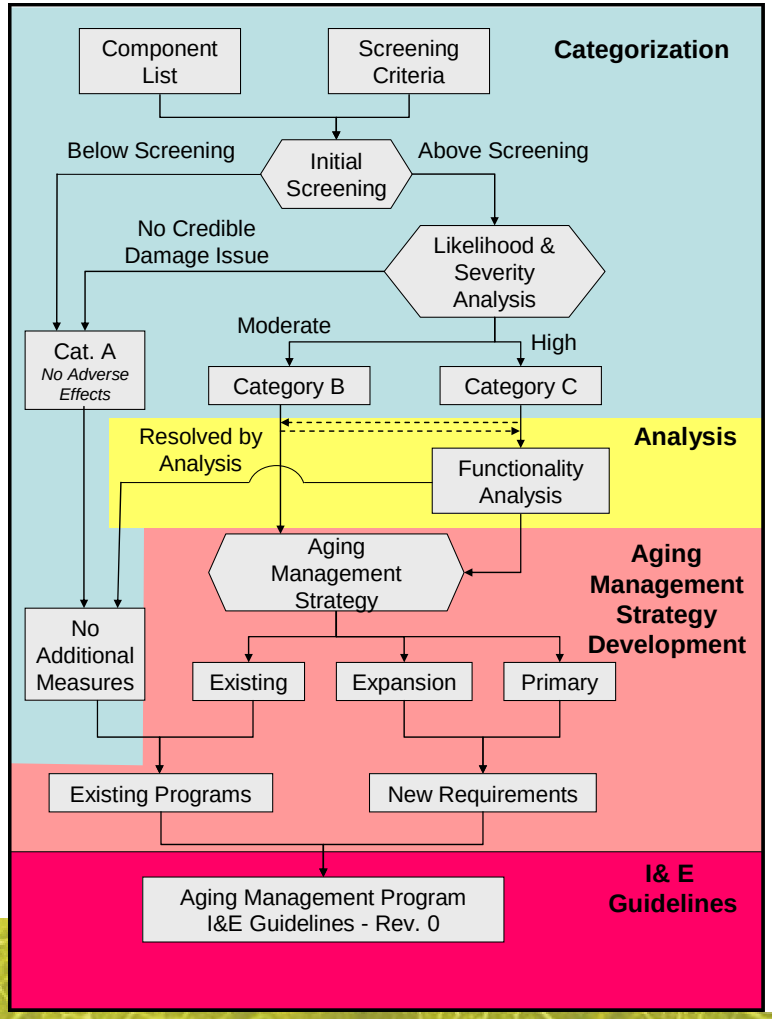

Westinghouse

Functionality Analysis
- A Multi-Discipline Effort

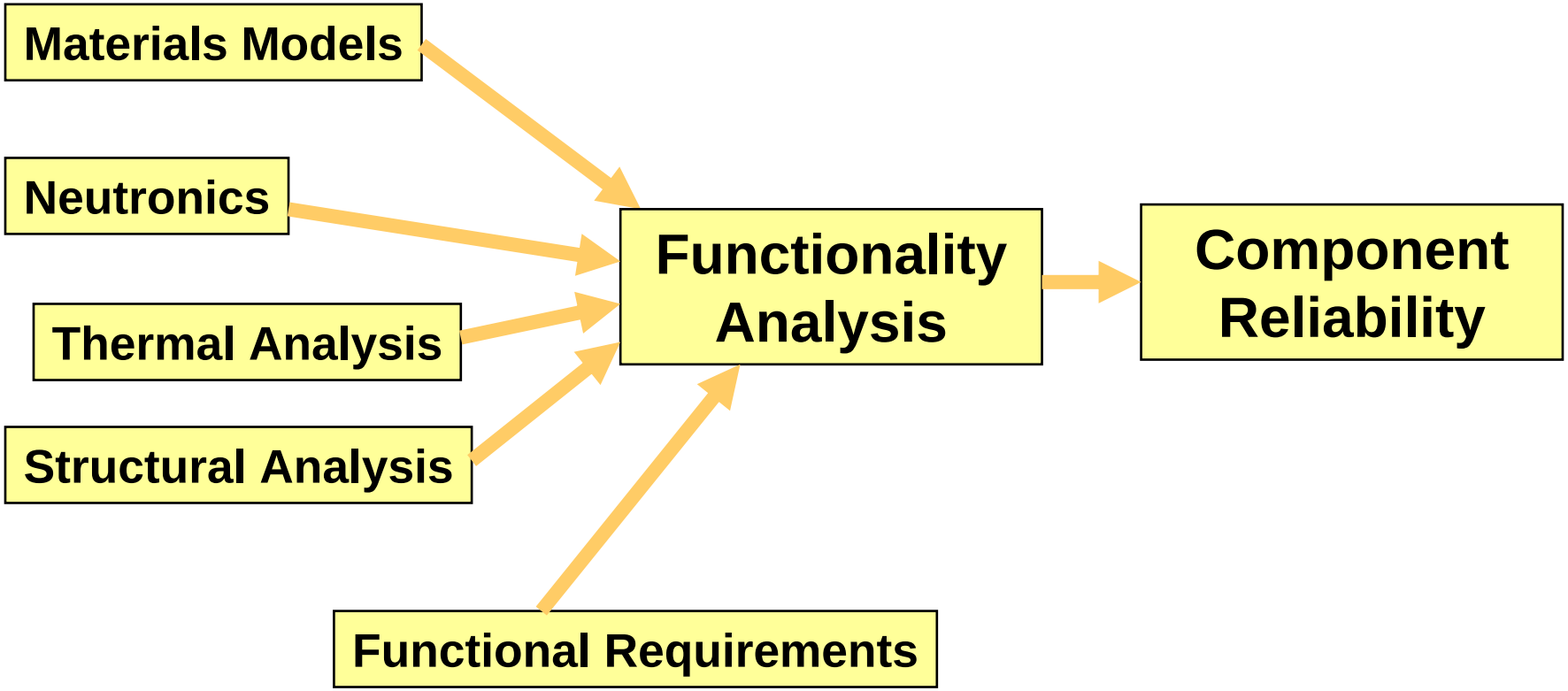

Westinghouse

The Cracking Mechanisms

- SCC (Stress & Environment)
- IASCC (Irradiation, Stress & Environment)
- Fatigue (Transient Loading, Environment?)

Produce observable cracks
Most probable in regions of stress concentration

Westinghouse

The Embrittlement Mechanisms

- Irradiation Embrittlement (Dose & Temperature)
- Thermal Embrittlement (Time, Temperature & Composition)

Changes in material properties

Westinghouse