NUS-301
(VOLUME I)

RADIOLOGICAL CONTROL PROCEDURES APPLICABLE TO RADIOISOTOPE THERMOELECTRIC GENERATOR SNAP-27

VOLUME 1

NORMAL OPERATIONS

By

Luis F. Garcia
Senior Technical Associate

And

Harry W. Calley
Technical Associate

NUS CORPORATION

September 12, 1966

NUS CORPORATION
1730 M Street, N. W.
Washington, D.C. 20036

GENERAL ELECTRIC
COMPANY

MISSILE AND
SPACE DIVISION

VALLEY FORGE SPACE TECHNOLOGY CENTER (MAIL: P. O. BOX 8555, PHILA., PA. 19101) . . TEL. 969-2000

January 4, 1967

cc: C. Nemec

Enclosures: 1. NUS-301 (Volume I) Radiological Control Procedures Applicable to Radioisotope Thermoelectric Generator SNAP-27, Normal Operations

2. NUS-301 (Volume II) Radiological Control Procedures Applicable to Radioisotope Thermoelectric Generator SNAP-27, Radiological Emergencies

TO DISTRIBUTION;

At the time of preparation of enclosures 1 and 2 the SNAP-27 fuel capsules were to be handled as special nuclear material under a license granted by the AEC Division of Regulations. The information in these reports is consistent with the regulations in Title 10 Code of Federal Regulations as required for licensed material.

A license exemption has been granted for the SNAP-27 and therefore radiological safety will be reviewed by the AEC/ALO Operational Safety Division Office. The radiation exposure limits in enclosures 1 and 2 are lower than that found in the AEC/ALO Operational Safety Division Office directives, while the enclosure 1 and 2 regulations do not comply fully with the AEC/ALO directives.

The enclosures are submitted for your information since much of the information remains applicable to the SNAP-27 Program.

Very truly yours,

T. F. Widner

NUS-301
(Volume I)

RADIOLOGICAL CONTROL PROCEDURES APPLICABLE TO RADIOISOTOPE THERMOELECTRIC GENERATOR SNAP-27

VOLUME I
NORMAL OPERATIONS

By

Luis F. Garcia
Senior Technical Associate

and

Harry W. Calley
Technical Associate

September 12, 1966

Approved Morton I. Goldman
Vice President
Environmental Safeguards Div.

Approved George H. Anno
Project Engineer, SNAP-27

TABLE OF CONTENTS

		Page
1.	GENERAL	1
1.1	Scope	1
1.2	Responsibility	1
1.3	The SNAP-27	1
1.3.1	General Description	1
1.3.2	Radiological Factors	12
1.4	Training	14
2.	PERMISSIBLE DOSES, LEVELS, AND CONCENTRATIONS	15
2.1	Permissible Doses	15
2.1.1	Occupational Exposure	15
2.1.2	Minors within a Restricted Area	16
2.1.3	Individuals in Unrestricted Areas	16
2.2	Permissible Levels	16
2.2.1	Dose Rates	16
2.2.2	Surface Contamination	17
2.3	Permissible Concentrations	18
3.	HANDLING AND STORAGE -- PRECAUTIONARY PROCEDURES	18
3.1	Instruction of Personnel and Posting of Notices to Employees	18
3.1.1	Instruction of Personnel	18
3.1.2	Posting of Notices	19
3.2	Classification of Areas and Posting Requirements	20
3.2.1	Radiation Symbol	20
3.2.2	Unrestricted Area	21

LIST OF TABLES

Table No.	Title	Page
1.1	TOTAL GAMMA AND NEUTRON DOSE RATES FROM SNAP-27 COMPONENTS	13
1.2	RELATIVE HAZARD PER UNIT MASS OF PLUTONIUM FUEL AS A FUNCTION OF CRITICAL ORGAN	14

LIST OF FIGURES

Figure No.	Title	Page
1	SNAP-27/ALSEP Subsystems Deployed on Lunar Surface (Artist's Conception)	3
2	SNAP-27 Generator Assembly	5
3	SNAP-27 Mechanical Integration Mockup Components	6
4	Removal of Fuel Capsule From LEM Fuel Cask	8
5	Removal of ALSEP Equipment Containers	8
6	Packaging Concept for SNAP-27/ALSEP Components	9
7	Fuel Capsule Locking System and Handling Tool	11

		Page
3.2.3	Restricted Area	21
3.2.4	Radiation Area	21
3.2.5	High Radiation Area	22
3.2.6	Airborne Radioactivity Area	23
3.2.7	Storage and Operational Areas	23
3.2.8	Radioactive Material Containers	24
3.2.9	Exceptions from Posting Requirements	24
3.2.10	Exemptions for Radioactive Material Packaged for Shipment	25
3.3	Personnel Monitoring	25
3.4	Surveys	26
3.4.1	Dose Rate Measurements	26
3.4.2	Surface Contamination Checks	27
3.4.3	Airborne Radioactivity Measurements	28
3.4.4	Hazards Evaluation for Special Tests of SNAP-27	29
3.5	Leak-Testing of Sealed Source	29
3.6	Source-Capsule Loading/Removal Operations	30
3.7	Storage	33
3.8	Decontamination	34
3.9	Radioactive Waste	35
4.	TRANSPORT -- RECAUTIONS AND REGULATIONS	35
4.1	Within Custodial Activity	35
4.2	Shipment to Off-Site Activity	36
5.	RECORDS, REPORTS, AND NOTIFICATIONS	43
5.1	Personnel Monitoring	43

		Page
5.1.1	Personnel Monitoring Records	43
5.1.2	Notice to Employees of Exposure to Radiation	44
5.1.3	Overexposures	44
5.1.4	Report to Former Employees of Exposure to Radiation	44
5.2	Surveys	45
5.3	Leak-Testing of Sealed Source	45
5.4	Receipt, Inventory, and Transfer	46
5.5	Disposal of Radioactive Waste	46
5.6	Notifications of Incidents	46
5.6.1	Immediate Notification	46
5.6.2	Twenty-Four Hour Notification	47
5.7	Reports of Theft or Loss of Radioactive Material	48
5.8	Reports of Overexposures and Excessive Levels and Concentrations	48
5.8.1	Atomic Energy Commission	48
5.8.2	Individual	49
5.9	Report of Shipping Container Failure	49
REFERENCES		50
GLOSSARY		52
APPENDICES		
Appendix A -	Concentrations in Air and Water Above Natural Background	58
Appendix B -	United States Atomic Energy Commission Compliance Offices	59

1. GENERAL

1.1 Scope

This volume contains the radiological control procedures applicable to the normal transport, handling, and storage of the radioisotope thermoelectric generator SNAP-27 prior to launching. The procedures and limits contained herein are based on the standards of the Atomic Energy Commission and other appropriate regulatory agencies. The contents of this manual are intended to serve as a guide for the preparation of specific instructions by the SNAP-27 custodial activities concerned. Emergency procedures are contained separately in Volume II.

1.2 Responsibility

Each SNAP-27 custodial activity is responsible for the preparation of its specific instructions for assuring compliance with the radiation protection standards specified herein. Specific authority and responsibilities of named individuals will be as specified in such instructions.

1.3 The SNAP-27

1.3.1 General Description. The SNAP-27 is a radioisotope fueled thermoelectric power supply being developed by the General Electric Company for the Atomic Energy Commission. This SNAP-27 generator, providing a minimum of 56 watts of DC power, will be used as the electrical power generation subsystem on the Apollo Lunar Surface Experiment Package (ALSEP) which is being developed for the NASA Manned Spacecraft Center. The ALSEP is a package of instruments and supporting subsystems that will be placed on the lunar surface by the astronaut and will transmit lunar geophysical information for a period of at least one year after departure of the spacecraft.

The objectives of the Apollo Program are the landing of men on the moon, limited observation and exploration of the moon by the crew, and return to earth. In addition to carrying lunar geological equipment and using this equipment on the surface, the astronaut will set up and activate the ALSEP which will be left on the lunar surface to transmit data after the astronauts have left the moon as shown in Figure 1. The SNAP-27 power subsystem will provide the electrical power for the ALSEP.

Prior to delivery of the flight unit, a total of fifteen full-scale generators and five mock ups will be built and tested. These will be used for generator prototype development, qualification testing, life testing, astronaut training, and various system integration tests to be performed by the Manned Spacecraft Center and its ALSEP contractor. In parallel with the fabrication and testing of prototype and qualification generators, an extensive program of component development testing is being carried out to fully verify the design.

The present design weight of the fueled generator assembly including connecting cable and connections is approximately 38.6 pounds. The raw electrical output of the generator is a minimum of 56 watts.

The design of the fuel capsule heat protection system for the SNAP-27 RTG will permit the capsule to survive an abort from earth orbit and land intact without dispersing radioactive materials within the biosphere. This is the first aerospace SNAP program where the safety requirements dictate intact re-entry of the fuel capsule and an extensive series of arc tunnel heat transfer and aerodynamic tests are being performed to establish the reliability of the re-entry shield configuration.

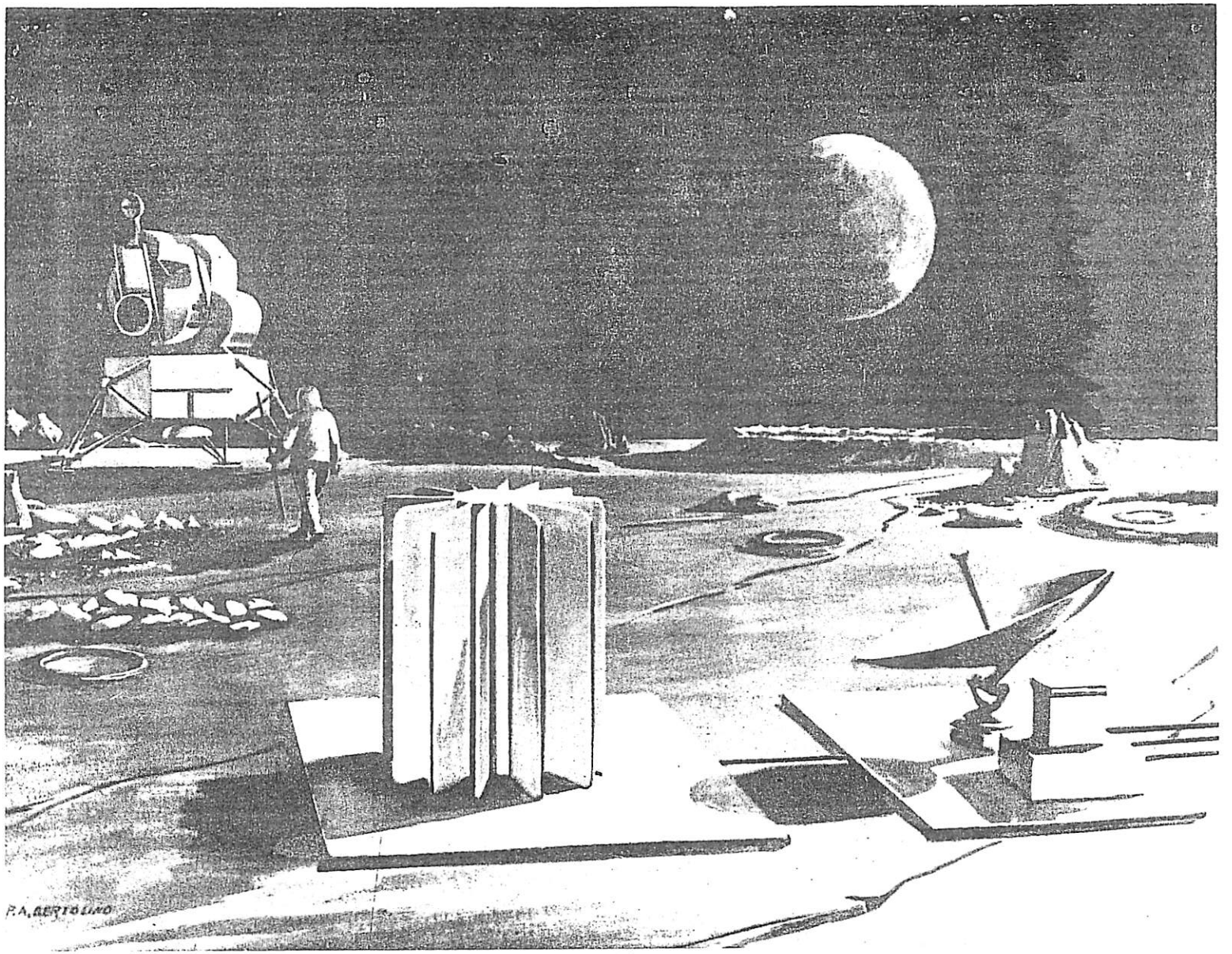

Figure 1. SNAP-27/ALSEP Subsystems Deployed on Lunar Surface (Artist's Conception)

Figure 2 indicates the SNAP-27 RTG assembly and Figure 3 presents mockup models of the RTG showing fuel capsule insertion with handling tool, the Lunar Excursion Module (LEM) fuel shipping cask, the fuel capsule handling tool, and the fuel capsule and generator and plate.

The SNAP-27 generator will be transported to the lunar surface within the scientific equipment bay of the Lunar Excursion Module (LEM) descent stage. The fuel capsule (heat source) will be transported to the moon in a separate protective cask, mounted on the LEM vehicle. This fuel cask will contain re-entry heat shielding which will assure intact re-entry from earth orbit. Thus, the generator will be transported to the moon in an unfueled condition (no electrical power output is required during transport). After lunar landing, the ALSEP and SNAP-27 generator will be extracted from the LEM by one member of the crew, and carried to a location that provides optimum placement of the equipment and sensors. Generator fueling will be accomplished either prior to or after final placement on the lunar surface and the ALSEP operation will then begin.

The decision by the NASA to fuel the generator on the moon, rather than to carry a hot (fueled) generator within the LEM scientific equipment bay, was based on the following factors:

a. It is difficult to provide adequate heat removal for a fueled generator within the LEM equipment bay during the launch and lunar transit periods when the generator heat rejection fins have a poor view of space.

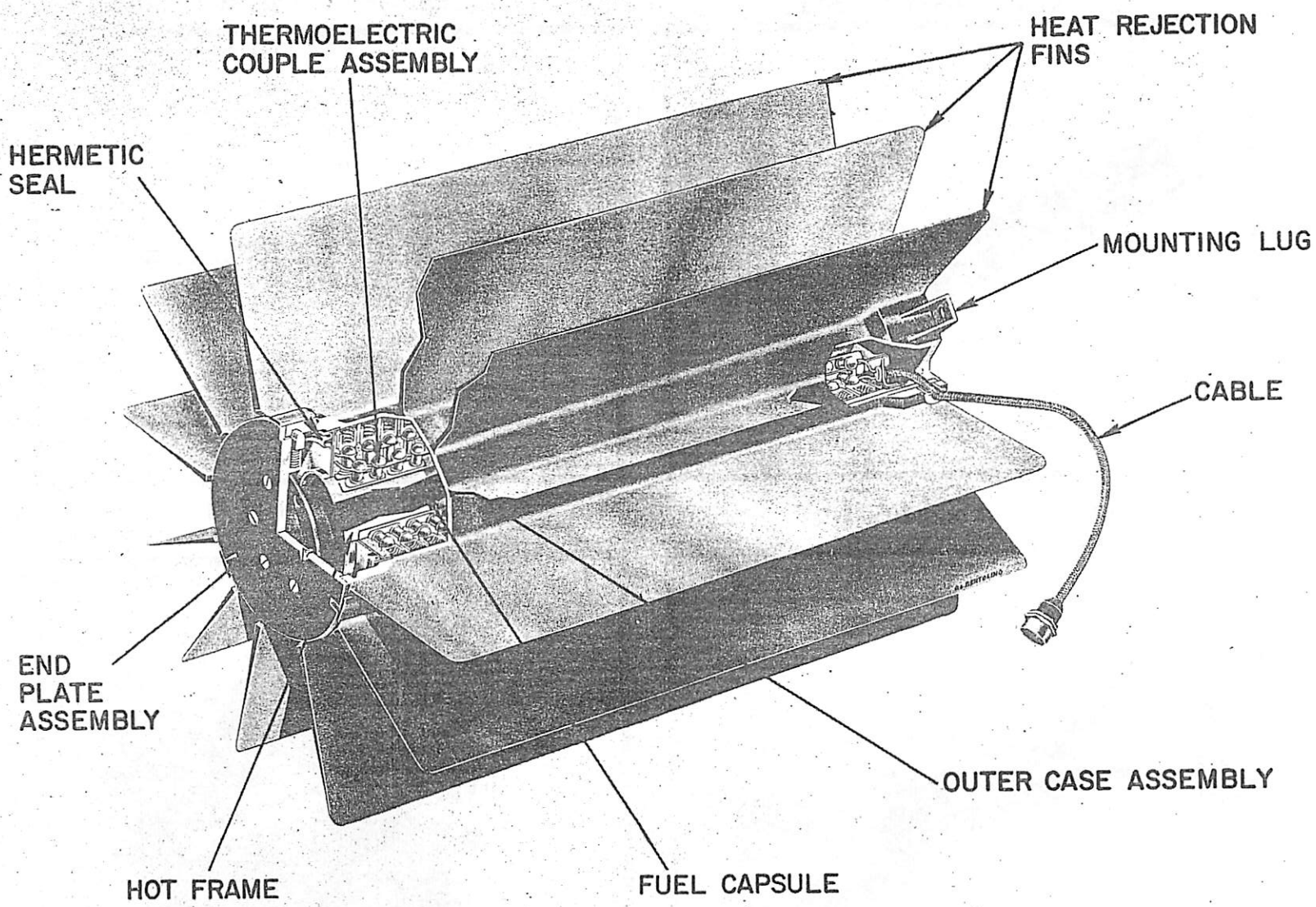

Figure 2. SNAP-27- Generator Assembly

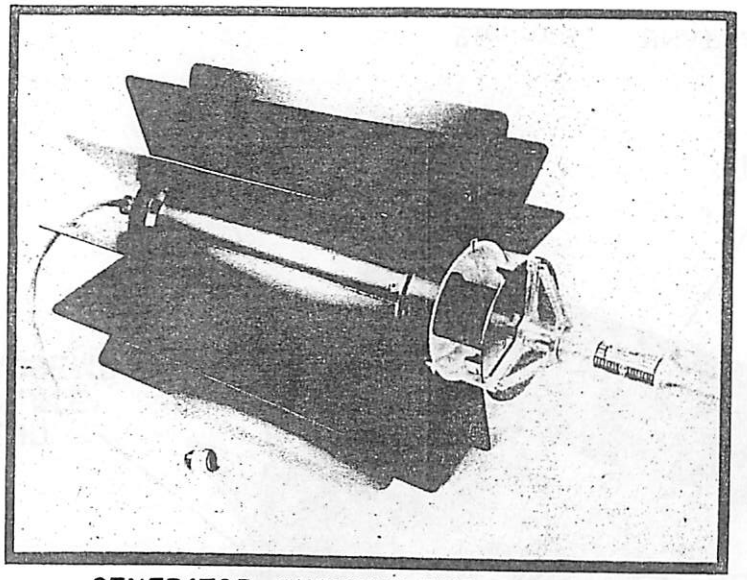

GENERATOR SHOWING FUEL CAPSULE INSERTION WITH HANDLING TOOL

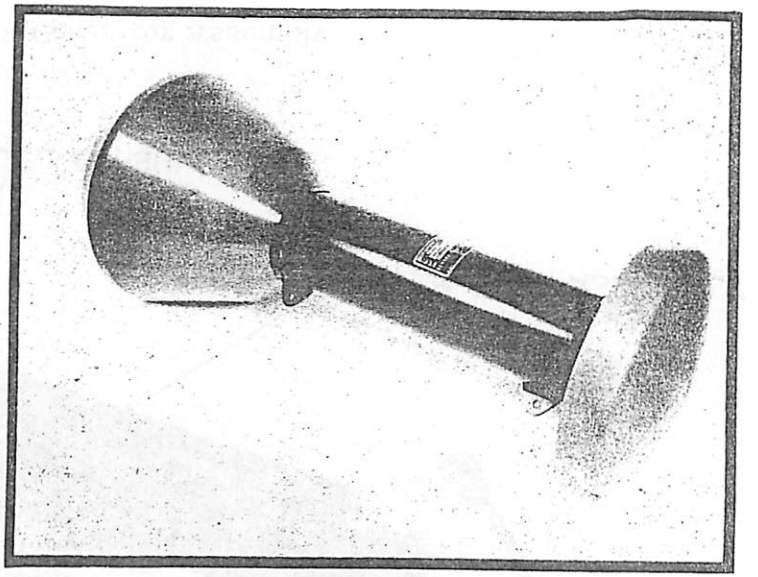

LEM FUEL SHIPPING CASK

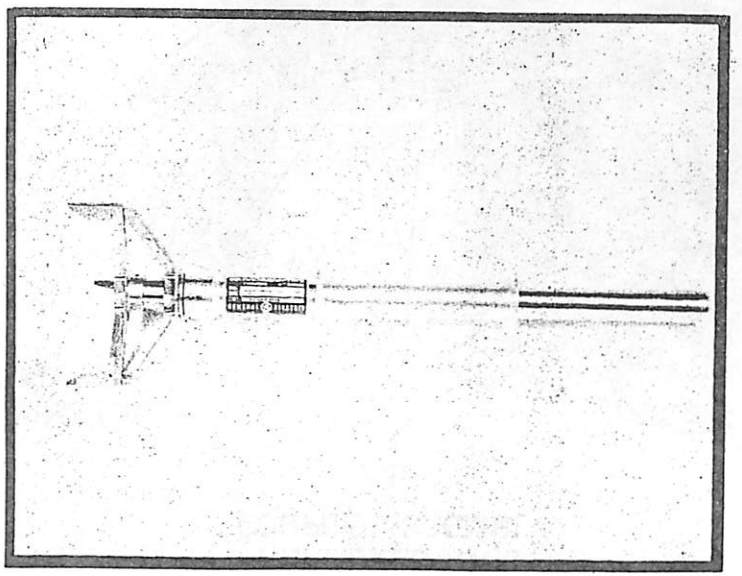

FUEL CAPSULE HANDLING TOOL

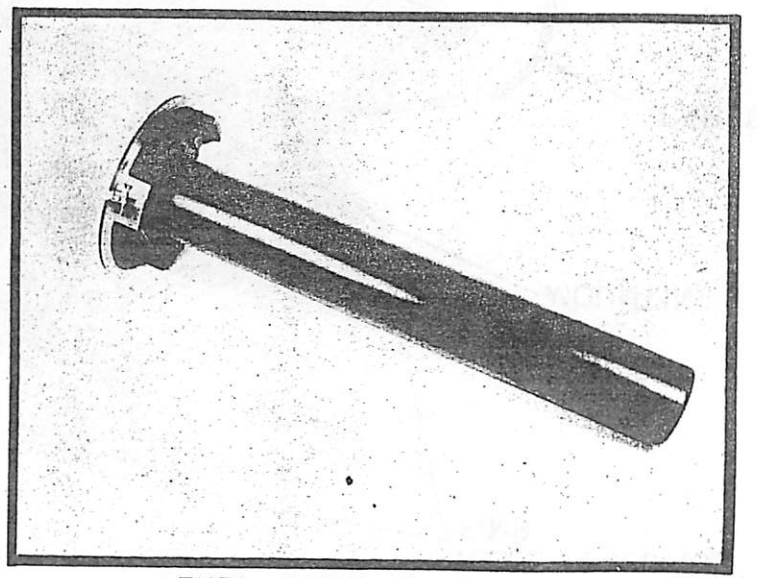

FUEL CAPSULE AND GENERATOR END PLATE

Figure 3. SNAP-27 Mechanical Integration Mockup Components

b. Astronaut safety considerations favor the handling of a cold generator on the moon to prevent high temperature fin surfaces from coming into contact with the astronaut's pressure suit. Thermal surface temperatures of the capsule will present a burn hazard to personnel during all phases of its handling.

c. The simplification of the interfaces between the ALSEP, SNAP-27, and the LEM vehicle, afforded by the use of a separately-shipped fuel capsule, permits greater flexibility in design and stowed equipment arrangement.

Figures 4 through 6 are artist's conceptions of possible lunar handling and deployment schemes for the SNAP-27/ALSEP/equipment. Figure 4 shows the removal of the fuel capsule from the LEM fuel cask, which is mounted outside the scientific equipment bay. The cask is rotated to the horizontal position and the hot capsule is withdrawn by means of a fuel capsule handling tool. The radiation from the exposed capsule is primarily low level neutron and gamma radiation and the total dose rate will be approximately 54 mrem/hr at 1 meter from the fuel capsule.

Figure 5 shows the removal of the ALSEP equipment containers from the LEM, while the fuel capsule is temporarily suspended from the LEM landing structure. A possible packaging concept for one of the equipment containers is illustrated in Figure 6 where the unfueled generator is mounted to a honeycomb panel that also serves as the lunar mounting platform. The box structure attached to the base contains other ALSEP components mounted on the sides and top. After removal of the box, it could be carried to the final site, thus avoiding an extra trip to and from

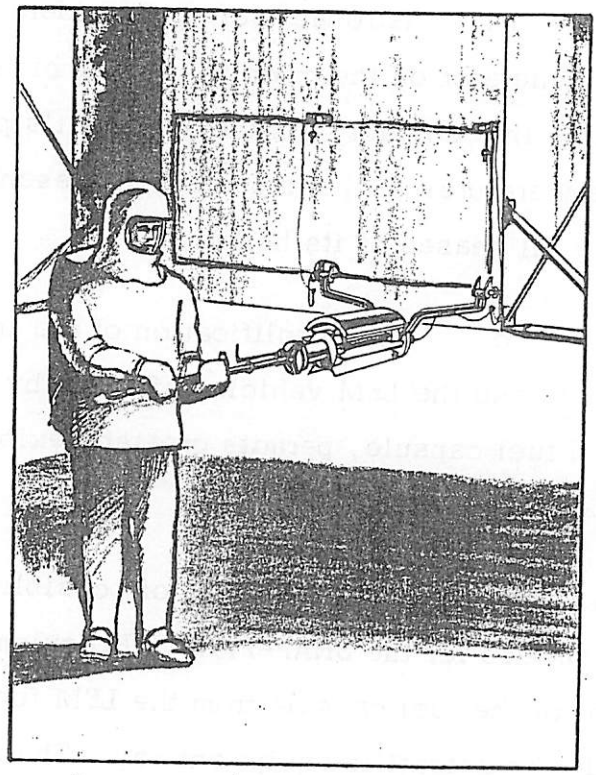

Figure 4. Removal of Fuel Capsule From LEM Fuel Cask

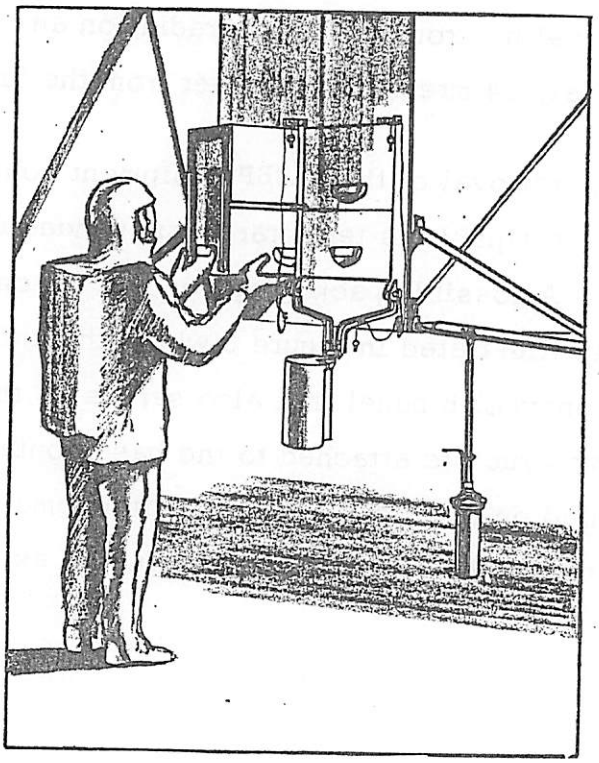

Figure 5. Removal of ALSEP Equipment Containers

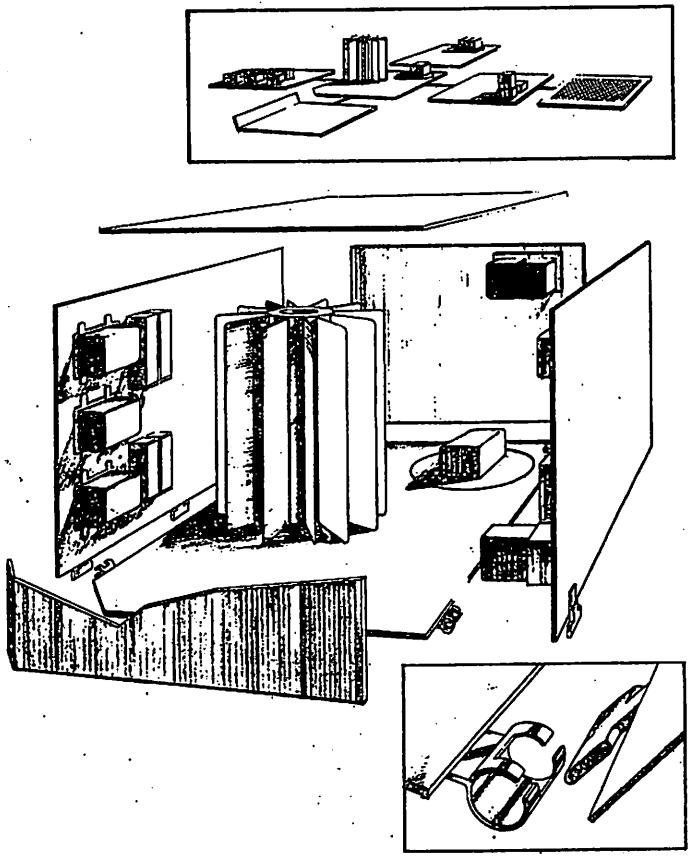

Figure 6. Packaging Concept for SNAP-27/ALSEP Components

LEM to obtain the fuel capsule. At least 25 minutes are required for the generator external surface to rise 200°F above ambient temperature after fuel insertion, and the fueled package could be carried by the crew member within this time interval. The tool used for the fueling operation (see Figure 7) is simple and uses only linear motion for locking and removal. Since large clearances are provided between the fuel capsule and the generator fuel cavity, a very high reliability can be associated with the fueling operation.

The high heat rejection temperature of the generator requires that care be taken in the placement of heat-sensitive electronic components immediately adjacent to the heat rejection surfaces. Large adjacent surfaces which block the generators view of space also affect its ability to reject heat and cause a rise in radiator temperature. Objects as large as the generator itself will cause less than a 10°F rise in radiator temperature if kept at least 2 feet away from the generator. Heat input to adjacent components from the generator can generally be kept reasonably low by:

a. A separation distance of several feet,

b. Orienting the surface with minimum area towards the generator (low view factor), and

c. Applying a low absorptivity/high emissivity coating to the exposed surface.

Thermal integration problems between the SNAP-27 and ALSEP on the lunar surface are expected to be minimal because of the flexibility allowed in equipment placement.

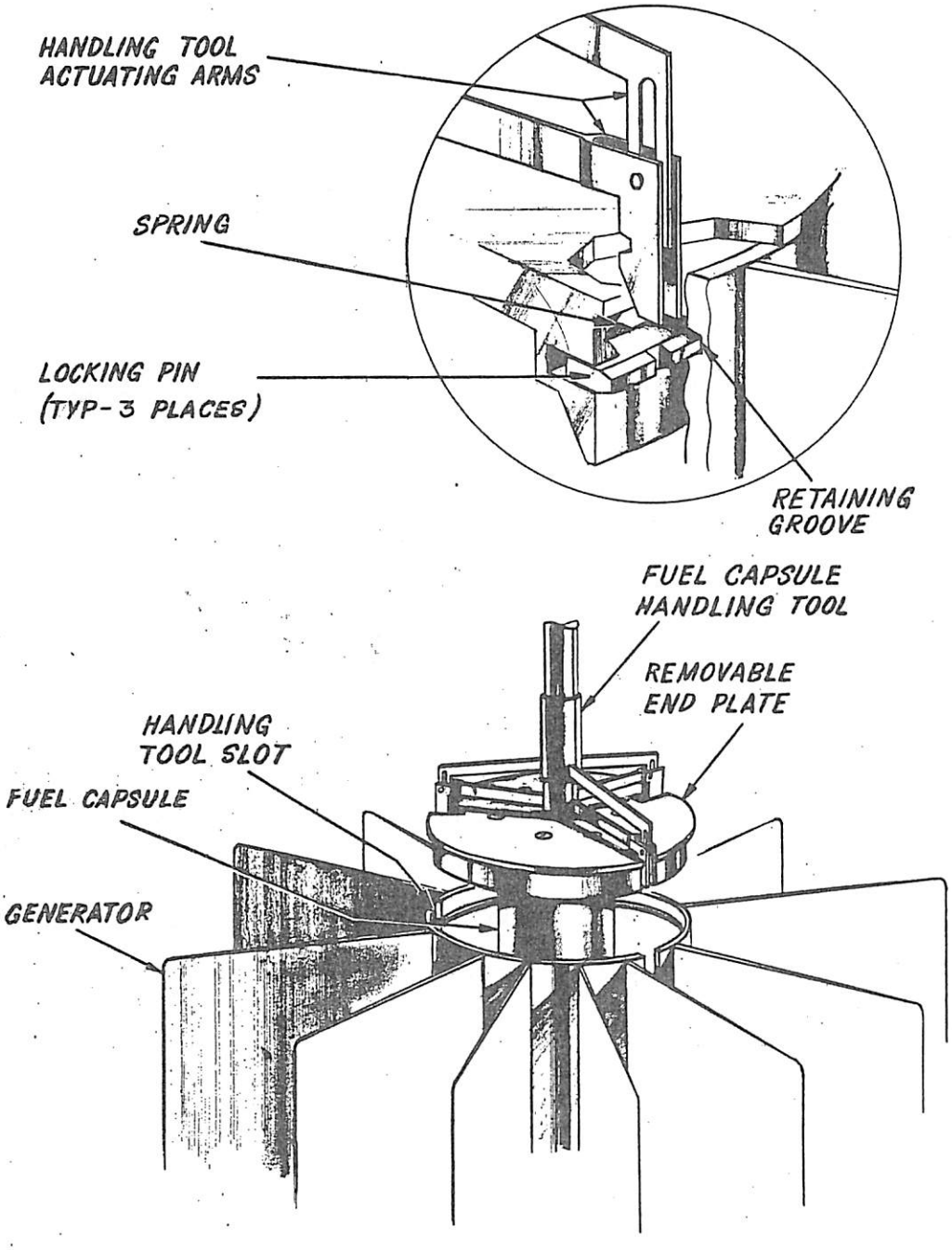

Figure 7. Fuel Capsule Locking System and Handling Tool

1.3.2 Radiological Factors. The SNAP-27 fuel is composed of fissionable material which contains radioisotopes which principally emit alpha, gamma, and neutron radiations. It, therefore, presents the following potential radiological hazards.

a. Accidental Criticality. All fissionable materials are an inherent criticality hazard. The degree of hazard is a function of many factors such as mass, geometry, moderation, reflection, poisons, etc. Since the mass of fissionable material in a SNAP-27 fuel capsule is considerably less than (approximately 1/5) the minimum mass required to achieve criticality under optimum conditions of geometry, and reflection, and in view of the handling and storage restrictions, the probability of an accidental criticality is considered too remote to be classified as a hazard in this manual.

b. External Radiation Exposure. The gamma radiation emitted by the SNAP-27 fuel capsule originates from the fuel material isotopes and their decay products, fission products resulting from spontaneous fission of the fuel, radioactive impurities in the fuel and from the interaction of alpha particles with oxygen. The gamma energy spectrum of pure fuel material is predominantly a low energy spectrum (0.04 to 0.50 MEV). Because of the long half-lives and/or small quantities of other radioactive impurities, these isotopes do not contribute significantly to the gamma activity of a SNAP-27 fuel capsule.

The small penetrating power of the alpha particles emitted eliminates them from the potential sources of external radiation exposures. The neutron radiation emitted will consist principally of neutrons from the γ, n reaction with oxygen and from spontaneous and induced fission of the fuel material.

The combined neutron and gamma dose rates anticipated from the SNAP-27 components are shown in Table 1.1.

TABLE 1.1

TOTAL GAMMA AND NEUTRON DOSE RATES FROM SNAP-27 COMPONENTS

Component	mrem/hr at 1 meter from center	
	radially	axially
Bare fuel capsule	54	42
Generator	50	42
LEM cask	54	42
Ground shipping container	20	20

c. Internal Radiation Exposure. The long biological half-life, the high energy and specific ionization in tissue of the emitted alpha particles, and the body's selective localization of the SNAP-27 fuel material in the bone combine to result in very low (0.04 to 0.9 μCi) permissible body burdens for these radionuclides.

The alpha particles emitted by the source material, when the source material is deposited within the body, are the major contributing source of internal exposure.

Internal deposition of SNAP-27 fuel material and the resulting internal exposure to critical organs due principally to alpha particle emission is considered to be the most significant hazard associated with the accidental release of this material. Routes of entry and exposure to critical organs are discussed later.

It can be noted from Table 1.2 that in terms of hazards to the critical organs, only Pu-238 appears to be significant. The relative hazards from the remaining isotopes are orders of magnitude less important.

TABLE 1.2

RELATIVE HAZARD PER UNIT MASS OF PLUTONIUM FUEL AS A FUNCTION OF CRITICAL ORGAN

Isotope	Fuel Comp. Wt.%	Critical Organ		
		Lung	Bone	G.I. Tract
Pu-238	0.80	1.0	1.0	1.0
Pu-239	0.165	7.0×10^{-4}	2.3×10^{-3}	7.0×10^{-4}
Pu-240	0.025	4.0×10^{-4}	1.3×10^{-3}	4.0×10^{-4}
Pu-242	0.008	6.0×10^{-6}	7.0×10^{-5}	1.3×10^{-4}
Pu-243	0.0008	———	———	———

1.4 Training

Prior to handling and using SNAP-27 fuel capsules, all personnel should receive basic indoctrination and training in the hazards associated with radioactive material and the methods for minimizing these hazards.

Such a training program is intended to increase worker proficiency and should include the following topics as a minimum:

a. Characteristics of radiation,

b. Fundamentals of radiation safety,

c. Biological effects of radiation,

d. Maximum permissible exposures,

e. Methods of controlling exposures,

f. Description and use of protective clothing and equipment,

g. Description and use of radiation detection instrumentation and equipment,

h. Survey techniques,

i. Normal operating procedures,

j. Emergency procedures.

2. PERMISSIBLE DOSES, LEVELS, AND CONCENTRATIONS

2.1 Permissible Doses

2.1.1 Occupational Exposure. Transport, handling and storage of a SNAP-27 shall be carried out in such a manner as to assure that any individual within a restricted area does not receive a dose in excess of the limits specified below -- such a dose being that due to radiations from the SNAP-27 and from any occupational exposures received from other radiation sources of the custodial activity. Exposures received for medical purposes -- e.g. diagnostic or therapeutic -- are excluded from these limits.

REMS PER CALENDAR QUARTER

a. Whole body; head and trunk; active blood-forming organs; lens of eyes; or gonads------- 1.25 rems

b. Hands and forearms; feet and ankles--------- 18.75 rems

c. Skin of whole body---------- 7.50 rems

Provisions should be made for increasing the whole body exposure limit to 3.0 rem per calendar quarter when the increase is considered necessary and has been authorized by the Radiological Safety Officer in compliance with Section 20.101, Paragraph (b), of 10CFR20.

Note: To assure that the exposure limits are not exceeded, it is generally desirable for an activity to adopt a shorter, operational control period, e.g. one week (7 continuous calendar days) or one day. On this basis, for example, the operational control limits for whole body occupational exposure would be 100 millirems per week; or 20 millirems per day.

2.1.2 Minors within a Restricted Area. Minors (i.e., persons under 18 years of age), shall not be allowed to receive an exposure in excess of 10 per cent of the limits specified in paragraph 2.1.1 (a), (b) and (c).

2.1.3 Individuals in Unrestricted Areas. Any individual in an unrestricted area shall not receive a dose to the whole body in any period of one calendar year in excess of 0.5 rem.

2.2 Permissible Levels

2.2.1 Dose Rates

a. Restricted Area. See Section 3.2 below.

b. Unrestricted Area. Transfer, handling, and storage of a SNAP-27 shall be performed in such a manner that the combined (gamma plus neutron) dose rate in any unrestricted area, from the SNAP-27 radioactive material and other sources of radiation in the custodian's possession, shall not exceed:

(1) Radiation levels which, if any individual were continuously present in the area, could result in his receiving a dose in excess of two millirems in one hour; or

(2) Radiation levels which, if an individual were continuously present in the area, could result in his receiving a dose in excess of 100 millirems in any seven consecutive days.

c. Miscellaneous. Other dose rate limits are specified in the appropriate sections below.

2.2.2 Surface Contamination. The radioactive material of the SNAP-27 is securely contained in a sealed capsule. Furthermore, encapsulation specifications require that all external surfaces of the sealed source be free of contamination. Therefore, under normal conditions there should be no contamination, either loose or fixed, on the source itself or on surfaces of items coming in direct or indirect contact with the source. However, if the limits indicated below are exceeded for general surface areas (floors, bench tops, etc.), an immediate evaluation of the radiological condition of the capsule is required in order to take necessary action in timely fashion. See Volume II.

SURFACE CONTAMINATION GUIDES

Detection Method	Limit
(a) Alpha survey meter	Non-detectable above background
(b) Beta-Gamma Survey Meter	0.1 MREM/hr
(c) Smear wipes	5 $\mu\mu$Ci/100 cm^2
	450 $\mu\mu$Ci/100 cm^2

Note: Limits applicable to specific functions (e.g. leak-testing of capsule) are indicated in the appropriate sections below. Other guidance limits are specified in Volume II.

2.3 Permissible Concentrations

Since the radioactive material of the SNAP-27 is contained in a sealed source, no radioactive material is expected to leak from the source under normal conditions of transfer, handling, and storage. The limits specified in Appendix A are presented here for guidance purposes and for purposes of defining and evaluating emergency situations. Use of these limits shall be in accordance with applicable provisions of 10-CFR20. See Volume II.

3. HANDLING AND STORAGE -- PRECAUTIONARY PROCEDURES

3.1 Instruction of Personnel and Posting of Notices to Employees

3.1.1 Instruction of Personnel. All individuals working in or frequenting any portion of a restricted area shall be:

a. Informed of the existence of radioactive material and of the radiation levels in the restricted area;

b. Instructed in the radiological safety problems associated with exposure to the radiation from the source(s) concerned and in the precautions and procedures to minimize exposure;

c. Instructed in applicable provisions of AEC regulations and interagency agreements.

d. Advised of radiation exposure reports which employees may request in accordance with 10CFR20. See Section 5.1 below.

3.1.2 Posting of Notices.

a. Form AEC-3. Form AEC-3, "Notice to Employees", shall be conspicuously posted in a sufficient number of places to permit employees working in or frequenting any portion of a restricted area to observe a copy on the way to or from their place of employment.

Note: Copies of Form AEC-3, "Notice to Employees", may be obtained by writing to the Director of the appropriate Atomic Energy Commission Regional Compliance Office listed in Appendix B or the Director, Division of Licensing and Regulation, USAEC, Washington 25, D.C.

b. Miscellaneous. A copy of each of the following items shall be conspicuously posted so as to permit their being observed by employees concerned on their way to and from their place of employment, or such documents are to be made available for employee's examination upon request:

(1) Current copy of 10CFR20,

(2) Copy of applicable AEC interagency agreement,

(3) Copy of operating and emergency radiological control procedures applicable to the SNAP-27.

3.2 Classification of Areas and Posting Requirements

3.2.1 Radiation Symbol. All radiation caution signs, labels, etc., shall use the conventional three-bladed design and colors specified below:

RADIATION SYMBOL

1. Cross-hatched area is to be magenta or purple.

2. Background is to be yellow.

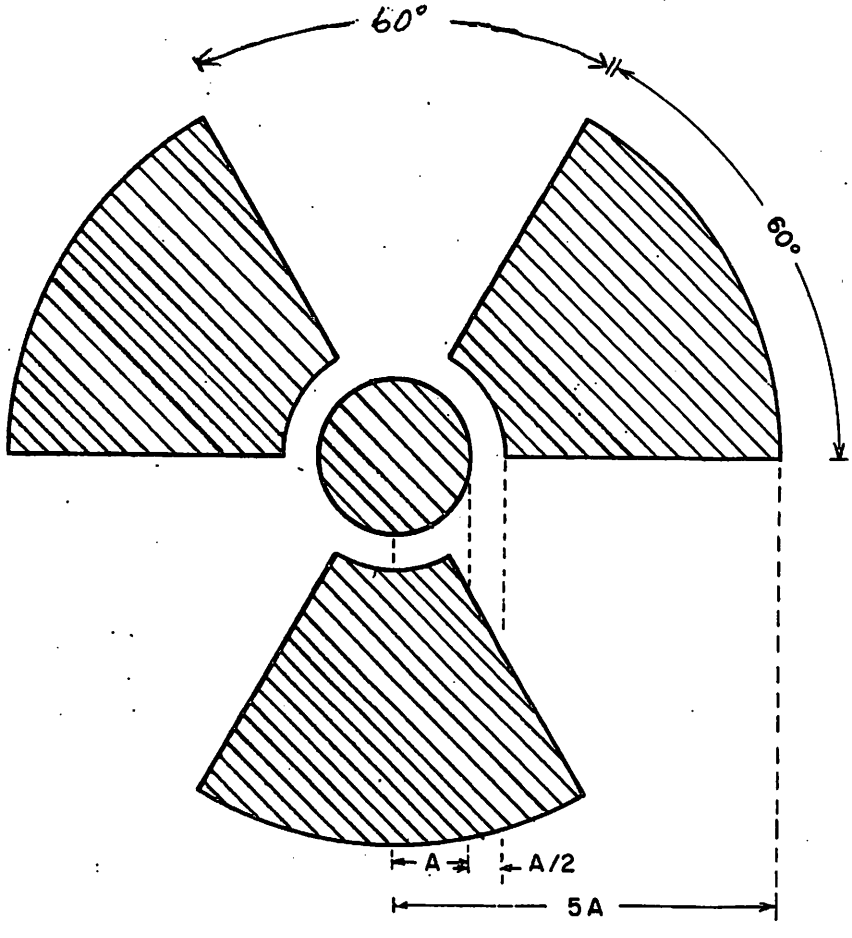

Any additional information which may be appropriate in aiding individuals to minimize exposure to radiation or to radioactive material may be provided on or near such signs and labels. Such information could include such items as:

a. Identification of source(s);

b. Dose rates at specified distances from source, or at areas of interest;

c. Persons to notify during work hours and during off-duty hours, and their telephone numbers and home addresses;

d. Date of last health physics survey of area; etc.

e. Personnel monitoring and/or protective clothing requirements.

3.2.2 Unrestricted Area. "Unrestricted Area" means any area access to which is not controlled by the custodial activity for purposes of protection of individuals from exposure to radiation and radioactive materials, and any area used for residential quarters.

3.2.3 Restricted Area. "Restricted Area" means any area access to which is controlled by the licensee for purposes of protection of individuals from exposure to radiation and radioactive materials. "Restricted Area" shall not include any areas used as residential quarters, although a separate room or rooms in a residential building may be set apart as a restricted area.

3.2.4 Radiation Area.

a. Definition. "Radiation Area" means any area, accessible to personnel, in which there exists radiation, originating in

whole or in part within radioactive material in SNAP-27 device(s), at such levels that a major portion of the body could receive in any one hour a dose in excess of 5 millirems, or in any 5 consecutive days a dose in excess of 100 millirems. In general, a radiation area is one in which the dose rate is between 2 1/2 and 100 millirem/hour.

b. Posting Requirement. Each radiation area shall be conspicuously posted with a sign or signs bearing the radiation caution symbol and the words:

CAUTION
RADIATION AREA

3.2.5 High Radiation Area.

a. Definition. "High Radiation Area" means any area, accessible to personnel, in which there exists radiation, originating in whole or in part within radioactive material in SNAP-27 device(s), at such levels that a major portion of the body could receive in any one hour a dose in excess of 100 millirems.

b. Posting Requirement. Each high radiation area shall be conspicuously posted with a sign or signs bearing the radiation caution symbol and the words:

CAUTION
HIGH RADIATION AREA

c. Control Device. Each high radiation area shall be equipped with a control device which shall either cause the level of radiation to be reduced below that at which an individual might receive a

dose of 100 millirem in one hour upon entry into the area or shall energize a conspicuous visible or audible alarm signal in such a manner that the individual entering and the custodian or a supervisor of the activity are made aware of the entry. In the case of a high radiation area established for a period of 30 days or less, such a control device is not required.

3.2.6 Airborne Radioactivity Area.

a. Definition. "Airborne Radioactivity Area" means:

(1) Any room, enclosure, or operating area in which airborne radioactive materials, composed wholly or partly of SNAP-27 radioactive material, exist in concentrations in excess of the amounts specified in Appendix A, Table 1, Column 1 of this manual.

(2) Any room, enclosure, or operating area in which radioactive material composed wholly or partly of SNAP-27 radioactive material exists in concentrations which, averaged over the number of hours in any week during which individuals are in the area, exceed 25 percent of the amounts specified in Appendix A, Table 1, Column 1, of this manual.

b. Posting Requirement. Each airborne radioactivity area shall be conspicuously posted with a sign or signs bearing the radiation caution symbol and the words:

CAUTION
AIRBORNE RADIOACTIVITY AREA

3.2.7 Storage and Operational Areas. In addition to the posting requirements listed above, each area or room in which the radioactive material capsule is used or stored shall be conspicuously posted with a sign or signs bearing the radiation caution symbol and the words:

CAUTION
RADIOACTIVE MATERIAL

3.2.8 Radioactive Material Containers. Each container in which SNAP-27 radioactive material is transported, stored, or used shall bear a durable, clearly visible label bearing the radiation caution symbol and the words:

CAUTION
RADIOACTIVE MATERIAL

For containers used for storage of a SNAP-27 fuel capsule the required labels shall state also the quantities and kinds of radioactive materials in the containers and the date of measurement of the quantities.

3.2.9 Exceptions from Posting Requirements.

a. A room or area is not required to be posted with a caution sign because of the presence of a sealed source provided the radiation level twelve inches from the surface of the source container or housing does not exceed five millirem per hour.

b. Caution signs are not required to be posted at areas or rooms containing radioactive materials for periods of less than eight hours provided that;

(1) The materials are constantly attended during such periods by an individual who shall take the precautions necessary to prevent the exposure of any individual to radiation or radioactive materials in excess of the limits specified in this manual and;

(2) Such area or room is subject to the control of the custodian activity.

3.2.10 Exemptions for Radioactive Material Packaged for Shipment

Radioactive material packaged and labeled in accordance with regulations of the Interstate Commerce Commission shall be exempt from the above labeling and posting requirements during shipment, provided that the inside containers are labeled in accordance with the provisions of paragraph 3.2.8.

3.3 Personnel Monitoring

Appropriate personnel monitoring equipment (film badge, dosimeter, film ring, etc.) shall be issued to, and shall be required to be used by:

a. Each individual who enters a restricted area and is likely to receive a dose in any calendar quarter in excess of 25 percent of the applicable value specified in paragraph 2.1.1 above.

b. Each minor (i.e. person under 18 years of age) who enters a restricted area and is likely to receive a dose in any calendar quarter in excess of 5 percent of the applicable value specified in paragraph 2.1.1 above.

c. Each individual who enters a high radiation area.

The film badges issued should contain film for measuring both beta-gamma and neutron exposures and other suitable methods for measuring high level gamma and neutron exposures such as microdosimeter glass rods and indium foil in the event of a criticality incident. Pocket dosimeters used for normal operations should be the self-reading type having a range of 200 mrem. Additional self-reading dosimeters having a range of 25 rem should also be available for measuring emergency exposures.

3.4 Surveys

3.4.1 Dose Rate Measurements

a. Handling and source-capsule loading/removal operations. Dose rate measurements for both gamma and neutron radiation shall be made at the various points of interest from the radioactive material of the SNAP-27, prior to, during, and following the operations -- as appropriate, in order to determine the exposure-time limits to assure that the applicable permissible doses specified in Section 2.1 are not exceeded.

b. Storage.

(1) Dose rate measurements for both gamma and neutron radiation shall be made within the restricted area, at various distances and in all directions from the radioactive source of the SNAP-27, in order to determine the boundaries of the "Radiation Area" and "High Radiation Area" and to carry out the posting requirements for such areas, as specified in paragraphs 3.2.4 and 3.2.5. Additionally, such measurements shall be made in all adjoining areas (including floors immediately above and below the source) to determine necessary actions to take (e.g. shielding) to prevent unnecessary exposure of personnel. Normal work areas adjacent to permanent storage areas should be below 0.1 millirem/hour.

Shelves, cubicles, or containers for storing SNAP-27 fuel capsules shall provide necessary spacing between units necessary to avoid criticality and include design features which preclude spacing patterns other than those intended.

c. Criticality Monitor. To meet the requirements of 10CFR70: Maintain in each area in which a SNAP-27 source capsule is

handled, used, or stored, a monitoring system, including gamma or neutron-sensitive radiation devices, which will energize clearly audible alarm signals in the event a condition of accidental criticality occurs which generates radiation levels of 300 rem per hour one foot from the source of the condition. The monitoring devices in the system shall have a pre-set alarm point of not less than 5 millirem per hour (in order to avoid false alarms) nor more than 20 millirem per hour. In no event may any such device be farther than 120 feet from a SNAP-27 source capsule being handled, used, or stored; lesser distances may be necessary to meet the requirements of this provision on account of intervening shielding or other pertinent factors.

3.4.2 Surface Contamination Checks

a. Source/Capsule Container. External surfaces of the radioactive source capsule or container shall be checked for evidence of contamination, as specified in paragraph 3.5 below.

b. Items Coming in Contact with SNAP-27. Items which have come in contact with the radioactive capsule of the SNAP-27 are to be considered as being contaminated and to be handled accordingly until proved otherwise by qualified personnel who check them by means of an alpha survey instrument and smear wipes.

c. General Surface Areas. Surfaces of table tops, floors, equipment, etc., in the immediate environs of the radioactive source shall be checked for contamination, by means of alpha survey instruments and smear wipes:

(1) Routinely, at intervals not to exceed one week; and

(2) Immediately after the source is transferred from the area.

If an area into which a SNAP-27 fuel capsule is to be transferred has previously been used to store or handle other radioactive materials, the background radiation and contamination levels of the area should be determined prior to the transfer.

d. In Case of Positive Results. Positive results from the above checks are to be considered indicative of an abnormal situation which requires immediate attention and evaluation. See Volume II.

3.4.3 Airborne Radioactivity Measurements

a. Measurements. Radioactivity measurements shall be made of airborne particulates in the general room air where the SNAP-27 is used, handled, or stored. These measurements should be carried out by means of a continuous air monitor (CAM) for alpha radioactivity. The CAM shall contain both visual and audible alarms, which shall be located in a normally occupied area. Such a CAM is not required if the period of the SNAP-27 in an area is less than 30 days. In lieu of the CAM, however, samples of airborne particulates in the area shall be periodically collected and assayed for alpha activity -- at intervals not to exceed one week.

b. In Case of Positive Results. Positive results (above natural airborne radioactivity) of these measurements are to be considered indicative of an abnormal situation which requires immediate attention and evaluation. See Volume II.

3.4.4 Hazards Evaluation for Special Tests of SNAP-27

a. Prior to conducting a special test (e.g. shock, vibration, environmental, etc.), in which the fuel capsule is subjected to conditions which may lead to the escape of SNAP-27, a special hazards evaluation of the specific test involved shall be made by qualified persons. Such an evaluation and plans for necessary engineered safeguards, radiation monitoring and controls, etc., shall be presented for review and approval of the individual holding final responsibility for radiological safety in the activity concerned.

b. The required engineered safeguards, radiation monitoring and controls, etc., shall be carried out prior to, during, and immediately following approved tests.

c. For emergency procedures, see Volume II.

3.5 Leak-Testing of Sealed Source

a. The sealed source of each SNAP-27 shall be tested for leakage of radioactive material, by means of the smear wipe technique. Preferably, the smears should be taken on the external surfaces of the source capsule itself. Depending on conditions, however, it may be considered sufficient to smear wipe accessible surfaces of the SNAP-27 fuel cask or converter in which the source is contained or has been recently contained.

b. Leak-testing is to be performed only by a qualified person who is thoroughly familiar with the radiological safety and other factors involved -- e.g. dose rates, thermal surface temperature of capsule, etc.

c. Frequency of Leak-Tests. Leak-testing of each SNAP-27 source capsule is to be performed:

(1) Prior to transferring it to another location.

(2) Upon its initial arrival at a new location.

(3) Prior to and immediately following special tests requiring a hazards evaluation. See paragraph 3.4.4 above.

(4) Periodically, at intervals not exceeding three months, when source is in a fixed location.

d. Leaking Source.

(1) The method of leak-testing a capsule should be uniform among facilities if a single activity limit is to be applied as the criterion for determining when a capsule is leaking.

Section 70.39 of 10CFR70 considers a source to be leaking if the results of the leak tests indicate surface activity in excess of 0.005 microcuries (1.1×10^4 dpm). Since this limit is well above the minimum detectable activity for alpha counting systems, it is advisable to select a lower limit in determining when a source capsule is leaking.

Therefore, a source capsule is to be considered leaking when the results of a leak test indicate 50 $\mu\mu$Ci or more of removable contamination.

(2) Action. If a source capsule is found to be leaking; carry out applicable emergency procedures contained in Volume II.

3.6 Source-Capsule Loading/Removal Operations

The following functions shall be carried out whenever the fuel capsule is to be removed from one container (Ground container, LEM fuel generator) to another:

a. Thoroughly review specific procedures for the operation, as provided with the SNAP-27. Fully brief all individuals involved, and become thoroughly familiar with special tools required. Perform "dry runs" as necessary -- taking into account minimum working distances and exposure-time restrictions based on anticipated dose rates.

b. Issue appropriate type film badges and self-reading dosimeters to each individual to be involved in the operation. In addition to a whole body badge, a wrist badge or film ring is to be issued to each individual who is expected to receive a significantly higher dose to the hands than to the whole body. Review radiation exposure records to assure that individuals concerned will not be overexposed for the current period, as a consequence of the dose calculated to be received during the operation.

c. Take steps necessary (e.g. ropes, barricades, radiation caution signs, etc.) to prevent entry of unauthorized persons within the operational zone -- area where dose rate is measured to be greater than 2 1/2 millirem/hour.

d. Prepare for contamination control, on the assumption that the source capsule may be contaminated or that a contamination-resulting accident could occur during the operation. Such precautionary procedures include use of paper coverings on surfaces of floors or tables which may be exposed to contamination during the operation; placing on paper covering all tools and items which come in direct contact with the source; having on hand such items as alpha survey instruments, air sampler, smears, gloves, etc. See Volume II.

e. Prior to the operation, check source capsule container for evidence of contamination, as specified in Section 3.5. Also, check for contamination of the internal surfaces of the empty container to which the source capsule is to be transferred.

f. Carry out dose rate measurements for both gamma and neutron radiation prior to and, as necessary, during the transfer and after the capsule has been placed in the appropriate container, as specified in Paragraph 3.4.1 above.

g. Maintain required control of exposure time of individuals by establishing and adhering to exposure time limits. Refer to readings of self reading dosimeters frequently. Avoid all unnecessary exposures.

h. Following transfer of source capsule:

(1) Read dosimeters of persons to estimate total dose (gamma and neutron) received during the operation. If indicated by a dosimeter reading or if the dosimeter is off scale, have the film badge of that person processed immediately in order to obtain an accurate determination of the total dose received.

(2) Check the emptied container for evidence of contamination. Also, as specified in Section 3.4.2 check all items and surfaces which were exposed to potential contamination during the operation.

(3) Measure dose rates resulting from the source capsule in the container, as specified in Section 3.4.1.

(4) Remove temporary barriers, signs, etc., if no longer required.

(5) Survey controlled area to assure it is clean.

3.7 Storage

a. The fuel capsule of a SNAP-27 shall be stored in its special container together with required auxiliary equipment, in accordance with the specific handling instructions accompanying the device.

b. Applicable provisions specified above in paragraphs 3.1 - 3.5 shall be complied with.

c. Permanent storage locations shall be maintained under the cognizance of the Radiological Safety Officer of the custodial activity.

d. Permanent storage locations shall be protected from entrance by unauthorized personnel by means of locks or physical barriers, security alarms and conspicuously posted with appropriate radiation caution signs.

e. Barriers surrounding permanent storage areas shall be placed in such a manner that access is restricted to all points wherein the radiation intensity is greater than 2.5 millirem/hour.

f. Normal work areas adjacent to permanent storage areas shall be below 0.1 millirem/hour.

g. No explosive or flammable materials shall be stored or used in the same or adjoining rooms with a SNAP-27 fuel capsule.

h. A permanent storage area shall have the required engineered safeguards specified in the instructions prepared for the SNAP-27. Such safeguards include those for effecting containment of airborne radioactivity in the storage area in the event of an accidental release of radioactive

material from the sealed fuel capsule and for preventing tracking of contamination. The room should be equipped with the necessary criticality monitoring equipment previously described. Storage facilities should contain appropriate shelves, cubicles, cages or other equipment necessary to assure proper spacing between units when more than one unit is stored in the same area. The storage room must not be at a positive pressure in relation to adjoining areas, and air vented from the storage room shall be preferably filtered and exhausted directly to the outside at a point well removed from actual or potential air intakes of buildings. The switch for turning off the air vent should preferably be located near the principal entrance to the storage room.

i. Comply with the preparation procedures for radiation emergencies specified in Volume II.

j. Removal of a fuel capsule from its designated storage area shall be in accordance with procedures specified in Section 4 below.

k. If the storage place of a fuel capsule is in an unrestricted area, the capsule shall be secured against unauthorized removal from the place of storage and appropriate sections from A through J above shall apply.

3.8 Decontamination

Under normal conditions of handling, storage, and transport of the SNAP-27 source capsule, there should be no need for decontamination. According to encapsulation specifications, the radioactive material is securely contained in the sealed capsule, and the external surfaces of the capsule are free of contamination as specified in 3.5. A contamination occurrence resulting from leakage or release of radioactive material

from the source capsule is considered as a radiological incident, and is covered -- along with subsequent "decontamination" -- in Volume II.

3.9 Radioactive Waste

No radioactive waste is involved under normal conditions of handling, transfer, and storage of the sealed fuel capsule of a SNAP-27. For procedures involving radioactive waste resulting from a radiological incident, see Volume II.

4. TRANSPORT--PRECAUTIONS AND REGULATIONS

4.1 Within Custodial Activity

a. Transfer of the fuel capsule of a SNAP-27 from one physical location to another within the same custodial activity shall be made with the capsule secured in its special container, together with any of its auxiliary equipment, and in accordance with special handling instructions accompanying the device. All applicable provisions of Section 3 above shall be complied with during and following such a transfer.

b. Prior to transfer of the SNAP-27 fuel capsule:

(1) Check the capsule (or container) for contamination, as specified in paragraph 3.5.

(2) Measure dose rates in order to assure doses received by persons during transfer operations do not exceed limits specified in paragraph 2.1.

c. Provide health-physics coverage during transfer operations, as necessary.

d. Measure dose rates (gamma and neutron) in environs of the source capsule in its new location, to assure compliance with requirements specified in Section 3.7; and carry out posting requirements specified in Section 3.2.

e. After arrival at its new location, check capsule (or container) for contamination, as specified in paragraph 3.5. (Optional step, dependent on circumstances involved in the transfer.)

f. Check vacated storage area for contamination and remove all radiation caution signs which are no longer applicable.

4.2 Shipment to Off-Site Activity

a. Transfer of the radioactive material capsule of a SNAP-27 shall be made:

(1) Only to an activity which is specifically authorized by AEC license or interagency agreement, and addressed to a specific individual custodian who has approved the expected date of arrival. The following information is to be sent to reach the consignee-custodian before the time of arrival of the shipment:

(a) date of shipment;

(b) expected date of arrival;

(c) method of transportation;

(d) description of material, packaging, etc.;

(e) copies of all pertinent manuals and documents, e.g., handling procedures, radiological control procedures, AEC license or interagency agreement for SNAP-27, etc.

(2) With the capsule secured in its ICC approved ground shipping container and together with its auxiliary and handling equipment, all packaged in strict accordance with written instructions provided with the SNAP-27. On the basis of a nuclear safety evaluation of SNAP-27 fuel capsules, procedures and controls to avoid accidental criticality will be developed. These procedures and controls will be contained in a separate manual which includes specific packaging instructions for shipment and will specify the maximum number of packaged SNAP-27 capsules which may be shipped in a single vehicle, airplane, or railroad car. <u>These instructions must be complied with</u>.

(3) Only by a mode of transportation specifically approved in the AEC license or interagency agreement for the SNAP-27.

(4) Only in accordance with shipping procedures which have been specifically approved by the Commission and ICC where the quantity of fuel shipped exceeds 20 curies.

b. Prior to packaging of the capsule, check it for leakage in accordance with Section 3.5 above.

c. After the capsule is packaged in its transportation container:

(1) Measure maximum dose rates (gamma and neutron) at 3 feet from package to assure ICC specified limits are not exceeded. Limits for escorted shipments are contained in Step "h" below.

(2) Check external surfaces of package for alpha contamination, by means of both an alpha survey instrument and smear wipes. Surface contamination so measured shall be non-detectable with the survey instrument and shall not exceed 1000 $\mu\mu$Ci of alpha activity per 100 square centimeters as determined by smear wipes.

The contamination limit for beta gamma activity as determined by smear wipes shall not exceed 10,000 $\mu\mu$Ci/100 cm^2.

(3) Affix on outside of package the required ICC specified label and fill in the information indicated on it, in accordance with instructions contained in paragraph 73.414 ("Radioactive Materials Labels") of 49CFR73 -- or as indicated in the SNAP-27 packaging instructions.

(4) Carry out visual inspection and testings of package (including attached auxiliary equipment) in accordance with the SNAP-27 packaging instructions.

d. Carry out any other special requirements, applicable to the specific mode of transportation to be employed. Transportation regulations include those of:

(1) Interstate Commerce Commission -- for transportation in interstate commerce by land or water. Complete regulations covering packaging, labeling and transportation of radioactive materials are published as Title 49, Code of Federal Regulations, Parts 71 to 78.

(2) Civil Aeronautics Board -- for transportation in aircraft. Applicable regulations are published in Title 14, Code of Federal Regulations, Part 49. Various individual airlines further restrict the conditions under which they will accept radioactive materials for transportation.

(3) U.S. Coast Guard -- for transportation by water. Applicable regulations appear in Title 46, Code of Federal Regulations, Part 146.

Notes: (i) Additionally, certain State regulations pertain to the transportation of radioactive material within the state -- for example, Section 175.11 (g) of the New York City Health Code, Article 175.

Limitation of Number of "Units". Since most carriers by rail express, motor truck, or air are not permitted to carry more than 40 units and since surface carriers are prohibited from storing or stowing more than 40 units in any location, consignments should not be offered for shipment that cannot be accepted by a carrier because of such quantity limitations.

(ii) There are certain licensed waste disposal vendors who are authorized to ship more than 40 units of radioactive material by special permit and by exclusive use of the vehicle.

(A "unit" is equivalent to a dose rate of one millirem/hour at one meter from the package, due to radioactive material contained in that package.)

(iii) Criticality Consideration. See Paragraph 4.2 a(2) above.

e. Provide health physics coverage during packaging operations. See section 3.6 above.

f. Prior to loading package on transporting vehicle, check vehicle for contamination, by means of both alpha survey instrument and smear wipes.

g. Provide health physics coverage during loading of the package on the transporting vehicle.

h. Measure dose rates within and outside of carrier and assure that the following dose rate limits are not exceeded:

(1) 1000 mr/hr or equivalent at 3 feet from the external surface of the package. (Closed car or vehicle only.)

(2) 200 mr/hr or equivalent at any point on the external surface of the car or vehicle. (Closed car or vehicle only.)

(3) 10 mr/hr or equivalent at six feet from the external surface of the car or vehicle; and

(4) 2 mr/hr or equivalent in any normally occupied position in the car or vehicle.

Note: These limits apply only when the shipment is transported in a car or vehicle assigned for the sole use of the consignor.

i. Apply "Dangerous - Radioactive Material" placards (or equivalent) to transporting vehicle as specified in applicable ICC regulations, or in the SNAP-27 instructions.

j. Provide transporting person(s) with appropriate types of personnel monitoring devices, as applicable. In addition, the driver (or pilot) or escort shall be issued one alpha survey instrument and one sensitive, beta gamma survey instrument in addition to the emergency supplies and equipment specified in Volume II, which have been recently serviced and calibrated so that there is reasonable assurance that they will function properly during the transport. The person to whom these instruments are issued shall be thoroughly briefed on how to use them properly.

k. Check vacated source storage area for contamination and remove all radiation caution signs which are no longer applicable.

l. Provide shipper with a written set of instructions to be followed in the event of an accident or leakage of radioactive material enroute. The driver (or pilot) of the transporting vehicle and the official escort who will accompany the shipment shall be fully briefed on these instructions and they shall be furnished with a written set of them which they shall be required to carry with them on the trip. The set of instructions shall be brief and explicit and is to include:

(1) Precautions to take for the protection of persons against radiation hazards.

(2) Actions to take to prevent spreading of contamination.

(3) Reporting requirements. See Volume II for details.

m. Records. The shipping custodial activity shall keep complete records of the shipment of a SNAP-27 fuel capsule. Such records shall cover the following items:

(1) Description of material and quantity in each container.

(2) Total quantity of special nuclear material in each shipment.

(3) Serial number of capsule.

(4) Type of ground shipping container (drawings, if available.)

(5) Serial No. and ICC permit number of shipping container.

(6) Instrumentation used and results of capsule leak test; measurement of maximum dose rates at 3 feet from ground shipping container; contamination check of ground shipping container; etc.

(7) Number of radiation units.

(8) Labels and placards affixed.

(9) Consignee and destination.

(10) Method of shipment.

(11) Class of shipment as defined in 49CFR73, paragraph (a)(4).

(12) Date of shipment - (proposed).

(13) AEC license number of consignee.

n. Receiving custodial activity. Upon arrival of the shipment at the receiving custodial activity:

(1) Provide health physics coverage for unloading operations and transfer to storage area.

(2) Hold transporting vehicle until it has been checked for contamination, by means of alpha survey instrument and smear wipes, and determined to be uncontaminated.

(3) Remove all "Dangerous Radioactive Material" placards (or equivalent) affixed to transporting vehicle.

(4) Provide health physics coverage for unpacking operations. See Section 3.6.

(5) Check source capsule for leakage, as specified in Section 3 above.

(6) Carry out other required precautionary procedures specified in Section 3 above.

o. Material transfer reports. A custodian who transfers and a custodian who receives special nuclear material in the form of a SNAP-27 fuel capsule shall promptly submit to the Commission on Form AEC-388 reports concerning each transfer of special nuclear material.

p. Material Status Reports. Each custodian shall submit to the Commission on Form AEC-578 reports concerning special nuclear materials received, transferred, or possessed by the custodian. Such reports shall be made as of December 31 of each year and shall be filed with the Commission within 30 days after the end of the period covered by the report. A report shall also be made as of June 30 unless the custodian who during the six months preceding June 30 had losses or burnups of less than 10 grams of special nuclear material and did not receive or transfer any special nuclear material.

5. RECORDS, REPORTS, AND NOTIFICATIONS

5.1 Personnel Monitoring

5.1.1 Personnel Monitoring Records. Maintain records showing the radiation exposures of all individuals for who personnel monitoring is required under Section 3.3. Such records shall be kept

on Form AEC-5, in accordance with the instructions contained in that form or on clear and legible records containing all the information required by Form AEC-5. The doses entered on the forms or records shall be for periods of time not exceeding one calendar quarter as determined by the definition in the glossary. These records shall be preserved until December 31, 1970 or until a date 5 years after termination of the individuals employment, whichever is later.

5.1.2 Notice to Employees of Exposure to Radiation. At the request of any employee, advise such employee annually of this exposure to radiation as shown in records maintained in accordance with paragraph 5.1.1.

5.1.3 Overexposures.

a. Notification Requirements. See Section 5.6 below.

b. Reporting Requirements. See Section 5.8 below.

5.1.4 Report to Former Employees of Exposure to Radiation. At the request of a former employee, furnish him a report of his exposure to radiation as shown in records maintained in accordance with paragraph 5.1.1. Such a report shall be furnished within 30 days from the time the request is made; and it shall cover each calendar quarter of the individual's employment involving exposure to radiation, or such lesser period as may be requested by the employee. The report shall also include the results of any calculations and analyses of radioactive material deposited in the body of the employee. The report shall be in writing and contain the following statement:

"This report is furnished to you under the provisions of the Atomic Energy Commission regulations entitled Standards for Protection Against Radiation (10CFR Part 20). You should preserve this report for future reference."

Note: The former employee's request should include appropriate identifying data, such as social security number and dates and locations of employment.

5.2 Surveys

Records shall be maintained showing the results of surveys and monitoring operations required by Section 3.4.

5.3 Leak-Testing of Sealed Source

Records shall be maintained to show the results of leak testings of each SNAP-27 fuel capsule, as specified in paragraph 3.5. Such records are to include the following information.

a. Complete description and identification of sealed source.

b. Leak test method used.

c. Results of leak test (microcuries of removable contamination).

d. Person who performed test.

e. Date.

5.4 Receipt, Inventory, and Transfer

Each custodial activity shall keep records showing the receipt, inventory, and transfer of SNAP-27 fuel capsules. See paragraph 4.2 (h), (o) and (p) above.

5.5 Disposal of Radioactive Waste

See Volume II.

5.6 Notifications of Incidents.

5.6.1 Immediate Notification. The designated custodian of a SNAP-27 fuel capsule shall immediately notify the Director of the appropriate Atomic Energy Commission Regional Compliance Office shown in Appendix B by telephone and telegraph of any incident involving SNAP-27 radioactive material possessed by him and which may have caused or threatens to cause:

a. Exposure of the whole body of any individual to 25 rems or more of radiation; exposure of the skin of the whole body of any individual of 150 rems or more of radiation; or exposure of the feet, ankles, hands or forearms of any individual to 375 rems or more of radiation; or

b. The release of radioactive material in concentrations which, if averaged over a period of 24 hours, would exceed 5,000 times the limits specified for such materials in Appendix A, Table II; or

c. A loss of one working week or more of the operation of any facilities affected; or

d. Damage to property in excess of $100,000.

5.6.2 Twenty-Four Hour Notification. The designated custodian of a SNAP-27 fuel capsule shall within 24 hours notify the Director of the appropriate Atomic Energy Commission Regional Compliance Office listed in Appendix B by telephone and telegraph of any incident involving SNAP-27 radioactive material possessed by him and which may have caused or threatens to cause:

a. Exposure to the whole body of any individual to 5 rems or more of radiation; exposure of the whole body of any individual to 30 rems or more of radiation; or exposure of the feet, ankles, hands, or forearms to 75 rems or more of radiation; or

b. The release of radioactive material in concentrations which, if averaged over a period of 24 hours, would exceed 500 times the limits specified for such materials in Appendix A, Table II; or

c. A loss of one day or more of the operation of any facilities affected; or

d. Damage to property in excess of $1,000.

Note: Any report filed with the AEC pursuant to paragraphs 5.6.1 and 5.6.2 above shall be prepared so that names of individuals who have received exposure to radiation will be stated in a separate part of the report.

5.7 Reports of Theft or Loss of Radioactive Material

The designated custodian shall report by telephone and telegraph to the Director of the appropriate Atomic Energy Commission Regional Compliance Office listed in Appendix B, immediately after its occurrence becomes known to the custodian, the loss or theft of a SNAP-27 fuel capsule. See Volume II.

5.8 Reports of Overexposures and Excessive Levels and Concentrations

5.8.1 Atomic Energy Commission. In addition to any notification required by Section 5.6, the designated custodian of the SNAP-27 fuel capsule concerned shall make a report in writing within 30 days to the Director, Division of Licensing and Regulation, U.S. Atomic Energy Commission, Washington, D.C., with a copy to the Director of the appropriate Atomic Energy Commission Regional Compliance Office listed in Appendix B of:

a. Each exposure of an individual to radiation or concentrations of radioactive material in excess of any applicable limit in this volume I or in the applicable AEC license or interagency agreement.

Each report required under this paragraph shall describe the extent of exposure of persons to radiation or to radioactive material; levels of radiation and concentrations of radioactive material; the cause of the exposure, levels, or concentrations; and corrective steps taken or planned to assure against a recurrence.

Note: Any report filed with the AEC pursuant to this section shall be prepared so that names of individuals who have received exposure to radiation will be stated in a separate part of the report.

5.8.2 Individual. In any case where a custodian of a SNAP-27 fuel capsule is required pursuant to the provisions of this section to report to the AEC any exposure of an individual to radiation or to concentrations of radioactive material, said custodian shall also notify such individual of the nature and extent of exposure. Such notice shall be in writing and shall contain the following statement:

> "This report is furnished to you under the provisions of the Atomic Energy Commission regulations entitled Standards for Protection Against Radiation (10CFR Part 20). You should preserve this report for future reference."

5.9 Report of Shipping Container Failure

The custodian shall report to the Division of Materials and Licensing within 30 days, each case of failure of containers used to ship SNAP-27 fuel capsules, regardless of the cause.

REFERENCES

1. Atomic Energy Commission Regulations -- Title 10, Code of Federal Regulations:

   (a) Part 20 (10CFR20), Standards for Protection Against Radiation.

   (b) Part 30 (10CFR30), Licensing of By-Product Material.

   (c) Part 70 (10CFR70), Special Nuclear Material.

   (d) Part 71 (10CFR71), Packaging of Radioactive Material for Transport.

2. Interstate Commerce Commission (ICC) Regulations -- Title 49, Code of Federal Regulations:

   (a) Part 71 (49CFR71), General Information.

   (b) Part 72 (49CFR72), Commodity Lists.

   (c) Part 73 (49CFR73), Regulations Applying to Shippers.

   (d) Part 74 (49CFR74), Regulations Applying to Carriers by Rail Freight.

   (e) Part 75 (49CFR75), Regulations Applying to Carriers by Rail Express.

   (f) Part 76 (49CFR76), Regulations Applying to Rail Carrier in Baggage Service (LCL Movements).

   (g) Part 77 (49CFR77), Regulations Applying to Shipments Made by Way of Common, Contract, or Private Carriers by Public Highway (Motor Carriers).

(h) Part 78 (49CFR78), Shipping Container Specifications.

3. Civil Aeronautics Board Regulations -- Title 14, Code of Federal Regulations, Part 49, "Transportation of Explosives and Other Dangerous Articles."

4. Coast Guard Regulations -- Title 46, Code of Federal Regulations, Part 46, Regulations of the U.S. Coast Guard Covering the Transportation or Storage of Explosives or Other Dangerous Articles or Substances and Combustible Liquids on Board Vessels.

5. Handbook of Federal Regulations Applying to Transportation of Radioactive Materials. United States Atomic Energy Commission; Washington, D.C., 1965.

GLOSSARY

1. AEC Interagency Agreement means a formal agreement between the Atomic Energy Commission and another federal agency, in lieu of an AEC license.

2. AEC License means a license issued by the Atomic Energy Commission under the regulations in Title 10 Code of Federal Regulations, Part 30, 40, or 70.

3. Airborne Radioactivity means any radioactive material dispersed in the air in the form of dusts, fumes, mists, vapors, or gases.

4. Airborne Radioactivity Area. See Paragraph 3.2.6.

5. Calendar quarter means any period determined according to either of the following subdivisions:

   (a) The first period of any year may begin on any date in January; provided that the second, third, and fourth periods accordingly begin on the same date in April, July, and October, respectively, and that the fourth period extend into January of the succeeding year, if necessary to complete a three-month quarter. During the first year of use of this method of determination, the first period for that year shall also include any additional days in January preceding the starting date for the first period.

   (b) The first period in a calendar year of 13 complete, consecutive calendar weeks; the second period in a calendar year of 13 complete,

consecutive calendar weeks, the third period in a calendar year of 13 complete, consecutive calendar weeks; the fourth period in a calendar year of 13 complete, consecutive calendar weeks.

(c) Alternatively, the four periods may consist of the first 14 complete, consecutive calendar weeks; the next 12 complete consecutive calendar weeks; the next 14 complete, consecutive weeks; and the last 12 complete, consecutive calendar weeks. If at the end of a calendar year there are any days not falling within a complete calendar week of that year, such days shall be included (for radiological control purposes) within the last complete calendar week of that year. If at the beginning of any calendar year there are days not falling within a complete calendar week of that year, such days shall be included (for radiological control purposes) within the last complete calendar week of the previous year.

(d) The method observed by an activity to determine calendar quarters for radiological control purposes shall not be changed, except at the beginning of a calendar year.

6. Criticality means the state in which the effective neutron multiplication constant of a quantity of special nuclear material equals or exceeds unity, so that a nuclear chain reaction occurs.

7. Dose Units

a. Roentgen. Unit of exposure of x- or gamma radiation. One roentgen is an exposure of x- radiation or gamma radiation such that the associated corpuscular emission per 0.001293 gm of air

produces, in air, ions carrying 1 esu of quantity of electricity of either sign. (One milliroentgen (mr) = 0.001 roentgen) For determining exposures to x- or gamma rays up to 3 mev, the dose limits may be assumed to be equivalent to the "air dose". For the purpose of this manual, "air dose" means that the dose is measured by a properly calibrated appropriate type instrument in air at or near the body surface in the region of highest dosage rate.

(b) The rad, as used in this manual, is a measure of the dose of any ionizing radiation to body tissues in terms of the energy absorbed. One rad is the dose corresponding to the absorption of 100 ergs per gram (one millirad (mrad) = 0.001 rad).

(c) The rem, as used in this manual, is a measure of the dose of any ionizing radiation to body tissue in terms of its estimated biological effect relative to a dose of one roentgen(r) of x-rays. (One millirem (mrem) = 0.001 rem.) The relation of the rem to other dose units depends upon the biological effect under consideration and upon the conditions of irradiation.

(d) See item 8 below.

8. Equivalent Dose. For radiological control purposes, any of the following is considered to be equivalent to a dose of one rem:

(a) A dose of 1 roentgen (r) due to x- or gamma radiation.

(b) A dose of 1 rad due to x-, gamma, or beta radiation.

(c) A dose of 0.1 rad due to neutrons or high energy protons.

(d) A dose of 0.05 rad due to particles heavier than protons and with sufficient energy to reach the lens of the eye.

Note: If it is more convenient to measure the neutron flux, or equivalent, than to determine the neutron dose in rads, one rem of neutron radiation may, for purposes of applicable regulations, be assumed to be equivalent to 14 million neutrons per square centimeter incident upon the body; or, if there exists sufficient information to estimate with reasonable accuracy the approximate distribution in energy of the neutrons per square centimeter equivalent to one rem may be estimated from the following table:

NEUTRON FLUX DOSE EQUIVALENTS

Neutron Energy (Mev)	Number of neutrons per square centimeter equivalent to a dose of 1 rem. (neutrons/cm^2)	Average flux to deliver 100 millirem in 40 hours. (neutrons/cm^2 per sec.)
Thermal	970×10^6	670
0.0001	720×10^6	500
0.005	820×10^6	570
0.02	400×10^6	280
0.01	120×10^6	80
0.5	43×10^6	30
1.0	26×10^6	18
2.5	29×10^6	20
5.0	26×10^6	18
7.5	24×10^6	17
10	24×10^6	17
10 to 30	14×10^6	10

9. Individual means any human being.

10. Nuclear Safety means the avoidance of accidental criticality.

11. Occupational dose includes exposure of an individual to radiation:

(a) In a restricted area; or

(b) in the course of employment in which the individual's duties involve exposure to radiation; provided, that "occupational dose" shall not be deemed to include any exposure of an individual to radiation for the purpose of medical diagnosis or medical therapy of such individual.

12. Personal monitoring equipment means devices designed to be worn or carried by an individual for the purpose of measuring the dose received (e.g., film badges, pocket chambers, pocket dosimeters, film rings, etc.).

13. Radioactivity Units. Radioactivity is commonly, and for purposes of this manual, shall be measured in terms of disintegrations per unit time or in curies. One curie (c) = 3.7×10^{10} disintegrations per second (dps) = 2.2×10^{12} disintegrations per minute (dpm). A commonly used submultiple of the curie is the microcurie (μCi) One μCi = 0.000001 c = 3.7×10^{4} dps = 2.2×10^{6} dpm.

14. Sealed source. Radioactive material that is encased in, and is to be used in, a container in a manner intended to prevent leakage of the radioactive material.

15. Special nuclear material means:

(a) plutonium, uranium-233, uranium enriched in the isotope 233 or in the isotope 235, and any other material which the Atomic Energy

Commission, pursuant to the provisions of section 51 of the Atomic Energy Act of 1954, determines to be special nuclear material, but does not include source material; or

(b) any material artificially enriched by any of the foregoing but does not include source material.

16. Survey means an evaluation of the radiation hazards incident to the production, use, release, disposal, or presence of radioactive materials or other sources of radiation under a specific set of conditions. When appropriate, such evaluation includes a physical survey of the location of materials and equipment, and measurements of levels of radiation or concentrations of radioactive materials present.

APPENDIX A

CONCENTRATIONS IN AIR AND WATER ABOVE NATURAL BACKGROUND*

Element (Atomic No.)	Isotope**	Table I Column 1 Air (μCi/cc)	Table I Column 2 Water (μCi/cc)	Table II Column 1 Air (μCi/cc)	Table II Column 2 Water (μCi/cc)
Plutonium (94)	Pu-238 S	2×10^{-12}	1×10^{-4}	7×10^{-14}	5×10^{-6}
	I	3×10^{-11}	8×10^{-4}	1×10^{-12}	3×10^{-5}
	Pu-239 S	2×10^{-12}	1×10^{-4}	6×10^{-14}	5×10^{-6}
	I	4×10^{-11}	8×10^{-4}	1×10^{-12}	3×10^{-5}
	Pu-240 S	2×10^{-12}	1×10^{-4}	6×10^{-14}	5×10^{-6}
	I	4×10^{-11}	8×10^{-4}	1×10^{-12}	3×10^{-5}
	Pu-241 S	9×10^{-11}	7×10^{-3}	3×10^{-12}	2×10^{-4}
	I	4×10^{-8}	4×10^{-2}	1×10^{-9}	1×10^{-3}
	Pu-242 S	2×10^{-12}	1×10^{-4}	6×10^{-14}	5×10^{-6}
	I	4×10^{-11}	9×10^{-4}	1×10^{-12}	3×10^{-5}
	Pu-243 S	2×10^{-6}	1×10^{-2}	6×10^{-8}	3×10^{-4}
	I	2×10^{-6}	1×10^{-2}	8×10^{-8}	3×10^{-4}
	Pu-244 S	2×10^{-12}	1×10^{-4}	6×10^{-14}	4×10^{-6}
	I	3×10^{-11}	3×10^{-4}	1×10^{-12}	1×10^{-5}
And single radionuclide not listed in 10CFR20, Appendix B, Tables I and II, which decays by alpha emission or spontaneous fission		6×10^{-13}	4×10^{-7}	2×10^{-14}	3×10^{-8}

* From Appendix B of 10CFR20.
** Soluble (S); Insoluble (I).

NOTE: A complete list of nuclides appears in Appendix B of 10CFR20.

APPENDIX B

UNITED STATES ATOMIC ENERGY COMMISSION
COMPLIANCE OFFICES*

Region		Address	Telephone
I	Connecticut, Delaware, District of Columbia, Maine, Maryland, Massachusetts, New Hampshire, New Jersey, New York, Pennsylvania, Rhode Island, and Vermont	Region I Division of Compliance USAEC 376 Hudson Street New York, N.Y. 10014	(212) 989-1000 Ext. 281
II	Alabama, Arkansas, Florida, Georgia, Kentucky, Louisiana, Mississippi, North Carolina, Panama Canal Zone, Puerto Rico, South Carolina, Tennessee, Virginia, Virgin Islands, and West Virginia	Region II Division of Compliance USAEC 50 Seventh Street, N.E. Atlanta, Georgia 30323	(404) 526-5791
III	Illinois, Indiana, Iowa, Michigan, Minnesota, Missouri, Ohio, and Wisconsin	Region III Division of Compliance USAEC Suite 410 Oakbrook Professional Building Oakbrook, Illinois	(312) 654-1680 (nights and holidays: 257-7711 Ext. 541)
IV	Colorado, Idaho, Kansas, Montana, Nebraska, New Mexico, North Dakota, Oklahoma, South Dakota, Texas, Utah, and Wyoming	Region IV Division of Compliance USAEC 10395 West Colfax Ave. Denver, Colorado 80215	(303) 297-4211 (nights and holidays: 237-5095)
V	Alaska, Arizona, California, Hawaii, Nevada, Oregon, Washington and U.S. Territories and Possessions in the Pacific	Region V Division of Compliance USAEC 2111 Bancroft Way Berkeley, California	(415) 841-5620

* Appendix D of 10CFR20.