GE-NS-0080-04-18

1975

NS 0080-04-18
JANUARY 24, 1967

CID #1317
CALL #05-04

TEST PLAN
FOR
SNAP-27 ENGINEERING MODEL NO. 8
SIMULATED MISSION TESTS

Aerospace Nuclear Safety
Information Center
Accession No. FEB 28 1967
01706-1
Sandia Corporation

DO NOT DESTROY
Return to
Aerospace Nuclear Safety
Information Center

ADVANCED NUCLEAR SYSTEMS OPERATION
GENERAL ELECTRIC
MISSILE AND SPACE DIVISION
Valley Forge Space Technology Center
P.O. Box 8555 • Philadelphia 1, Penna.

GE-NS-0080-04-18

1975

NS 0080-04-18
JANUARY 24, 1967

CID #1317
CALL #05-04

TEST PLAN
FOR
SNAP-27 ENGINEERING MODEL NO. 8
SIMULATED MISSION TESTS

Aerospace Nuclear Safety
Information Center
Accession No. FEB 28 1967
01706-1
Sandia Corporation

DO NOT DESTROY
Return to
Aerospace Nuclear Safety
Information Center

ADVANCED NUCLEAR SYSTEMS OPERATION
GENERAL ELECTRIC
MISSILE AND SPACE DIVISION
Valley Forge Space Technology Center
P.O. Box 8555 • Philadelphia 1, Penna.

TABLE OF CONTENTS

Section		Page
1	INTRODUCTION	1-1
	1.1 Scope	1-1
	1.2 Objectives	1-1
	1.3 Applicable Drawings and Specifications	1-1
	1.4 Test Specimen	1-2
	1.5 Abbreviations	1-8
2	SUMMARY OF TEST	2-1
	2.1 Test Flow Chart, Testing Sequence, and Elapsed Test Times	2-1
	2.2 Health and Safety Hazards	2-1
	2.3 Security	2-7
	2.4 Responsibilities	2-7
	2.5 Organization Responsibility	2-9/2-10
3	TEST CONDITIONS, FACILITIES AND EQUIPMENT	3-1
	3.1 Test Conditions	3-1
	3.2 Test Facilities	3-2
	3.3 Test Equipment	3-2
4	PRE-TEST REQUIREMENTS AND OPERATIONS	4-1
	4.1 Leak Tests	4-1
	4.2 Fixture Vibration Tests	4-1
	4.3 Instrumentation System	4-2
	4.4 Pre-Acceptance Buy-Off	4-22
5	TEST OPERATIONS	5-1
	5.1 Visual Examination of the GA as Received Condition from 3M	5-1
	5.2 Resistance and Continuity Test	5-1
	5.3 I-V Mapping in Air	5-2
	5.4 Leak Rate Test in Vacuum (GA Non-Operating)	5-4
	5.5 GA Cable Assembly and T/C Installation	5-11
	5.6 Resistance and Continuity Test	5-11
	5.7 Operability Assurance (OA) Vibration Test (Acceptance Level)	5-11
	5.8 I-V Mapping in Air	5-13
	5.9 I-V Mapping (Vacuum 170° Sink) and Leak Rate Test	5-13
	5.10 Thermal-Vacuum Test	5-16
	5.11 I-V Mapping (Vacuum 170° Sink) and Leak Rate Test	5-16
	5.12 Thermal-Vacuum Test	5-16
	5.13 I-V Mapping (Vacuum 170° Sink) and Leak Rate Test	5-17
	5.14 I-V Mapping (Vacuum 170° Sink) with Fueled Capsule	5-17
	5.15 High Temperature Test	5-17
	5.16 I-V Mapping (Vacuum 170° Sink) and Leak Rate Test	5-17

TABLE OF CONTENTS (Cont)

Section		Page
	5.17 Low Temperature Test	5-18
	5.18 I-V Mapping (Vacuum 170° Sink) and Leak Rate Test	5-18
	5.19 Sinusoidal Vibration Test (Qualification Level)	5-18
	5.20 Random Vibration Test (Qualification Level)	5-19
	5.21 I-V Mapping (Vacuum 170° Sink) and Leak Rate Test	5-20
	5.22 Acceleration Test	5-20
	5.23 I-V Mapping (Vacuum 170° Sink) and Leak Rate Test	5-20
	5.24 Acoustic Noise Test	5-20
	5.25 I-V Mapping (Vacuum 170° Sink) and Leak Rate Test	5-21
	5.26 Thermal-Vacuum Operating Life Test	5-22
	5.27 Coating Samples and Test	5-22
6	POST-TEST OPERATIONS	6-1/6-2
APPENDICES		
A	OPERATING INSTRUCTIONS FOR THE GROUND SUPPORT EQUIPMENT	A-1
B	ENGINEERING DRAWINGS	B-1
C	NUCLEAR SAFETY PRECAUTIONS	C-1/C-2

LIST OF ILLUSTRATIONS

Figure	Title	Page
1-1	Typical Generator Assembly	1-4
1-2	Typical Mechanical Thermopile Assembly	1-5
1-3	Electric Fuel Capsule Simulator (EFCS)	1-6
1-4	Heat Sink (Cold Frame, Outer Case, and Fins)	1-7
1-5	Handling Base Plate	1-9
2-1	GA Model No. 8 Test Flow Chart	2-2
2-2	Total Elapsed Test Time (297 Days)	2-6
3-1	Floor Plan of Test Facility	3-3
3-2	Vacuum Chamber (Space Simulator)	3-4
3-3	Thermal-Vacuum Support Fixture	3-6
3-4	Engineering Test Monitor Console	3-11
3-5	Readout Console	3-15
3-6	IPU Simulator Console	3-18
3-7	3M Supplied Equipment	3-20
4-1	Vacuum Chamber Cylinder Thermocouple Locations on Thermal Shroud	4-3
4-2	Dolly Door Thermal Shroud Thermocouple Locations	4-4
4-3	End-Plates Thermocouple Locations	4-5
4-4	Support Fixture Thermocouple Locations	4-6
4-5	Generator Assembly Aft Seal Thermocouple Locations	4-17
4-6	Electric Fuel Capsule Simulator (EFCS) Thermocouple Locations	4-18
5-1	Typical I-V Mapping	5-5
5-2	Sample Generator I-V Mapping Summary Sheet	5-6
5-3	Sample Acceptance Data Sheet	5-7/5-8
5-4	Definition of the Three Major Orthogonal Axes to be Used in Testing the GA	5-12
5-5	Orientation of GA in Space Simulator	5-14

LIST OF TABLES

Table	Title	Page
2-1	Test Sequence for Engineering Model No. 8	2-3
2-2	Responsibilities	2-9/2-10
4-1	Generator Assembly Thermocouple Locations	4-7

TEST PLAN FOR SIMULATED MISSION
ENGINEERING MODEL NO. 8

SECTION 1.0
INTRODUCTION

1.1 SCOPE

This document presents detailed instructions for performing engineering tests for a simulated mission on the SNAP-27 Radioisotope Thermoelectric Generator Assembly Model No. 8. The tests are scheduled to start during the week of January 30, 1967.

1.2 OBJECTIVES

The primary objective of this test program is to evaluate the generator's performance under simulated mission conditions.

1.3 APPLICABLE DRAWINGS AND SPECIFICATIONS

1.3.1 DRAWINGS

All applicable drawings are contained in Appendix B, other than those that are classified.

47R300128G4	Generator Assy. Mod 8 (Classified)
47E300323G1	Engineering Test Monitor Console
47E300104G4	Outer Shell Assy.
47E300325G1	Readout Console
47C300169G1	Hot Frame Assy.
47E300327G1	IPU Simulator Console
47E300097P1	Cold Frame (Classified)
47R300195	Generator Instr. Thermopile Installation
47D300225G2	Aft Hermetic Seal Assy.
47R300334	R. T. D. and Thermocouple Installation
47R300126G1	Generator Power Wiring Arrangement (Classified)
47C300443	Cable Assembly
47R300403	Wiring Diagram Thermopile with Thermocouple Locations

47R300454	Cabling Hookup Mod. 5, 6, and 8
47D300100P1	Fwd. Hermetic Seal Assy.
47D300331	Type "A" Electric Fuel Capsule Simulator
47D300415	Handling Base Plate (Classified)
47D300332	Type "B" Electric Fuel Capsule Simulator
47D210654	Vibration Table Mounting Fixture
47D300400	Fuel Capsule Assembly (Classified)

1.3.2 SPECIFICATIONS

1) "Environmental and Test Requirements for the Integrated Power Unit System, SNAP-27 Program", No. NS 0020-05-01-A.

2) Performance and Design Requirements for the Generator Assembly, SNAP-27 Program", No. NS 6115-30-01-A.

3) "Long Life Test Laboratory Specification", No. 43E3-001.

4) "Measurements and Environments Engineering Test Equipment Instruction Manual, 8' x 10' Space Simulator Test Facility" prepared by J. H. Jones, dated November 20, 1961.

5) "Performance and Design Reqts for the IPU Test Panel - SNAP-27 Program", No. ERNS 4935-01-15.

6) "Generator Functional Performance Acceptance Test Plan" Report No. 3M, dated August 12, 1966.

1.4 TEST SPECIMEN

1.4.1 GENERATOR SPECIMEN

The Model No. 8 engineering thermoelectric generator assembly (GA) for the SNAP-27 Program is the primary test specimen for this test plan. The materials and processes used in the engineering model are exactly the same as those to be used for the SNAP-27 qualification and flight generators. The engineering model will be manufactured and assembled by Solar and the 3M Company and will be tested by the Advanced Nuclear Systems Engineering group of the General Electric Company, Missile and Space Division (GE-MSD) located at Valley Forge, Pennsylvania.

The GA is 18 inches high, 17 inches in diameter, and weighs about 26 pounds. The GA consists primarily of the hot frame, the thermoelectric couples, a heat sink, and internal insulation. The GA is shown in Figure 1-1; the thermopile assembly with its thermoelectric couples is shown in Figure 1-2. The GA, when combined with the heat source (fuel capsule), is defined as an integrated power unit (IPU).

The fuel capsule (FCA) consisting of a nuclear heat source properly encapsulated, and an end plate assembly for fastening it into the GA, provides the necessary heat to produce electrical power.

The heat source to be used for the GA Test Program is an electric fuel capsule simulator (EFCS), as shown in Figure 1-3. Two types of EFCS's will be utilized. A type "B" long life EFCS, capable of operating in a vacuum equal to or less than 10^{-5} Torr for at least 8,600 hours, will be used for all vacuum testing. A type "A" dynamic short life EFCS will be used for ambient operation. The power input is adjustable to provide specified operating temperatures at the thermopile hot junction. They are equipped with ten thermocouples for recording temperatures during testing.

The thermoelectric couple assembly provides direct energy conversion within the GA. The couples, each consisting of an N-leg and a P-leg, are sandwiched between the hot and cold frames.

Heat is first transferred from the heat source (EFCS) to the hot frame, then from the hot frame to the hot shoes and elements, and finally to a heat sink.

The heat sink consists of a cold frame, outer case, and eight fins, as shown in Figure 1-4. Heat from the cold junction of the thermoelectric couple is transferred first to the cold frame and then to the outer case and fins. Heat from the outer case and fins is dissipated to the surroundings by thermal radiation.

Thermal insulation, Min-K-1301, is packed into the voids between the internal components of the GA. The GA is then back-filled with Argon Gas to a pressure of 25 psia when at operating temperatures of 1100°F at the hot junction and 525°F at the cold junction. A

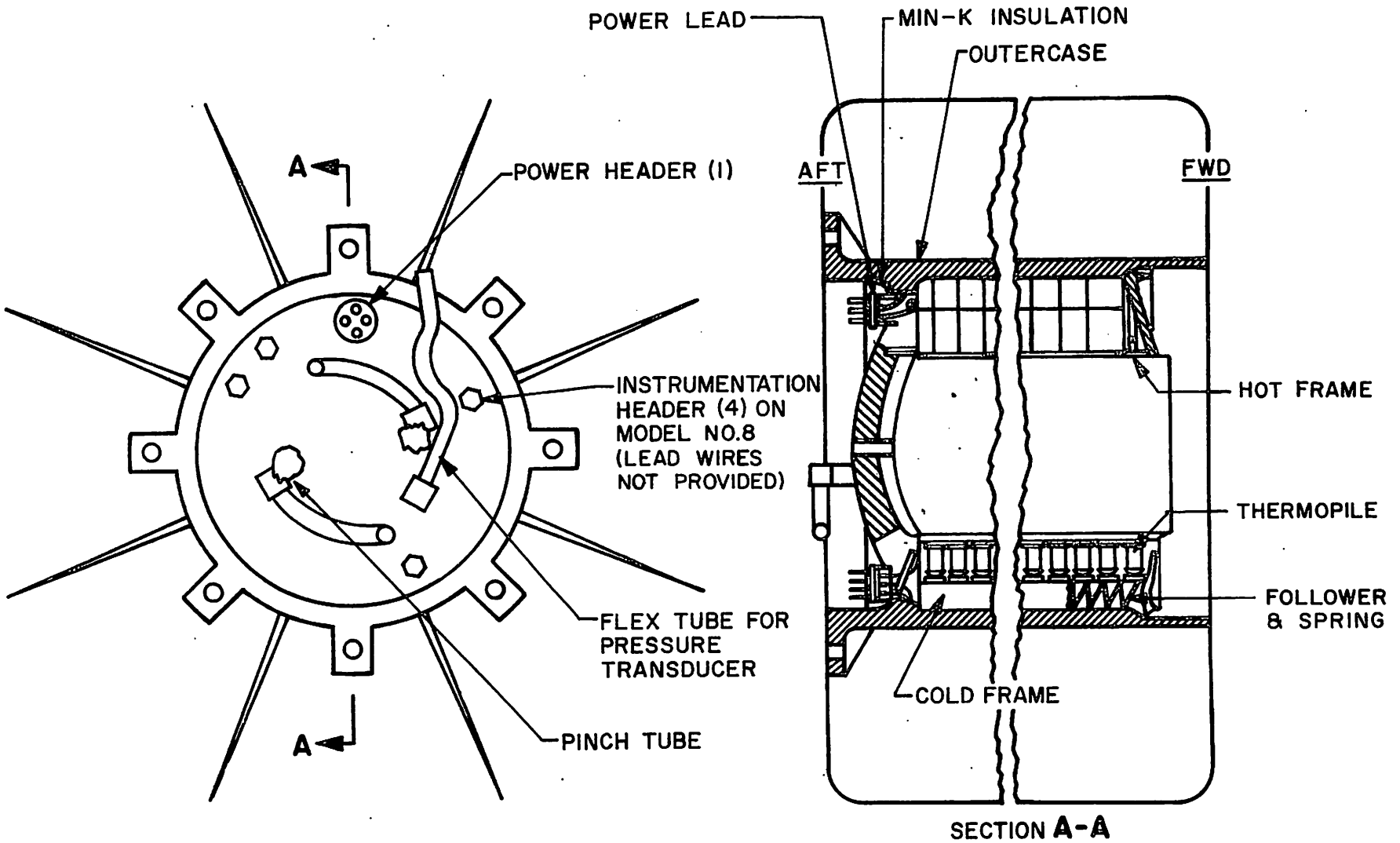

Figure 1-1. Typical Generator Assembly

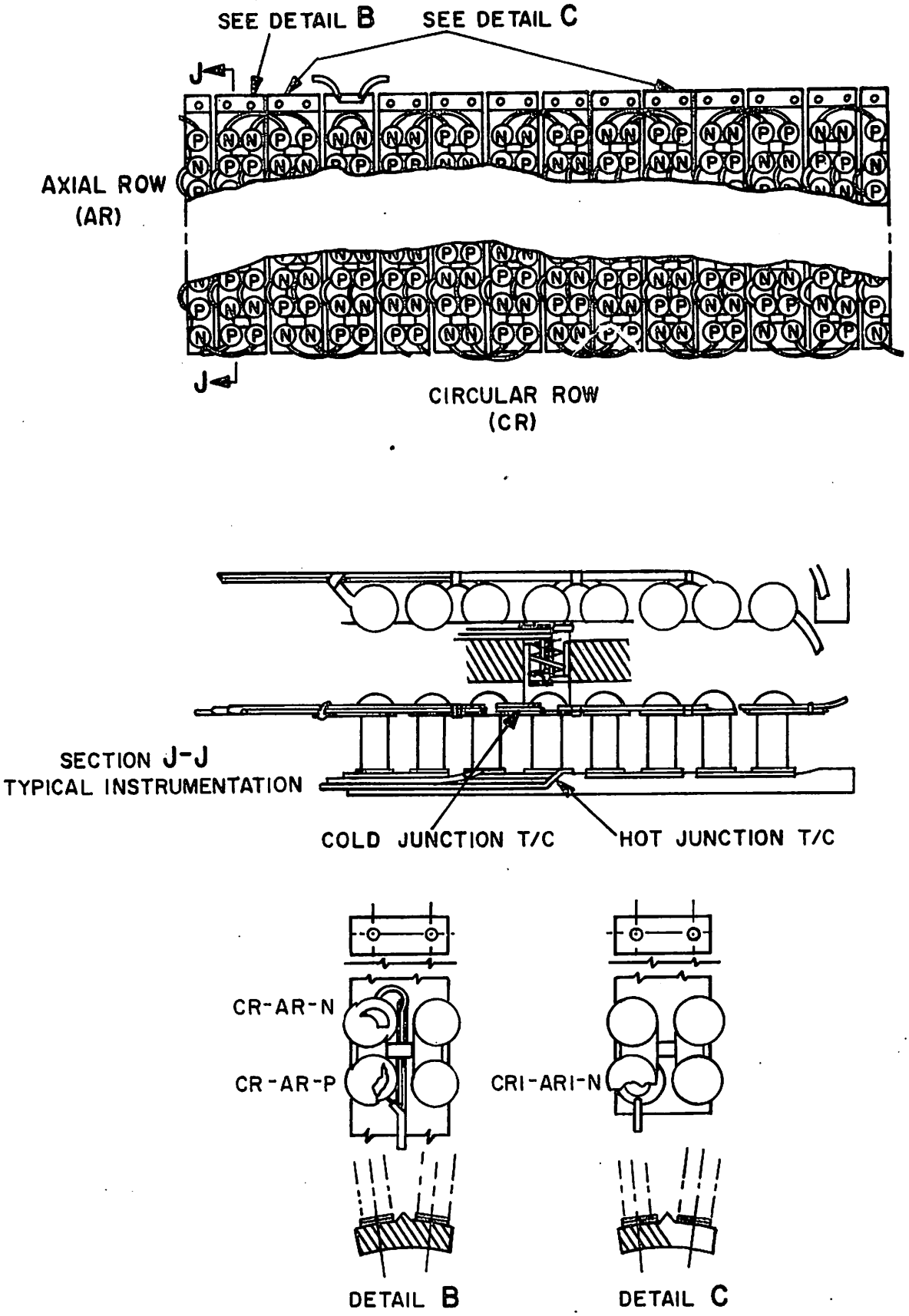

Figure 1-2. Typical Mechanical Thermopile Assembly

TABLE 2-1. TEST SEQUENCE FOR ENG. MODEL NO. 8 (SHEET 2 OF 3)

REQUIRED TESTS	SPECIFICATION NO.	REF. NO.	COMMENTS
THERMAL VACUUM TEST (350 HRS)	NS-0020-05-01-A	4.9.14.3	Change from - 280°F to + 170°F Temperatures Every 48 Hours.
I-V MAPPING (VACUUM 170° SINK) AND LEAK RATE TEST	NS-0020-05-01-A	4.9.2	
THERMAL VACUUM TEST (350 HRS)	NS-0020-05-01-A	4.9.14.3	
I-V MAPPING (VACUUM 170° SINK) AND LEAK RATE TEST	NS-0020-05-01-A	4.9.2	
I-V MAPPING (VACUUM 170° SINK)			Use Fueled Capsule for This Mapping
HIGH TEMPERATURE START UP TEST	NS-0020-05-01-A	4.9.12	The GA Will Be Started Up While at Lunar Day Environment
I-V MAPPING (VACUUM 170° SINK) AND LEAK RATE TEST	NS-0020-05-01-A	4.9.2	
LOW TEMPERATURE START UP TEST	NS-0020-05-01-A	4.9.13	The GA Will Be Started Up While at Lunar Night Environment
I-V MAPPING (VACUUM 170° SINK) AND LEAK RATE TEST	NS-0020-05-01-A	4.9.2	

TABLE 2-1. TEST SEQUENCE FOR ENG. MODEL NO. 8 (SHEET 3 OF 3)

REQUIRED TESTS	SPECIFICATION NO.	REF. NO.	COMMENTS
SINUSOIDAL VIBRATION TEST (QUAL LEVEL)	NS-0020-05-01-A	4.9.11.2.b	Procedure II, Using the C-125 Exciter
RANDOM VIBRATION TEST (QUAL LEVEL)	NS-0020-05-01-A	4.9.11.2.a	Procedure I, Using the C-125 Exciter
I-V MAPPING (VACUUM 170° SINK) AND LEAK RATE TEST	NS-0020-05-01-A	4.9.2	
ACCELERATION TEST	NS-0020-05-01-A	4.9.10	
I-V MAPPING (VACUUM 170° SINK) AND LEAK RATE TEST	NS-0020-05-01-A	4.9.2	
ACOUSTIC NOISE TEST			To Be Performed at RSD
I-V MAPPING (VACUUM 170° SINK) AND LEAK RATE TEST	NS-0020-05-01-A	4.9.2	
THERMAL VACUUM LIFE TEST (4400 HOURS)			Perform Leak Rate I-V Mapping at 1000, 3000, and 4400 Hours.
COATING EXAMINATION AND TEST			

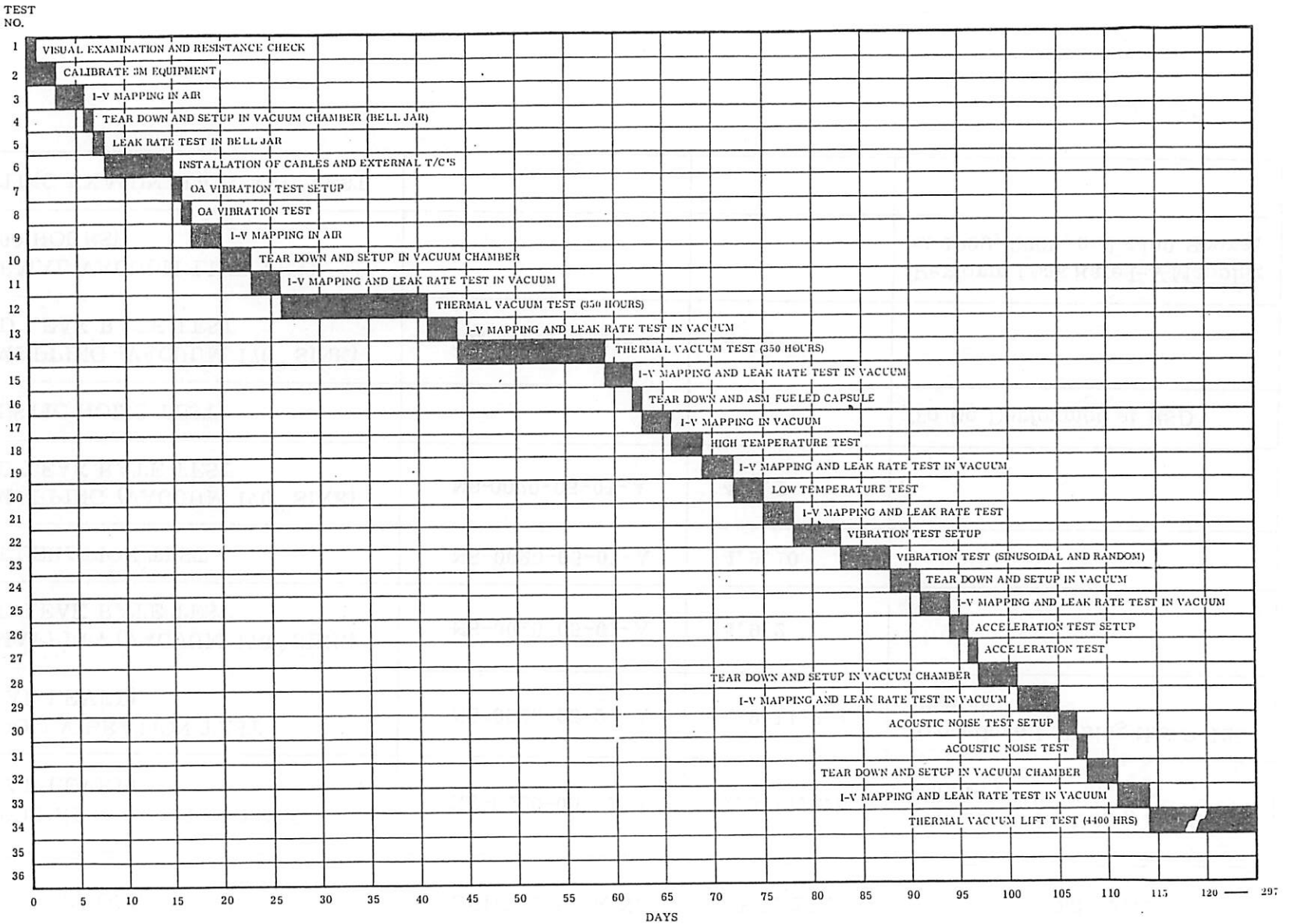

Figure 2-2. Total Elapsed Test Time (297 Days)

2) Insure there is cooling water flowing through the system before start up. Check the small needle valves on the discharge line from the vapor pumps.

3) Never turn off the mechanical pump or break vacuum in the chamber until after the diffusion pumps are cool.

4) Always break vacuum in the chamber by using the vacuum break valve on the chamber.

5) Never keep the ion gage on or attempt to outgas it when the pressure in the chamber is higher than 9×10^{-4} Torr.

6) Never keep the system open to the atmosphere for any length of time.

7) Never allow the discharged cooling water temperature from the diffusion to rise above 120°F. The discharged water should be kept around body temperature. Any temperature less than this will waste power and decrease effective pumping speed.

8) Never allow the chamber ? down to atmosphere until the trap is at ambient temperature. to do what down to atmospheric pressure?

2.3 SECURITY

The classification of the test specimens, test parameters, and test data shall be "Unclassified".

2.4 RESPONSIBILITIES - (See Table 2-2.)

2.4.1 TEST CONDUCTOR

1) Direct and integrate the efforts of design, quality control, manufacturing and support operations

2) Expedite test program consistent with funding limitations and schedules

3) Inform Program Office and Systems Engineering of test status and/or directed changes in the test program

4) Coordinate preparation of the final test report

5) Maintain a daily log of all test activities, problem developments and tests conducted

6) Maintain surveillance of tests being conducted to ensure performance is in accordance with test objectives

7) Test conductor shall be the single point contact for all participation during the test

2.4.2 SYSTEM REQUIREMENTS ENGINEER

1) Prepare the test plan in accordance with objectives delineated by the requirements specification

2) Provide test conductor with test requirements

3) Provide test conductor with latest changes in system requirements

4) Determine strain gage instrumentation and recording requirements to satisfy test objectives

5) Coordinate all changes in GA design, test conditions and schedules to satisfy test objectives

2.4.3 QUALITY CONTROL (QC) DESIGN ENGINEER

1) Design and provide test fixtures

2) Design and provide test equipment and instrumentation

2.4.4 QC TEST ENGINEER

1) Set up test equipment, fixtures and instrumentation

2) Prepare detailed procedures required for test equipment installation and operation

3) Responsible for test operations under supervision of test conductor

2.4.5 THERMAL ANALYST

1) Determine temperature instrumentation and recording requirements to satisfy test objectives

2) Determine and define all thermal boundary conditions to allow construction of the thermal vacuum test facility

3) Prepare and issue the thermal analysis, conclusions and recommendations section of the Test Report in accordance with "Test Report Requirements Specification ANSE 270-501", dated May 17, 1965

ORGANIZATION RESPONSIBILITY

TABLE 2-2. RESPONSIBILITIES

RESPONSIBLE INDIVIDUAL	*ANSO ENERGY CONVERSION SYSTEMS DEVELOPMENT	ANSO SYSTEMS ENGINEERING	ANSO SYSTEMS ANALYSIS	SPACECRAFT PRODUCT ASSURANCE
TEST CONDUCTOR	X			
THERMAL ANALYST			X	
SYSTEM REQUIREMENTS ENGINEER		X		
QC DESIGN ENGINEER				X
QC TEST ENGINEER				X

*Advanced Nuclear Systems Operation

e. Readout Sequence - A scan may be started on any desired channel and stopped on pre-selected block of ten channels. The system can also continually read on any cted point. Readout may be done visually on the digital voltmeter or as punch card/ ter readouts.

f. Response - The amplifier unit of the scanner will respond to 0.01% of its full scale e in 20 microseconds at 10 kc bandwidth. The digital voltmeter unit of the scanner will ›ond to 0.01% of its full scale value within 20 microseconds, and is capable of converting in a maximum time of 670 microseconds.

g. Accuracy - The system accuracy (omitting sensor error) is rated at ±0.03% of full e or ±4.0 microvolts, whichever is greater. Based upon the 10 millivolt setting and ›er-constantan thermocouples, an error not greater than ±0.25°F will be introduced he Data Management System.

h. Noise - This depends upon the circuits connected to the scanner input. A shorted t will be in the order of ±0.10% of full scale or ±2.0 microvolts whichever is greater.

i. Back-Up Scanner Readout - In addition to the normal reduced data readout mode ıg punch cards, direct voltage readout by the "ATLAM" scanner may be obtained visually n the digital voltmeter, by decimal values printed on paper tape or by coded output on ched paper tape.

j. Mobility - The complete system is composed of a group of mobile consoles and is lily moved for use where required. Approximately two days should be allowed for just ›onnecting, reconnecting and checkout of the system.

k. Open Channel Rejection - Thermocouples which indicate an open circuit to the nner can be automatically rejected from any averages in which they are included.

l. Optimum Scanning Rates - The electronics of the scanner are capable of a one kc ›. The cross bar now incorporated will switch at a rate of 100 times per second. The mal maximum scan rate for signal levels of 0-10 millivolts and 10-100 millivolts are 0 points per second and 20 points per second respectively.

3.3.3 HELIUM LEAK DETECTOR

A Veeco MS-9 series (or equivalent) helium mass spectrometer shall be used in combination with the vacuum system for the leak rate test. The system shall be calibrated to measure helium leak rates ranging from 1×10^{-5} std cc/sec. to 1×10^{-10} std cc/sec.

3.3.4 MODEL C-125 VIBRATION EXCITER

The operability assurance (OA) vibration test will be performed on a M&B C-125 Vibration Table.

This system is capable of a 10,000 pound force output (sine wave) and a 8,000 pound force output (rms-random) over a frequency range of 5 to 3000 cps. It has a limited table velocity of 70 inches/sec, and a limited table displacement of ±1/2 inch.

A "Mosely Autograph" analog plotter, Model 135, will be used for plotting input g or g^2/cps versus frequency.

Accelerometers, Model Endevco 2213C (or equivalent) are used as sensors. These have a sensitivity of approximately 30 millivolts per "G" and a resonant frequency above 14,000 cps.

3.3.5 RSD ACOUSTIC TEST FACILITY

A 40' x 20' x 15' Reverberent chamber located in the structures lab of RSD will be used for the acoustic noise test. This chamber has a broad band random noise source capable of producing the required spectrum and power output specified in the GA testing instructions.

3.3.5.1 Sound Pressure Level System

System consists of condenser type microphones, magnetic tape recorders, 1/3 octave band audio frequency spectometer, level recorder and true rms vacuum tube voltmeters.

3.3.5.2 Strain Recording System

System consists of strain gage dynamic balancing system, carrier amplifier magnetic tape system and a recording oscillograph.

3.3.5.3 Accelerometer Recording System

System consists of a 14 channel FM magnetic tape recorder, recording oscillographs, linear/integrating amplifiers and cathode followers.

3.3.6 GROUND SUPPORT EQUIPMENT (GSE)

The GSE to be used for the checkout and testing of the engineering models of SNAP-27 generator assemblies is composed of three consoles, an engineering test monitor-console, a readout console and an IPU simulator console.

3.3.6.1 Engineering Test Monitor Console (Figure 3-4 Serial No. 6306004 for Model No. 8)

The console is composed of seven panels; a GPC mode control, sensor panel, performance map panel, EFCS control panel, EFCS power supply, AC control panel, reference junction and a rear connector panel. This console is capable of meeting the required specification of ERNS 4395-01-15 for a minimum of 2000 hours with reasonable adjustments and replacement of parts.

a. GPC Mode Control Panel - The GPC mode control panel shall have the capability of operating the IPU with a power conditioning package attached. The GPC Panel shall sense the E, I and P outputs of the IPU and provide the circuitry to route these parameters in the Performance Test Panels. Capability shall exist in the GPC panel to accept a variable load (0 to 70 watts) from the resistance applied from the Performance Panel. Capability shall also exist to switch the IPU operating mode from the GPC to a fixed or variable load resistance as required.

b. Sensor Panel - The sensor panel shall comprise two analog iron-constantan temperature meters, two analog chromel-alumel temperature meters, and two analog copper-constantan temperature meters.

TYPE	RANGE	TEMP. KNOWLEDGE ACCURACY
Iron-Con	0 - 600°F	±5°F from 450°F to 575°F
Iron-Con	600 - 1200°F	±5°F from 1000 to 1200°F
Chrom-Alumel	0 - 600°F	±5°F from 450 to 575°F
Chrom-Alumel	600 - 1200°F	±5°F from 1000 to 1200°F
Copper-Con	0 - 600°F	±5°F from 450 to 575°F

The panel shall further include an analog pressure indicator which will have a range of 0 - 30 psi and an accuracy of ±3%.

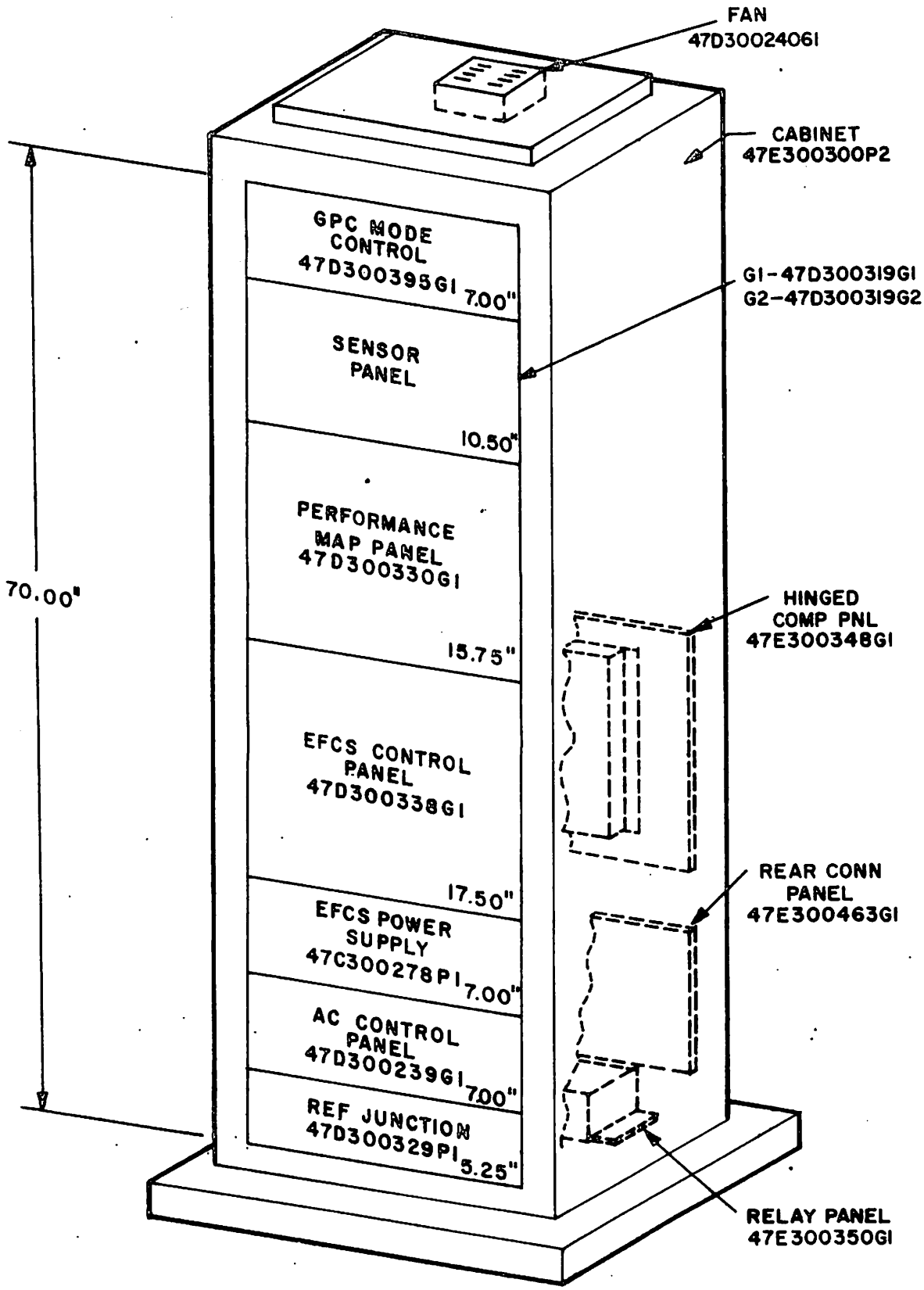

Figure 3-4. Engineering Test Monitor Console

c. Performance Map Panel - The 19 in. x 30 in. x 14 in. Performance Map Panel consists of a resistance thermometer read-out section, a performance map section and test data connectors.

"The Resistance thermometer read-out section (RTD)" provides means for manual selection and analog display of three T_H and three T_c temperature sensors in degrees Fahrenheit. These sensors have a T_H range of 600° to 1200^oF, and a T_c range of 0° to 600^oF.

The "Performance Map Section" provides means for monitoring and visually displaying the potential in vdc, current in amperes, power in watts, variable load resistances in ohms and also measures the elapsed time of these monitored functions:

1. Voltage Monitor and Display - The voltage monitor and display shall provide capability to monitor dc voltage over the range of 0 to 40 vdc in two ranges and shall provide analog display of the voltage to an accuracy of $\pm 1\%$ of full scale. The indicator units shall be vdc.

2. Current Monitor and Display - The current monitor and display shall provide capability to monitor direct current over the range of 0 to 10 amperes and shall provide analog display of the current to an accuracy of $\pm 1\%$ of full scale. The indicator units shall be amperes.

3. Power Monitor and Display - The power monitor and display shall provide capability to monitor power in watts, dc, over the range of 0 to 100 watts and shall provide analog display of the power to an accuracy of $\pm 2\%$. The indicator units shall be watts.

4. Variable Load Resistor and Display - A variable load resistor with a variable resistance between 0 and 20 ohms with a step to open circuit, shall be provided. The display indicator units shall be ohms.

5. Elapsed Time Indicator and Display - The elapsed time indicator and display shall provide capability to measure elapsed time of monitored functions and shall provide a digital display of elapsed time in hours and tenths of hours to an accuracy of $\pm 2\%$.

6. Test Data Connector - A test data connector shall be provided.

d. Electric Fuel Capsule Simulator (EFCS) Power Control Panel - The EFCS Control Panel shall consist of the following sections with the capability of providing the performance specified:

1. EFCS Control Circuit Section

(a) Power Controller - The power controller shall utilize power sensing techniques, shall be adjustable from 1200 to 1700 watts and shall maintain a particular power setting in this region to $\pm 1\%$.

(b) Power Indicator - The power indicator shall sense EFCS power and shall provide display of this power in watts to an accuracy of $\pm 1\%$.

(c) AC Line Voltage Indicator - The ac line voltage indicator shall sense a potential of 208 vac 60 cps and shall provide display of this voltage to an accuracy of $\pm 1\%$.

(d) DC Power Supply for EFCS Heaters - The power supply shall have a remotely programmable output from 85 to 115 vdc, 20 amps maximum.

(e) Elapsed Time Indicator and Display - The elapsed time indicator and display shall provide capability to measure elapsed time of monitored functions and shall provide digital display of elapsed time in hours and tenths of hours to an accuracy of $\pm 2\%$.

(f) Current Indicator - The current indicator shall sense the current supplied to the EFCS and shall provide display of the current in amperes over a range of 0 - 20 amps dc to an accuracy of $\pm 1\%$.

(g) Voltage Indicator - The voltage indicator shall sense the potential across the EFCS lead pigtail and shall provide display over a range of 0 - 150 volts to an accuracy of $\pm 1\%$ in the 25 - 115 v region.

(h) Test Data Connector - A test data connector or individual test jacks shall be provided. The available test monitor shall include:

- Line voltage (E line)
- Current (I_{EFCS})
- Voltage (E_{EFCS})
- Power (P_{EFCS})

2. Safety Monitor Section - The safety monitor section shall monitor one selected T_H sensor and shall de-energize the electric fuel capsule simulator (EFCS) power source should a predetermined T_H level be exceeded. The panel shall include an over temperature monitor device. The level set shall be variable from 1100°F to 1175°F.

e. EFCS Power Supply - An 18 in. x 18 in. x 7 in. panel shall provide the primary input power, which shall be 120 vac ±5%, 1 Ø, 60 cycle, 3 wire (2 power leads, 1 facility ground) and 208 vac ±5%, line to line, 60 cycle, 3 wire (2 power leads, 1 facility ground).

f. AC Control Panel - The ac control panel shall accept the required ac input power to this console, control the application of said line power via ac controllers and distribute said power to the console power distribution system.

g. Ref Junction Panel - The reference junction panel shall provide the electrical reference junctions for ten iron-constantan and fifteen chromel-alumel thermocouples.

h. Rear Connector Panel - A rear connector panel shall be included in the Engineering Test Monitor Console. The panel shall be mounted near the bottom of the console and shall contain:

1. Connectors which will interface with power, EFCS, and instrumentation cabling for the Engineering Model Generators 8.

2. Connectors which will interface with cabling for the Readout Console and Permanent Record Patch Panel.

3.3.6.2 Readout Console (Figure 3-5 - Serial No. 6308001)

The readout console accepts the analog monitors obtained in the engineering test console and displays them in digital form, and will be used in conjunction with all the engineering consoles. The console is composed of eight panels: the T/C panel, RTD panel, IPU monitor, oscilloscope panel, universal bridge, patch panel, ac control panel and a rear connector panel. The primary input power to the test panels is 120 vac ±5%, 1 Ø, 60 cycles, 3 wire (2 power leads, 1 facility ground).

a. Thermocouple (T/C) Panel - The T/C panel shall comprise two T/C digital thermometers. One T/C thermometer shall accommodate iron-constantan and one T/C thermometer shall accommodate chromel-alumel. The iron-constantan T/C meter shall be

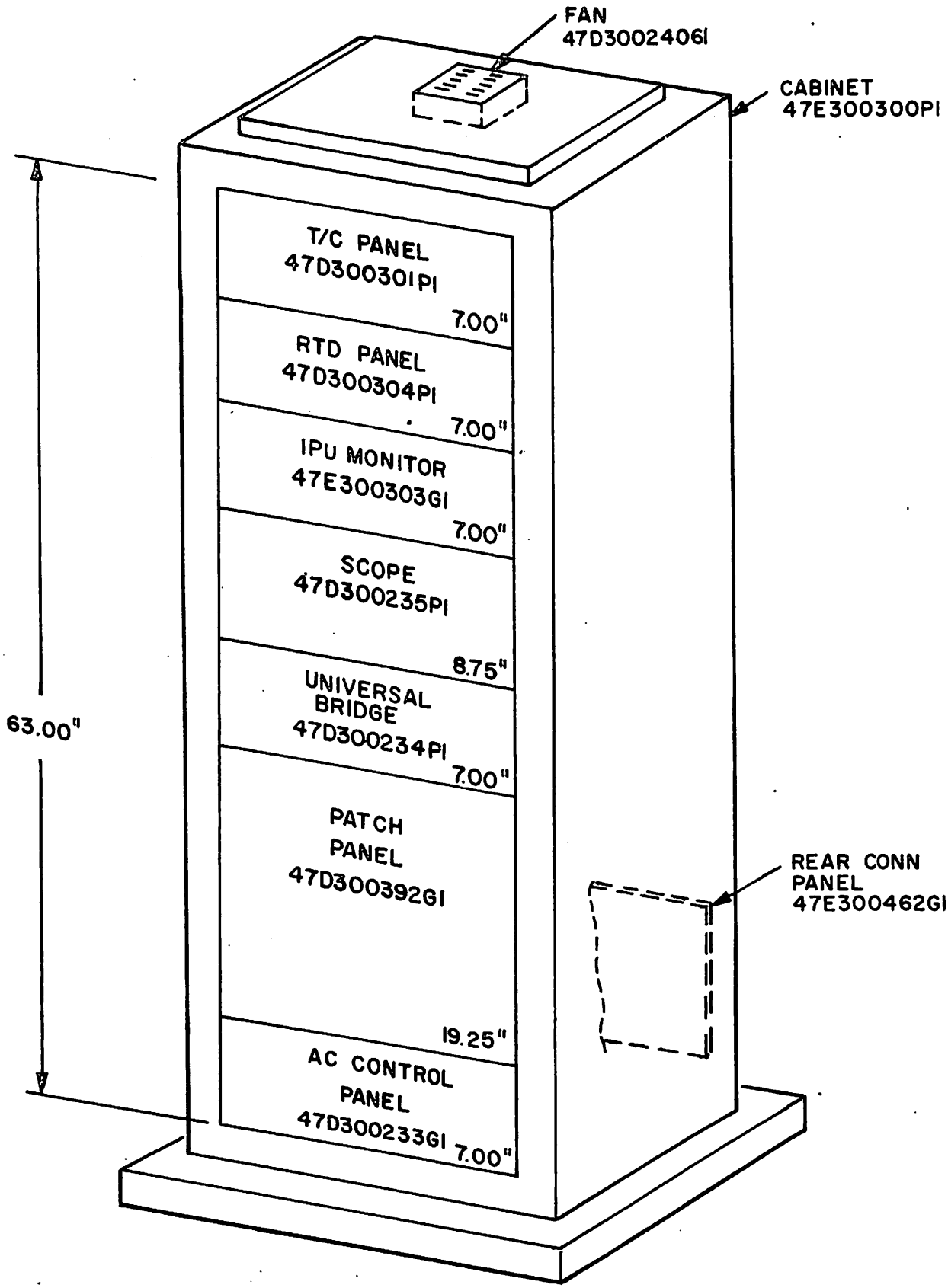

Figure 3-5. Readout Console

floating and be capable of operation with T/C readings which are 16 vac above ground. Both T/C meters shall have a range of 0 - 1200°F and be accurate to ±5°F from 400 - 575°F and 1000 to 1200°F. Both meters shall have self contained reference junctions. The T/C digital thermometers shall accept sensor data via two conductor connection to the patch panel defined in Paragraph 3.3.6.2f for this console.

b. RTD/Panel - The RTD/Panel shall contain one RTD digital thermometer and one copper-constantan digital thermometer. The RTD meter shall have a range of 0 - 1200°F and be accurate to ±5°F from 400 to 575°F and 1000 to 1200°F. The digital sensors shall accept data via two conductor connection to the patch panel defined in Paragraph 3.3.6.2f for this console.

c. IPU Monitor - The IPU monitor panel shall contain a digital readout device with means to indicate E in volts, I in amps, and P in watts. Accuracy of digital readout shall be within ±1% of absolute true values.

d. Oscilloscope Panel - The oscilloscope panel shall be capable of displaying the instantaneous E and I characteristics of the IPU. The scope characteristics shall be:

1.	Bandwidth	dc to 450 kc
2.	Sensitivity	10 mv/cm to 10 v/cm
3.	Sweep Range	1μ sec/cm to 200 m sec/cm

e. Universal Bridge - Universal Bridge panel shall be capable of measuring the R, L and C of the IPU. The ranges and accuracies required are:

C - 1 pf to 1μ f ± 1%

R - 10 milliohms to 10 ohms ± 2%

L - 1μ h to 1 millihenry ± 2%

f. Patch Panel - The patch panel shall be capable of accepting all sensor inputs from the rear connector panel and connecting same via a patching arrangement to the applicable digital meter.

g. AC Control Panel - The ac control panel shall accept the required ac input power to this console, control the application of said line power via ac controllers and distribute said power to the console power distribution system.

h. Read Connector Panel - A rear connector panel shall be included in the Readout Console. The panel shall be mounted near the bottom of the console and shall contain:

1. Connectors which will interface with cabling from the Engineering Test Monitor Console

2. Connectors which will interface with the cabling for the Qual Test Monitor Console

3.3.6.3 IPU Simulator Console (Figure 3-6 - Serial No. 6309001 and 6309002)

The IPU Simulator Console is to be used to check out and test all the ground support equipment. It is composed of five panels; the IPU simulator panel, power supply, ac control panel, blower, and rear connector panel.

a. IPU Simulator Panel - The IPU simulator section shall contain a 0 to 35 vdc, 5 amp power supply and a 0 - 5 ohm variable resistor in series with the power supply output.

1. RTD Section - The RTD section shall contain resistors which will simulate the RTD sensors at elevated temperatures.

2. T/C Section - The T/C section shall contain at least one iron-constantan T/C, one chromel-alumel T/C and one copper-constantan T/C. The T/C's shall be mounted in such a manner relative to the EFCS section so as to have above ambient inputs.

3. EFCS Section - The EFCS section shall contain a resistive load which will simulate the EFCS heater.

b. Power Supply - The primary input power to the test panels shall be 120 vac, $\pm 5\%$, 1 Ø, 60 cps, 3 wire (2 power leads, 1 facility ground).

c. AC Control Panel - The ac control panel shall accept the required ac input power to this console, control the application of said line power via ac controllers and distribute said power to the console power distribution system.

d. Blower - The blower shall be used to cool the console components.

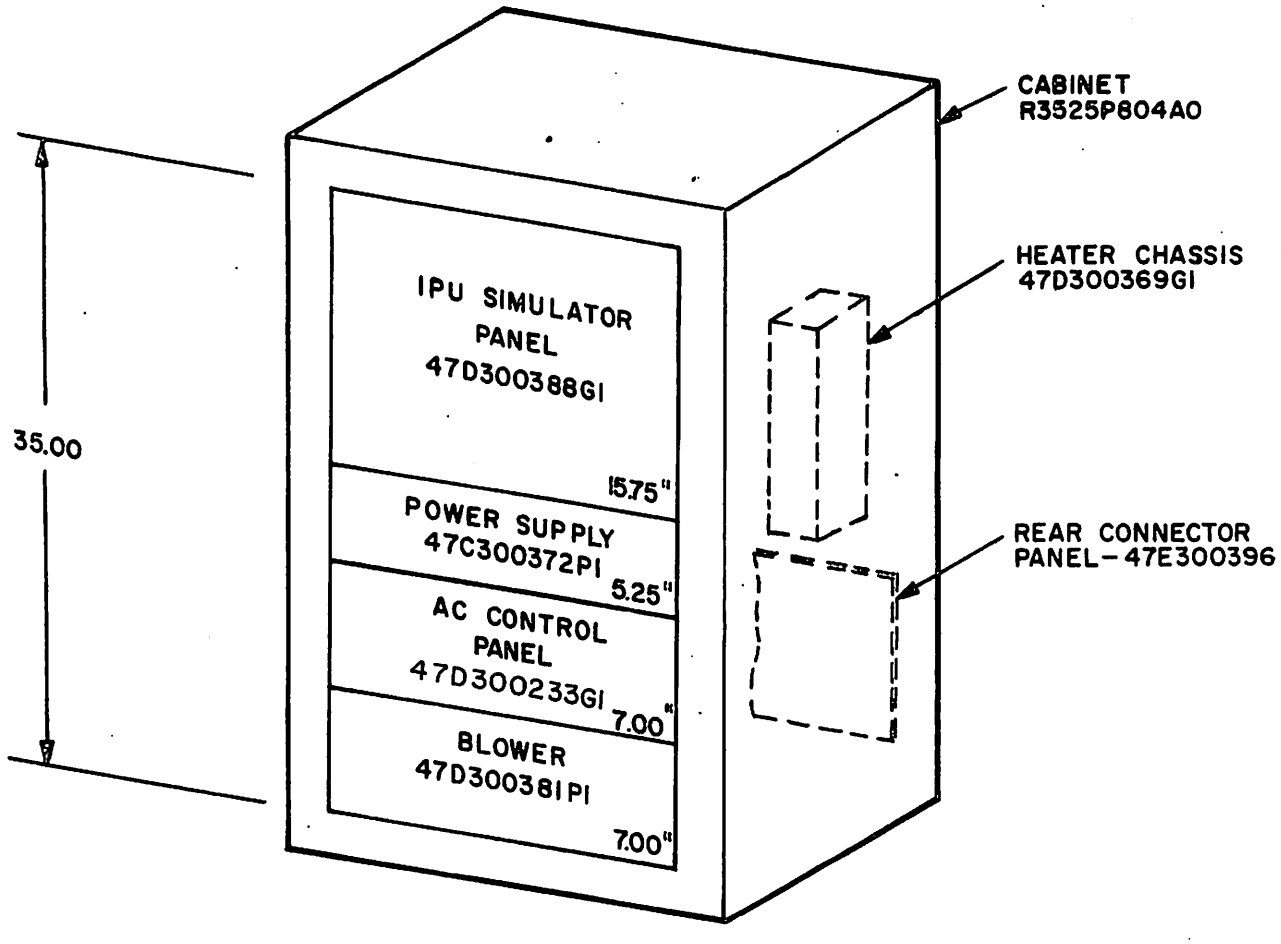

Figure 3-6. IPU Simulator Console

e. Rear Connector Panel - The connector section shall provide connectors to interface with the test monitor console. It shall be used for checkout of the engineering test monitor consoles, qualification test monitor console, the deliverable units of the performance map panel, and the EFCS Power Supply Control Panel.

3.3.7 MILLIOHMMETER

A 7-1/2 pound portable Keithley Milliohmmeter, Model 502 A, shall be used to take resistance and continuity checks on the GA. This battery operated unit measures a range of 0.001 to 1000 ohms, within an accuracy of 3%. It has a voltage-limited mode which limits the voltage applied across a sample to 25 mv peak to peak. Limiting the maximum voltage applied to the sample permits dry circuit testing without breaking down thin insulating films. A four-terminal measuring system is used to eliminate errors due to lead and contact resistance.

3.3.8 CENTRIFUGAL ACCELERATION MACHINE

A centrifugal acceleration machine, model RCT-2, shall be used for performing acceleration tests. This machine has the capability of rotating at speeds from 5 to 300 rpm, and produces loads up to 15,000g - pounds.

The rotating arm has a mounting fixture capable of holding pieces up to a 24 in. cube size. It has a radius of rotation extending from 24 in. to 48 in., with the center line of a 24 in. cube being at 36 in. The base plate of the machine's mounting fixture can be raised or lowered in three inch increments to facilitate centralizing of the test specimen.

3.3.9 3M COMPANY TEST EQUIPMENT (Figure 3-7)

The test equipment specified for use for the initial performance evaluation and acceptance testing at VFSTC is as follows.

1) Generator Test Console Assembly (as specified on 3M print PD-45-2331).

2) Environmental Test Chamber Assembly (as specified on 3M print PD-45-2371).

3) Digital Voltmeter (DIGLTEC Model No. 201)

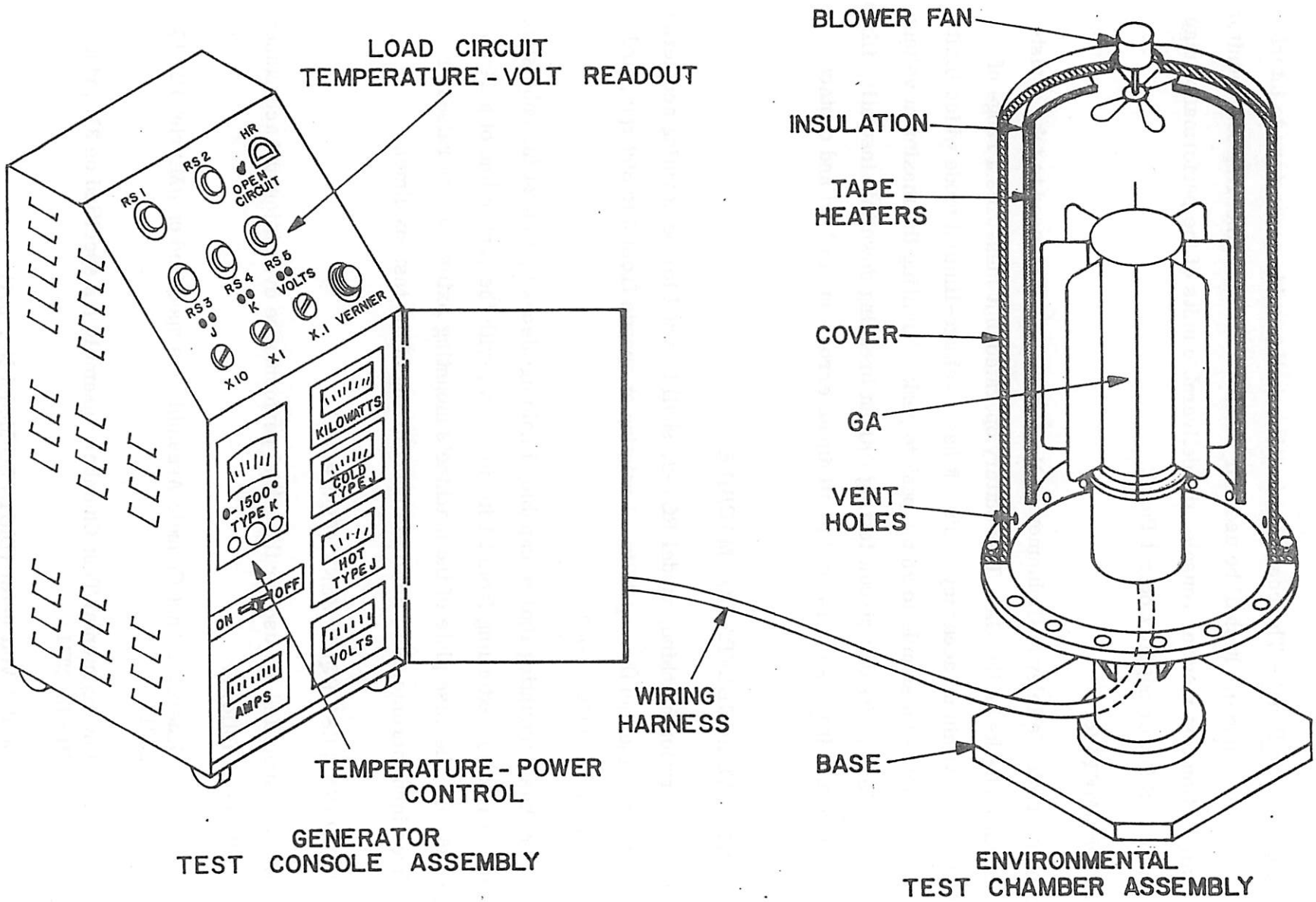

Figure 3-7. 3M Supplied Equipment

4) Temperature Meter (Howell Model BH180 Type K)

5) Temperature Meter (Howell Model BH180 Type J)

3.3.10 GE MODEL LC-20 MASS SPECTROMETER AND ASSOCIATED VACUUM EQUIPMENT

The General Electric Model LC-20 Helium Mass Spectrometer Leak Detector will be used in the ANSO Lab to locate and determine the leak rate of a minute leak in the GA pressurized system.

A complete self-contained bell jar vacuum system is provided as part of the leak detector system which can attain pressures less than 1×10^{-6} Torr.

Leaks are located by the use of a helium tracer gas which has been introduced into the GA pressure system. While the GA is in the bell jar under a pressure of 10^{-6} Torr, the leak detector is used to draw a sample of gas from within the jar. The detector develops an electrical signal proportional to the number of helium molecules in the sample of gas. The output meter on a portable indicator indicates that a leak exists in the GA, and also denotes the size of the leak.

SECTION 4.0

PRE-TEST REQUIREMENTS AND OPERATIONS

4.1 LEAK TESTS

All test apparatus, exclusive of the pressurization equipment, shall be calibrated at the beginning of each leak test.

4.2 FIXTURE VIBRATION TESTS

Prior to conducting the vibration test with an actual component, the shaker and fixture shall be subjected to a resonance search. A dummy GA shall be designed to simulate the mass, center of gravity, and mounting arrangement of the actual GA to be tested.

With the dummy mounted on the fixture, and the fixture mounted on the shaker with accelerometers, the following procedure will be followed.

a. The frequency band from 5 to 2000 cycles per second shall be swept at a rate slow enough to clearly identify the amplification and bandwidth of each resonance whose amplification is greater than three. The fixture shall be modified until all resonance is eliminated to the greatest extent possible.

b. The vibration response shall be monitored, through the entire frequency range in three orthogonal directions, at the critical attachment points of the dummy to the fixture. The amplitude readings normal to the direction of excitation shall not be greater than 50 percent of the maximum level in the direction of excitation. The maximum and minimum amplitude readings taken in the direction of the shaker, at the attachment points, shall not differ from each other by more than 50 percent.

Resonance frequencies, bandwidth, and amplification of all resonances shall be noted and recorded.

c. The vibration amplitude shall be varied with frequencies as follows:

RESONANCE SEARCH LEVELS

FREQUENCY (CPS)	AMPLITUDE
5-17 cps	± 0.1 inch
17-2000 cps	± 3G

d. Equalization - All specified power spectral density input to the GA for all tests shall be within ±3 db in the frequency range of 20-300 cps and within +6 db and -3 db in the frequency range of 300-2000 cps, using analyzing filters with a maximum permissible filter bandwidth of 50 cps.

The overall "g" (rms) level in the range of 5 to 2000 cps shall be maintained within ±10 percent of the nominal G (rms) level specified. The attenuation below 5 cps and above 2000 cps shall be greater than 2 db/octave. The following analyzer characteristics shall be reported for each test:

1) Filter Bandwidth

2) Integrator Time Constant

3) Amplitude Accuracy

4.3 INSTRUMENTATION SYSTEM

Quality Control and Test personnel shall install thermocouples onto the vacuum chamber, and support fixture. The location of the 50 thermocouples in the vacuum chamber shall be in accordance with Figures 4-1, 4-2, and 4-3. The location of the 47 thermocouples on the mounting fixture must be in accordance with Figure 4-4. The generator assembly shall be externally instrumented with 6 RTD's and 15 chromel-alumel T/C's as shown in Table 4-1 (Reference Drawing 47R300334) and Figure 4-5. The EFCS will be instrumented with ten T/C's as shown in Figure 4-6.

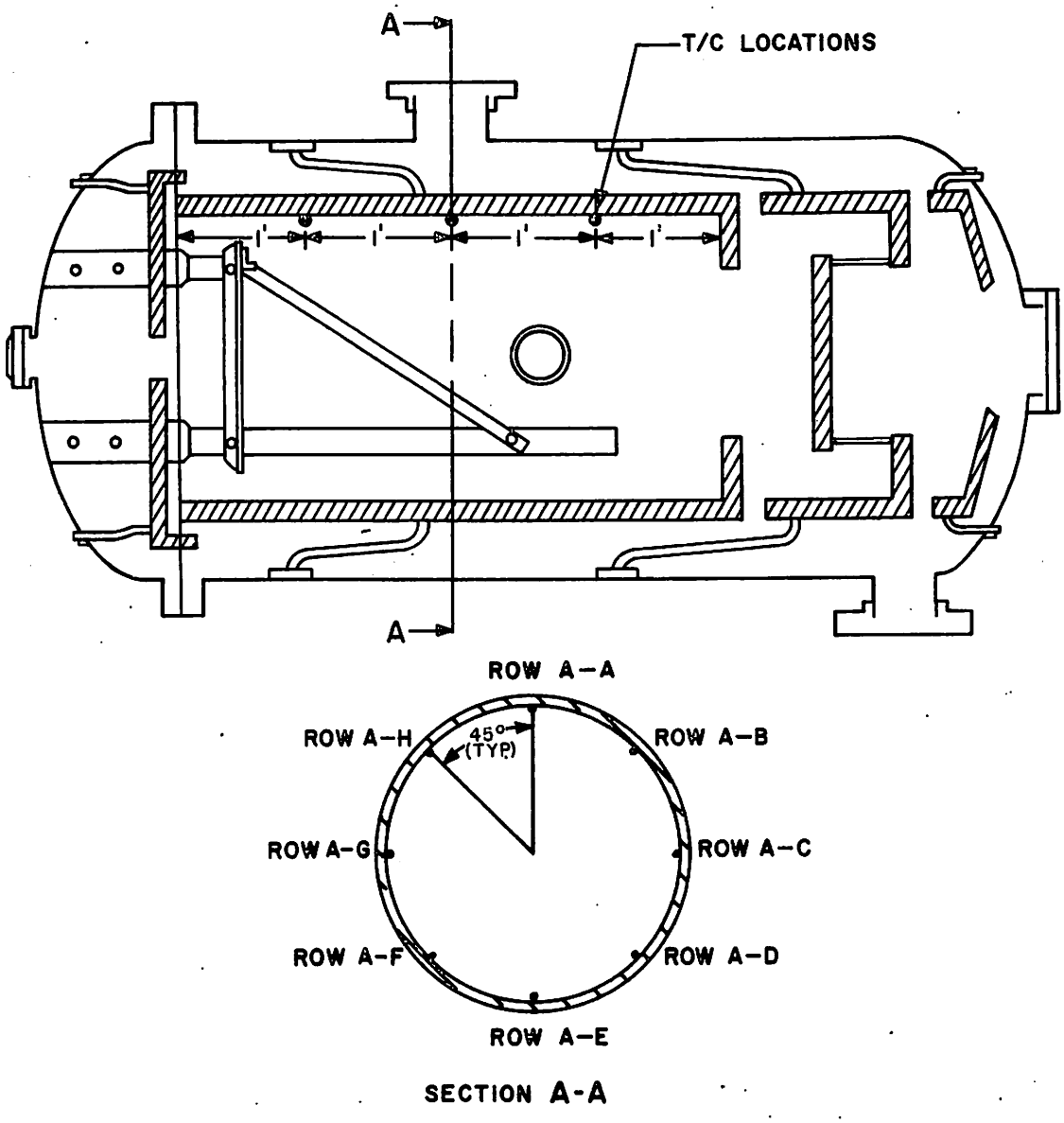

THERMOCOUPLE LOCATIONS (24T/C's)

LINE	ROW							
	A-A	A-B	A-C	A-D	A-E	A-F	A-G	A-H
1	TCP-1	TCP-2	TCP-3	TCP-4	TCP-5	TCP-6	TCP-7	TCP-8
2	TCP-9	TCP-10	TCP-11	TCP-12	TCP-13	TCP-14	TCP-15	TCP-16
3	TCP-17	TCP-18	TCP-19	TCP-20	TCP-21	TCP-22	TCP-23	TCP-24

Figure 4-1. Vacuum Chamber Cylinder Thermocouple Locations on Thermal Shroud

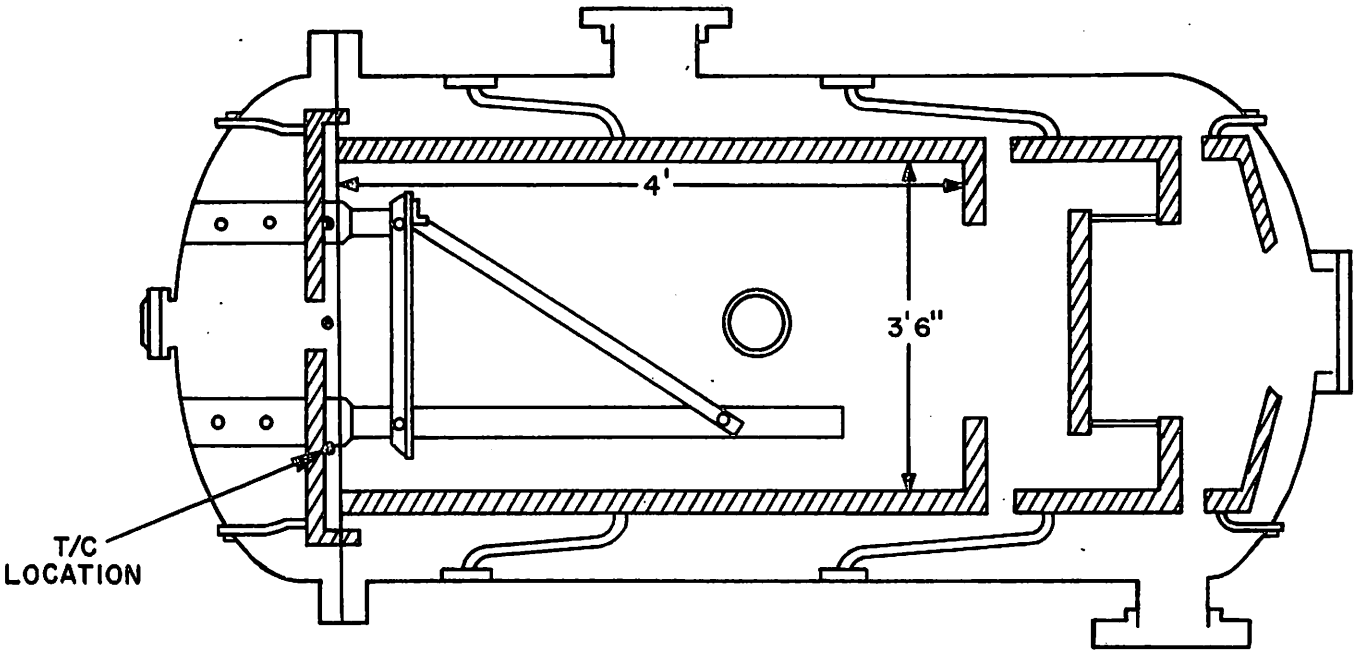

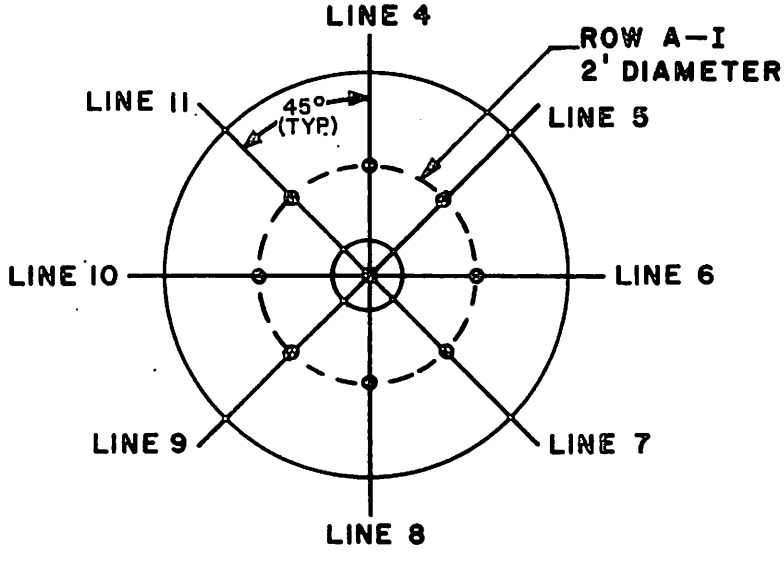

DOLLY DOOR THERMAL SHROUD

9 T/C'S - CENTER T/C NO. IS TCP-25

ROW	LINE							
	4	5	6	7	8	9	10	11
A-1	TCP-26	TCP-27	TCP-28	TCP-29	TCP-30	TCP-31	TCP-32	TCP-33

Figure 4-2. Dolly Door Thermal Shroud Thermocouple Locations

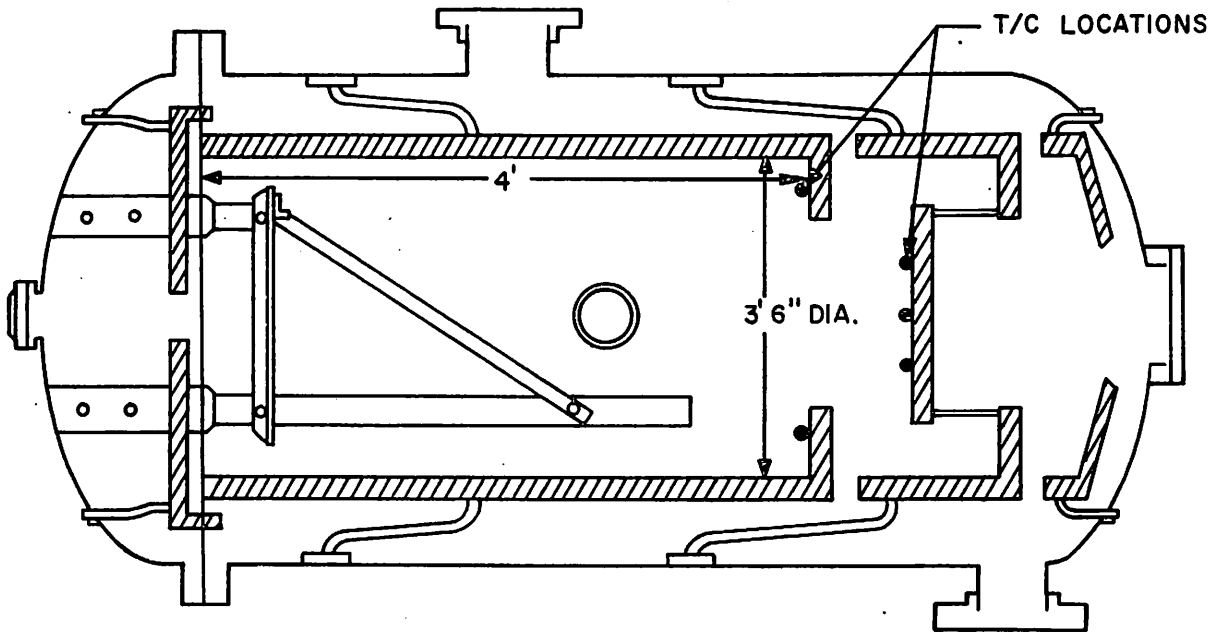

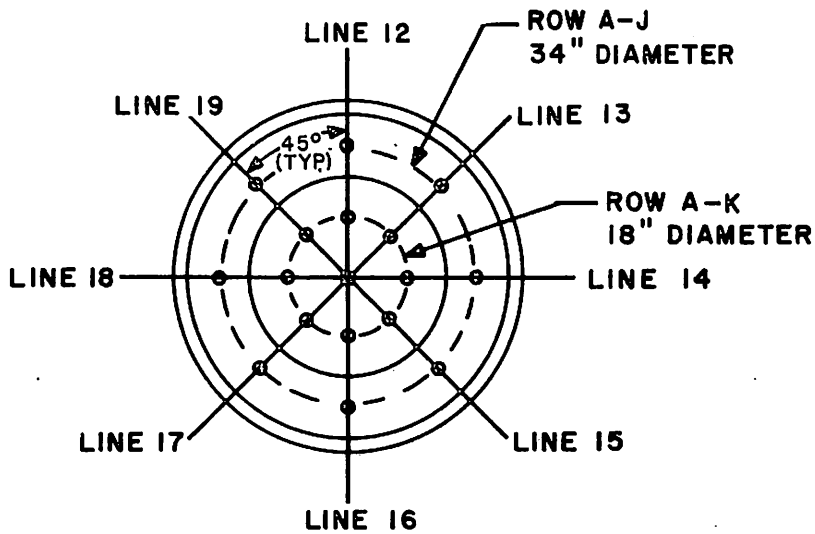

17 T/C's CENTER T/C NO. IS TCP-34

ROW	LINE							
	12	13	14	15	16	17	18	19
A-J	TCP-35	TCP-36	TCP-37	TCP-38	TCP-39	TCP-40	TCP-41	TCP-42
A-K	TCP-43	TCP-44	TCP-45	TCP-46	TCP-47	TCP-48	TCP-49	TCP-50

Figure 4-3. End-Plates Thermocouple Locations

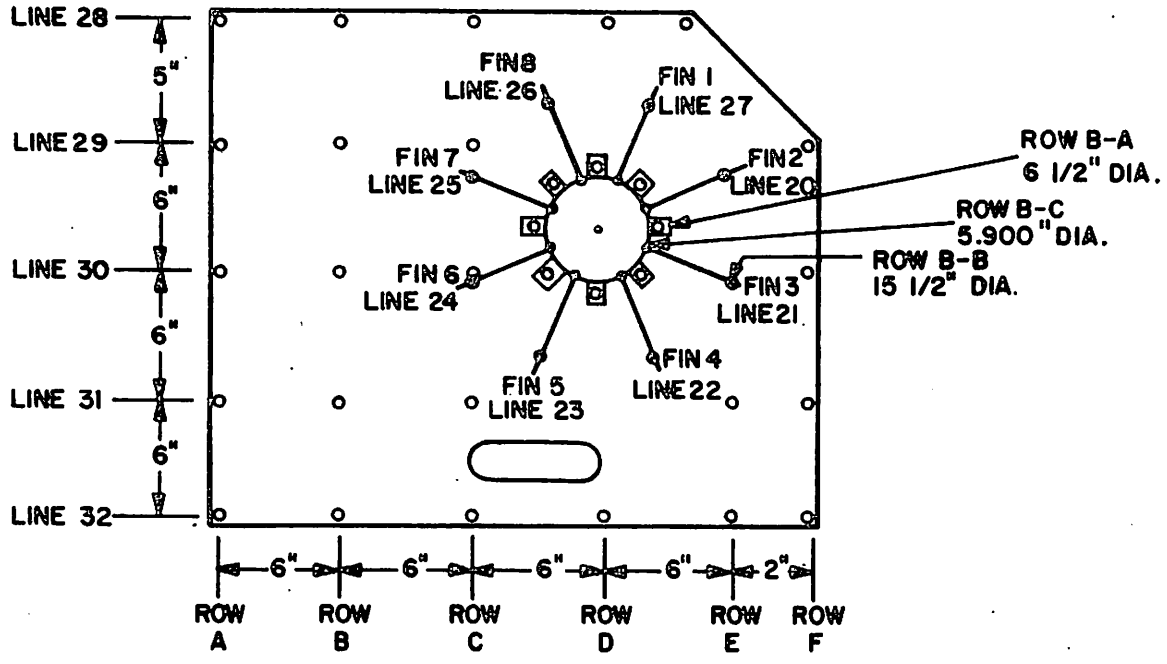

47 T/C's - CENTER T/C NO. IS TSP-1

LINE	ROW								
	B-A	B-B	B-C	A	B	C	D	E	F
20	TSP-2	TSP-10	TSP-18	X	X	X	X	X	X
21	TSP-3	TSP-11	TSP-19	X	X	X	X	X	X
22	TSP-4	TSP-12	TSP-20	X	X	X	X	X	X
23	TSP-5	TSP-13	TSP-21	X	X	X	X	X	X
24	TSP-6	TSP-14	TSP-22	X	X	X	X	X	X
25	TSP-7	TSP-15	TSP-23	X	X	X	X	X	X
26	TSP-8	TSP-16	TSP-24	X	X	X	X	X	X
27	TSP-9	TSP-17	TSP-25	X	X	X	X	X	X
28	X	X	X	TSP-26	TSP-31	TSP-36	TSP-39	TSP-41	X
29	X	X	X	TSP-27	TSP-32	X	X	X	TSP-44
30	X	X	X	TSP-28	TSP-33	X	X	X	TSP-45
31	X	X	X	TSP-29	TSP-34	TSP-37	X	TSP-42	TSP-46
32	X	X	X	TSP-30	TSP-35	TSP-38	TSP-40	TSP-43	TSP-47

Figure 4-4. Support Fixture Thermocouple Locations

TABLE 4-1. GENERATOR ASSEMBLY THERMOCOUPLE LOCATIONS

COUPLE IDENTIFICATION	LOCATION	CIRC. ROW	AXIAL LEG ROW	ATLAM NO.
GA Current (Closed Circuit)	---	---	---	660
GA Voltage (Closed Circuit)	---	---	---	661
R1-1 (RTD)	Hot Frame RTD	$0^{o}/1$	3	662
R1-2 (RTD)	Hot Frame RTD	$111^{o}/9$	17	663
R1-3 (RTD)	Hot Frame RTD	$222^{o}/17$	31	664
TC1-1	Hot Frame T/C	$111^{o}/9$	3	665
TC1-2	Hot Frame T/C	$222^{o}/17$	3	666
TC1-3	Hot Frame T/C	$0^{o}/1$	18	667
TC1-4	Hot Frame T/C	$222^{o}/17$	17	668
TC1-5	Hot Frame T/C	$0^{o}/1$	31	669
TC1-6	Hot Frame T/C	$111^{o}/9$	31	670
TC2-1 (Hot Junction)	Thermopile T/C	25	2	671
TC2-2 (Cold Junction)	Thermopile T/C	25	2	672
TC2-3 (Hot Junction)	Thermopile T/C	9	16	673
TC2-4 (Cold Junction)	Thermopile T/C	9	16	674
TC2-5 (Hot Junction)	Thermopile T/C	17	16	675
TC2-6 (Cold Junction)	Thermopile T/C	17	16	676
TC2-7 (Hot Junction)	Thermopile T/C	1	19	677
TC2-8 (Cold Junction)	Thermopile T/C	1	19	678
TC2-9 (Hot Junction)	Thermopile T/C	3	30	679
TC2-10 (Cold Junction)	Thermopile T/C	3	30	680

TABLE 4-1. GENERATOR ASSEMBLY THERMOCOUPLE LOCATIONS (Cont)

COUPLE IDENTIFICATION	LOCATION	CIRC. ROW	AXIAL LEG ROW	ATLAM NO.
R3-1	Outer Shell RTD	1/0°	3	681
R3-2	Outer Shell RTD	9/111°	17	682
R3-3	Outer Shell RTD	17/222°	31	683
TC3-1	Outer Shell T/C	9/111°	3	684
TC3-2	Outer Shell T/C	17/222°	3	685
TC3-3	Outer Shell T/C	1/0°	18	686
TC3-4	Outer Shell T/C	17/222°	17	687
TC3-5	Outer Shell T/C	1/0°	31	688
TC3-6	Outer Shell T/C	9/111°	31	689
TC4-1	Aft Hermetic Seal T/C	See Figure 4-5	See Figure 4-5	690
TC4-2	Aft Hermetic Seal T/C	See Figure 4-5	See Figure 4-5	691
TC4-3	Aft Hermetic Seal T/C	See Figure 4-5	See Figure 4-5	692
TCP-1	Vacuum Chamber Cryopanel	See Figure 4-1	See Figure 4-1	693
TCP-2	Vacuum Chamber Cryopanel	See Figure 4-1	See Figure 4-1	694
TCP-3	Vacuum Chamber Cryopanel	See Figure 4-1	See Figure 4-1	695
TCP-4	Vacuum Chamber Cryopanel	See Figure 4-1	See Figure 4-1	696
TCP-5	Vacuum Chamber Cryopanel	See Figure 4-1	See Figure 4-1	697

TABLE 4-1. GENERATOR ASSEMBLY THERMOCOUPLE LOCATIONS (Cont)

COUPLE IDENTIFICATION	LOCATION	CIRC. ROW	AXIAL LEG ROW	ATLAM NO.
TCP-6	Vacuum Chamber Cryopanel	See Figure 4-1	See Figure 4-1	698
TCP-7	Vacuum Chamber Cryopanel	See Figure 4-1	See Figure 4-1	699
TCP-8	Vacuum Chamber Cryopanel	See Figure 4-1	See Figure 4-1	700
TCP-9	Vacuum Chamber Cryopanel	See Figure 4-1	See Figure 4-1	701
TCP-10	Vacuum Chamber Cryopanel	See Figure 4-1	See Figure 4-1	702
TCP-11	Vacuum Chamber Cryopanel	See Figure 4-1	See Figure 4-1	703
TCP-12	Vacuum Chamber Cryopanel	See Figure 4-1	See Figure 4-1	704
TCP-13	Vacuum Chamber Cryopanel	See Figure 4-1	See Figure 4-1	705
TCP-14	Vacuum Chamber Cryopanel	See Figure 4-1	See Figure 4-1	706
TCP-15	Vacuum Chamber Cryopanel	See Figure 4-1	See Figure 4-1	707
TCP-16	Vacuum Chamber Cryopanel	See Figure 4-1	See Figure 4-1	708
TCP-17	Vacuum Chamber Cryopanel	See Figure 4-1	See Figure 4-1	709
TCP-18	Vacuum Chamber Cryopanel	See Figure 4-1	See Figure 4-1	710
TCP-19	Vacuum Chamber Cryopanel	See Figure 4-1	See Figure 4-1	711

TABLE 4-1. GENERATOR ASSEMBLY THERMOCOUPLE LOCATIONS (Cont)

COUPLE IDENTIFICATION	LOCATION	CIRC. ROW	AXIAL LEG ROW	ATLAM NO.
TCP-20	Vacuum Chamber Cryopanel	See Figure 4-1	See Figure 4-1	712
TCP-21	Vacuum Chamber Cryopanel	See Figure 4-1	See Figure 4-1	713
TCP-22	Vacuum Chamber Cryopanel	See Figure 4-1	See Figure 4-1	714
TCP-23	Vacuum Chamber Cryopanel	See Figure 4-1	See Figure 4-1	715
TCP-24	Vacuum Chamber Cryopanel	See Figure 4-1	See Figure 4-1	716
TCP-25	Dolly Door Cryopanel	See Figure 4-2	See Figure 4-2	717
TCP-26	Dolly Door Cryopanel	See Figure 4-2	See Figure 4-2	718
TCP-27	Dolly Door Cryopanel	See Figure 4-2	See Figure 4-2	719
TCP-28	Dolly Door Cryopanel	See Figure 4-2	See Figure 4-2	720
TCP-29	Dolly Door Cryopanel	See Figure 4-2	See Figure 4-2	721
TCP-30	Dolly Door Cryopanel	See Figure 4-2	See Figure 4-2	722
TCP-31	Dolly Door Cryopanel	See Figure 4-2	See Figure 4-2	723
TCP-32	Dolly Door Cryopanel	See Figure 4-2	See Figure 4-2	724
TCP-33	Dolly Door Cryopanel	See Figure 4-2	See Figure 4-2	725

TABLE 4-1. GENERATOR ASSEMBLY THERMOCOUPLE LOCATIONS (Cont)

COUPLE IDENTIFICATION	LOCATION	CIRC. ROW	AXIAL LEG ROW	ATLAM NO.
TCP-34	End Plate Cryopanel	See Figure 4-3	See Figure 4-3	726
TCP-35	End Plate Cryopanel	See Figure 4-3	See Figure 4-3	727
TCP-36	End Plate Cryopanel	See Figure 4-3	See Figure 4-3	728
TCP-37	End Plate Cryopanel	See Figure 4-3	See Figure 4-3	729
TCP-38	End Plate Cryopanel	See Figure 4-3	See Figure 4-3	730
TCP-39	End Plate Cryopanel	See Figure 4-3	See Figure 4-3	731
TCP-40	End Plate Cryopanel	See Figure 4-3	See Figure 4-3	732
TCP-41	End Plate Cryopanel	See Figure 4-3	See Figure 4-3	733
TCP-42	End Plate Cryopanel	See Figure 4-3	See Figure 4-3	734
TCP-43	End Plate Cryopanel	See Figure 4-3	See Figure 4-3	735
TCP-44	End Plate Cryopanel	See Figure 4-3	See Figure 4-3	736
TCP-45	End Plate Cryopanel	See Figure 4-3	See Figure 4-3	737
TCP-46	End Plate Cryopanel	See Figure 4-3	See Figure 4-3	738
TCP-47	End Plate Cryopanel	See Figure 4-3	See Figure 4-3	739

TABLE 4-1. GENERATOR ASSEMBLY THERMOCOUPLE LOCATIONS (Cont)

COUPLE IDENTIFICATION	LOCATION	CIRC. ROW	AXIAL LEG ROW	ATLAM NO.
TCP-48	End Plate Cryopanel	See Figure 4-3	See Figure 4-3	740
TCP-49	End Plate Cryopanel	See Figure 4-3	See Figure 4-3	741
TCP-50	End Plate Cryopanel	See Figure 4-3	See Figure 4-3	742
TSP-1	Support Fixture	See Figure 4-4	See Figure 4-4	743
TSP-2	Support Fixture	See Figure 4-4	See Figure 4-4	744
TSP-3	Support Fixture	See Figure 4-4	See Figure 4-4	745
TSP-4	Support Fixture	See Figure 4-4	See Figure 4-4	746
TSP-5	Support Fixture	See Figure 4-4	See Figure 4-4	747
TSP-6	Support Fixture	See Figure 4-4	See Figure 4-4	748
TSP-7	Support Fixture	See Figure 4-4	See Figure 4-4	749
TSP-8	Support Fixture	See Figure 4-4	See Figure 4-4	750
TSP-9	Support Fixture	See Figure 4-4	See Figure 4-4	751
TSP-10	Support Fixture	See Figure 4-4	See Figure 4-4	752
TSP-11	Support Fixture	See Figure 4-4	See Figure 4-4	753

TABLE 4-1. GENERATOR ASSEMBLY THERMOCOUPLE LOCATIONS (Cont)

COUPLE IDENTIFICATION	LOCATION	CIRC. ROW	AXIAL LEG ROW	ATLAM NO.
TSP-12	Support Fixture	See Figure 4-4	See Figure 4-4	754
TSP-13	Support Fixture	See Figure 4-4	See Figure 4-4	755
TSP-14	Support Fixture	See Figure 4-4	See Figure 4-4	756
TSP-15	Support Fixture	See Figure 4-4	See Figure 4-4	757
TSP-16	Support Fixture	See Figure 4-4	See Figure 4-4	758
TSP-17	Support Fixture	See Figure 4-4	See Figure 4-4	759
TSP-18	Support Fixture	See Figure 4-4	See Figure 4-4	760
TSP-19	Support Fixture	See Figure 4-4	See Figure 4-4	761
TSP-20	Support Fixture	See Figure 4-4	See Figure 4-4	762
TSP-21	Support Fixture	See Figure 4-4	See Figure 4-4	763
TSP-22	Support Fixture	See Figure 4-4	See Figure 4-4	764
TSP-23	Support Fixture	See Figure 4-4	See Figure 4-4	765
TSP-24	Support Fixture	See Figure 4-4	See Figure 4-4	766
TSP-25	Support Fixture	See Figure 4-4	See Figure 4-4	767

TABLE 4-1. GENERATOR ASSEMBLY THERMOCOUPLE LOCATIONS (Cont)

COUPLE IDENTIFICATION	LOCATION	CIRC. ROW	AXIAL LEG ROW	ATLAM NO.
TSP-26	Support Fixture	See Figure 4-4	See Figure 4-4	768
TSP-27	Support Fixture	See Figure 4-4	See Figure 4-4	769
TSP-28	Support Fixture	See Figure 4-4	See Figure 4-4	770
TSP-29	Support Fixture	See Figure 4-4	See Figure 4-4	771
TSP-30	Support Fixture	See Figure 4-4	See Figure 4-4	772
TSP-31	Support Fixture	See Figure 4-4	See Figure 4-4	773
TSP-32	Support Fixture	See Figure 4-4	See Figure 4-4	774
TSP-33	Support Fixture	See Figure 4-4	See Figure 4-4	775
TSP-34	Support Fixture	See Figure 4-4	See Figure 4-4	776
TSP-35	Support Fixture	See Figure 4-4	See Figure 4-4	777
TSP-36	Support Fixture	See Figure 4-4	See Figure 4-4	778
TSP-37	Support Fixture	See Figure 4-4	See Figure 4-4	779
TSP-38	Support Fixture	See Figure 4-4	See Figure 4-4	780
TSP-39	Support Fixture	See Figure 4-4	See Figure 4-4	781

TABLE 4-1. GENERATOR ASSEMBLY THERMOCOUPLE LOCATIONS (Cont)

COUPLE IDENTIFICATION	LOCATION	CIRC. ROW	AXIAL LEG ROW	ATLAM NO.
TSP-40	Support Fixture	See Figure 4-4	See Figure 4-4	782
TSP-41	Support Fixture	See Figure 4-4	See Figure 4-4	783
TSP-42	Support Fixture	See Figure 4-4	See Figure 4-4	784
TSP-43	Support Fixture	See Figure 4-4	See Figure 4-4	785
TSP-44	Support Fixture	See Figure 4-4	See Figure 4-4	786
TSP-45	Support Fixture	See Figure 4-4	See Figure 4-4	787
TSP-46	Support Fixture	See Figure 4-4	See Figure 4-4	788
TSP-47	Support Fixture	See Figure 4-4	See Figure 4-4	789
TPT-1	Pressure Transducer	See Figure 4-5	See Figure 4-5	790
TPT-2	Pressure Transducer	See Figure 4-5	See Figure 4-5	791
EFCS Analog Voltage	---	---	---	792
TFC-1	Electric Fuel Capsule Sim.	See Figure 4-6	See Figure 4-6	793
TFC-2	Electric Fuel Capsule Sim.	See Figure 4-6	See Figure 4-6	794
TFC-3	Electric Fuel Capsule Sim.	See Figure 4-6	See Figure 4-6	795

TABLE 4-1. GENERATOR ASSEMBLY THERMOCOUPLE LOCATIONS (Cont)

COUPLE IDENTIFICATION	LOCATION	CIRC. ROW	AXIAL LEG ROW	ATLAM NO.
TFC-4	Electric Fuel Capsule Sim.	See Figure 4-6	See Figure 4-6	796
TFC-5	Electric Fuel Capsule Sim.	See Figure 4-6	See Figure 4-6	797
TFC-6	Electric Fuel Capsule Sim.	See Figure 4-6	See Figure 4-6	798
TFC-7	Electric Fuel Capsule Sim.	See Figure 4-6	See Figure 4-6	799
TFC-8	Electric Fuel Capsule Sim.	See Figure 4-6	See Figure 4-6	800
TFC-9	Electric Fuel Capsule Sim.	See Figure 4-6	See Figure 4-6	801
TFC-10	Electric Fuel Capsule Sim.	See Figure 4-6	See Figure 4-6	802
GA Voltage (open circuit)	----	---	---	803
Pressure Trans. Voltage	----	---	---	804

4.3.1 THERMOCOUPLE INSTALLATION

The 3M Company shall install the following internal thermocouples on the generator assembly (Reference Drawing 47R300195).

a. Hot Electrode (Internal) - Five-iron-constantan thermocouples. One each at the following locations:

T/C NO.	AXIAL LEG ROW	CIRCUMFERENTIAL ROW
TC2-1	2	25
TC2-3	16	9
TC2-5	16	17
TC2-7	19	1
TC2-9	30	3

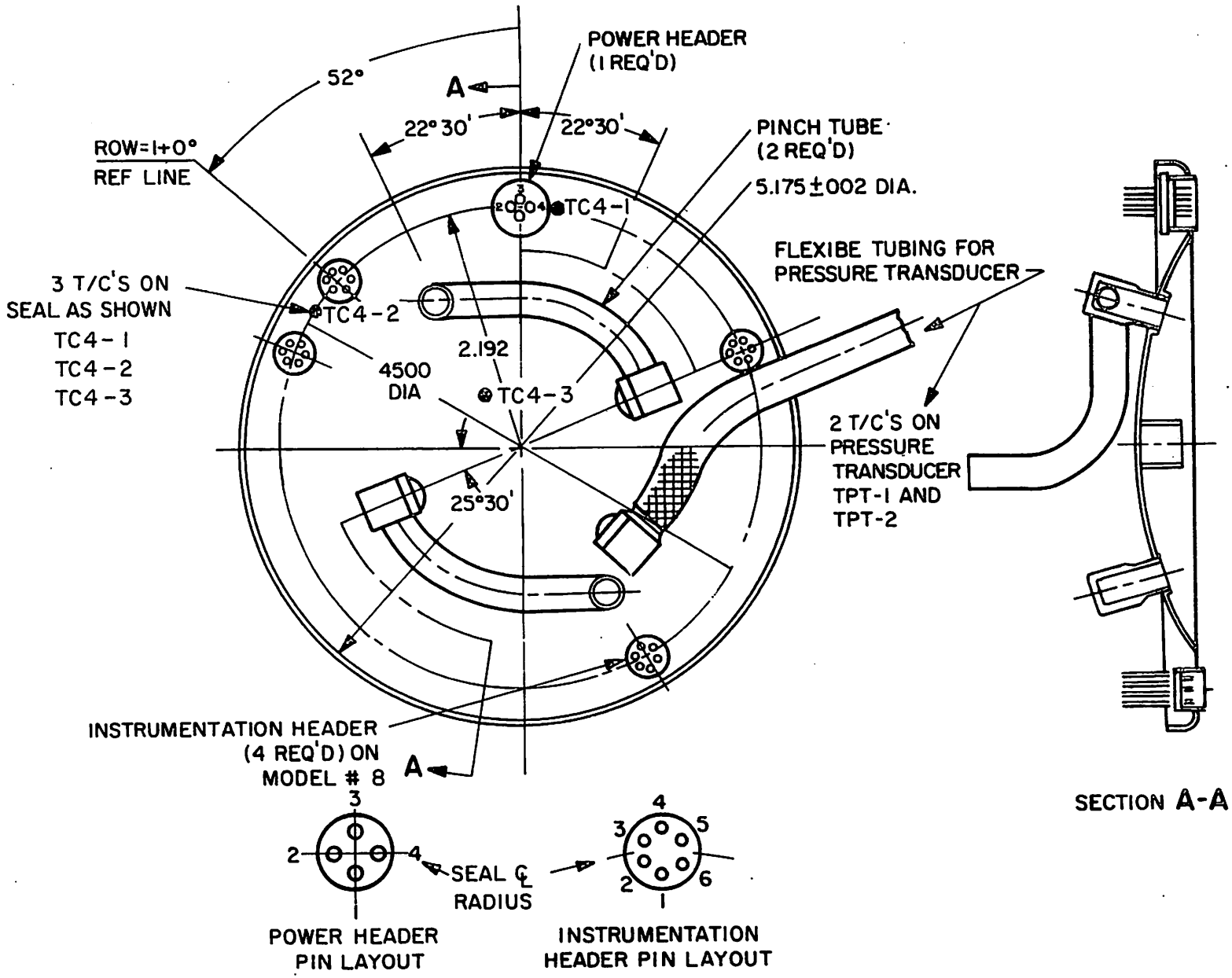

Figure 4-5. Generator Assembly Aft Seal Thermocouple Locations

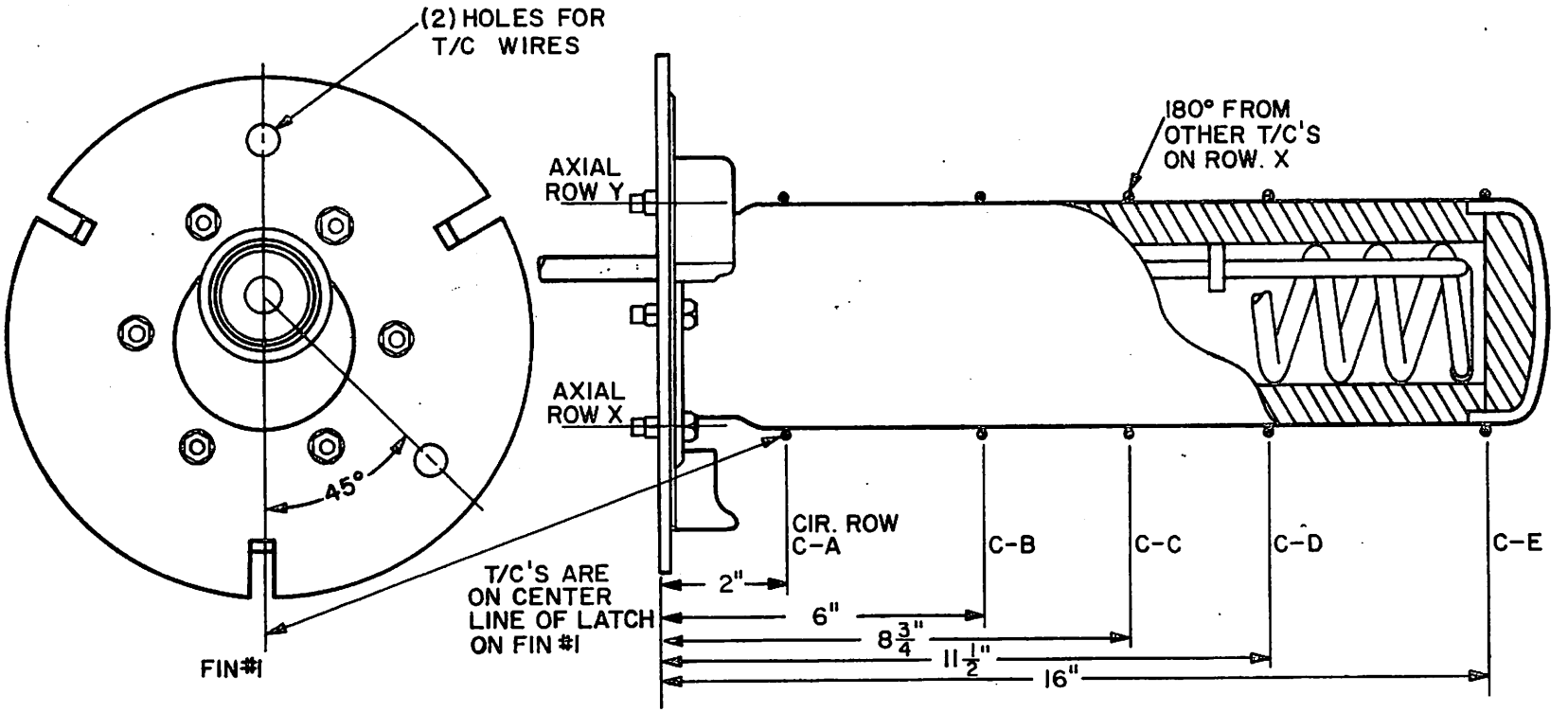

AXIAL ROW	CIRCUM. ROW				
	C-A	C-B	C-C	C-D	C-E
X	TFC-1	TFC-2	TFC-3	TFC-4	TFC-5
Y	TFC-6	TFC-7	TFC-8	TFC-9	TFC-10

Figure 4-6. Electric Fuel Capsule Simulator (EFCS) Thermocouple Locations

b. Cold Electrode (Internal) - Five-iron-constantan thermocouples. One each at the following locations:

T/C NO.	AXIAL LEG ROW	CIRCUMFERENTIAL ROW
TC2-2	2	25
TC2-4	16	9
TC2-6	16	17
TC2-8	19	1
TC2-10	30	3

3M shall install the following external temperature RTD's and thermocouples:

a. Hot Frame (External)

1. Three platinum resistance thermometers. One each at the following locations:

RTD NO.	AXIAL LEG ROW	CIRCUMFERENTIAL ROW
R1-1	3	1
R1-2	17	9
R1-3	31	17

2. Six chromel-alumel thermocouples. One each at the following locations:

T/C NO.	AXIAL LEG ROW	CIRCUMFERENTIAL ROW
TC1-3	18	1
TC1-1	3	9
TC1-2	3	17
TC1-5	31	1
TC1-6	31	9
TC1-4	17	17

b. Outer Shell (External)

1. Three platinum resistance thermometers. One each at the following locations:

RTD NO.	AXIAL LEG ROW	CIRCUMFERENTIAL ROW	LOCATION
R3-1	3	1	Fin Base
R3-2	17	9	Shell
R3-3	31	@ 225°	Fin Base

2. Six chromel-alumel thermocouples. One each of the following locations: (External)

T/C NO.	AXIAL LEG ROW	CIRCUMFERENTIAL ROW	LOCATION
TC3-5	31	1	Fin Base
TC3-1	3	9	Shell
TC3-2	3	@ 225°	Fin Base
TC3-6	31	9	Shell
TC3-4	17	@ 225°	Fin Base
TC3-3	18	1	Fin Base

3. Three chromel-alumel thermocouples on the aft hermetic seal as shown in Figure 4-5.

4.3.2 FINAL ASSEMBLY AND CHECKOUT OF THERMOCOUPLES

When all the thermocouples are in place, the EFCS shall be inserted into the GA Hot Frame and the hot frame thermocouple lead extensions carefully positioned. After final assembly is complete, all thermocouple (external and internal) and voltage probes shall be checked for proper operation before starting the tests. This shall be accomplished by checking for shorted, grounded and open circuits.

The Quality Control and Test Engineer in charge of the test operation shall verify that all thermocouple locations and identifications are in agreement with drawings, figures and tables.

> **CAUTION**
>
> NEVER ENERGIZE THE HEATER IF THE GENERATOR IS CIRCUIT OPEN.

a. Voltage - The generators two circuits will be paralleled at the output terminals. All generator open and closed circuit voltages will be measured at the point of parallel.

In addition to generator voltages, the open and closed circuit voltage of (10) "P" legs, and in between individual legs, will be monitored. These voltage measurements will be made between the iron wires of the temperature sensing thermocouples described in paragraph 4.3.1.a and b.

> **CAUTION**
>
> DO NOT LEAVE THE GENERATOR CIRCUIT OPEN FOR MORE THAN 4 TO 8 SECONDS DURING THESE CHECKS.

b. Pressure - Each generator will incorporate a Data Sensors Inc. Model PB 531 A bonded strain gage pressure transducer which will continually measure the internal pressure and detect sizable leaks.

4.3.3 INSTRUMENTATION ACCURACIES

The following indicates the relative accuracies for the generator assembly instrumentation and related test equipment.

1) Thermocouples

TYPE T/C	RANGE	ACCURACY
Copper-Const.	-300°F to -75°F	±1%
	-75°F to 200°F	±3/4°F
	200°F to 700°F	±3/8%
Chromel-Alumel	0°F to 530°F	±2°F
	530°F to 2300°F	±3/8%
Iron-Const.	0°F to 530°F	±4°F
	530°F to 1400°F	±3/4%

2) Related Test Equipment

TYPE ANALOG	RANGE	ACCURACY
Copper-Const.	$0^{o}F$ to $600^{o}F$	$\pm 5^{o}F$ ($450^{o}F$ to $575^{o}F$)
Chromel-Alumel	$0^{o}F$ to $600^{o}F$	$\pm 5^{o}F$ ($450^{o}F$ to $575^{o}F$)
	$600^{o}F$ to $1200^{o}F$	$\pm 5^{o}F$ ($1000^{o}F$ to $1200^{o}F$)
Iron-Const.	$0^{o}F$ to $600^{o}F$	$\pm 5^{o}F$ ($450^{o}F$ to $575^{o}F$)
	$600^{o}F$ to $1200^{o}F$	$\pm 5^{o}F$ ($1000^{o}F$ to $1200^{o}F$)

3) R.T.D. - $\pm 1^{o}F$ ($450^{o}F$ to $575^{o}F$)
$\pm 1^{o}F$ ($1050^{o}F$ to $1200^{o}F$)

4) R.T.D. Related Test Equipment - Temperature knowledge accuracy of:

$\pm 5^{o}F$ ($400^{o}F$ to $575^{o}F$)
$\pm 5^{o}F$ ($1000^{o}F$ to $1200^{o}F$)

5)	Accelerometers	±5% of measured value
6)	Pressure Indicator	±3% of the full scale
7)	Wattmeter Transducer	± 1% of full scale
8)	Wattmeter	± 1% of full scale
9)	Ammeter	± 1% of full scale
10)	Voltmeter	± 1/2% of full scale
11)	Digital Voltmeter	± 1/4% of measured value
12)	Elapsed Time Indicator	± 2%

4.4 PRE-ACCEPTANCE BUY-OFF

Pre-acceptance tests including in-process checks and analyses will be required by the 3M Company before the GA will be received at VF/STC. They shall include the following operations.

a. Component Inspection, Cleaning, and Certifications - During pre-test operations, the GA components shall be inspected, cleaned, and certified according to SNAP-27 specifications. All certified materials will be stored in Bonded Stock.

b. Gas Analysis - Mass-spectrographic analysis of the argon backfill gas will be conducted to provide a standard for post-test comparisons. Each tank of gas will be analyzed by Quality Control.

c. Thermoelectric Test Specimens - The following pre-test operations will be performed on the thermoelectric test specimens:

1) Measure Seebeck voltages on several thermoelectric leg samples

2) Measure resistance versus length for each thermoelectric leg

3) Review Quality Control records on the cold-electrode bond for each thermoelectric leg

4) Perform an emission spectrographic analysis of one sample from each batch of thermoelectric legs

5) Perform a microprobe analysis of one sample from each batch of thermoelectric legs

d. Color Photographs - Color photographs shall be taken on the GA components before and during assembly. what are these for?

e. Electrical Resistance Test - An electrical resistance test shall be performed on each GA before its electrical heater is energized.

f. Component Analysis - The pre-test analysis list for the GA components is shown below. All certification and analysis shall be under the jurisdiction of Quality Control. After analysis, all materials will be stored in Bonded Stock until needed.

COMPONENT	ANALYSIS	
Thermoelectric legs	Measure resistivity	(each leg)
	Measure Seebeck	(samples)
	Emission spectrograph	(samples)
Metallic parts (except beryllium)	Chemical	

COMPONENT	ANALYSIS
Boron nitride	Chemical
Beryllium	None
MIN-K 1301	Emission spectrograph X-ray scattering, and wet chemical
Argon	Mass spectrograph

g. Performance Test - A 300 hour performance test and I-V mapping shall be performed on each generator assembly by 3M before shipment to GE. In addition, a final pressure measurement and resistance check shall be made just prior to packing after the test assembly has been dismantled. This data should accompany the GA to provide a comparative check for preliminary tests at GE.

SECTION 5.0

TEST OPERATIONS

5.1 VISUAL EXAMINATION OF THE GA - AS RECEIVED CONDITION FROM 3M

STEP 1. - Receiving inspection will receive the equipment from 3M. All handling, inspection, instrumentation, etc. will be performed with the GA mounted on its handling base plate. Special care must be taken to preclude any rough handling which could result in damage.

STEP 2. - Each GA will be delivered to the ANSO Lab and visually inspected for any handling or shipping damage. All parts and accessories must be constructed and finished in accordance to specification NS6115-30-01-C and GE-MSD 47R300128G2.

STEP 3. - Particular attention shall be paid to neatness and thoroughness of soldering, wiring and coatings. The GA should also be free of all burrs and sharp edges.

STEP 4. - The console and related instrumentation provided by 3M will be logged into the instrument pool for calibration and identification prior to its use.

STEP 5. - All indications of damage and nonconformance to the specifications shall be recorded in a log book.

5.2 RESISTANCE AND CONTINUITY TEST

STEP 1. - Measure the pressure transducer reading.

STEP 2. - Measure the continuity and total GA dc resistance at the power header "P", across pins #1 and 3 or pins #2 and 4, using a Keithly Milliohmmeter (or equivalent). Note: If the GA is left in an unheated state the values should stay to within ±10%. Always check the resistance when the GA is at ambient temperature, otherwise the values will vary and cause inaccurate comparisons.

STEP 3. - Weigh the GA without the handling base plate.

STEP 4. - Record the data and compare it with the corresponding data furnished from the 3M Company.

5.3 I-V MAPPING IN AIR

All acceptance testing for IV mapping in air shall be accomplished using 3M supplied equipment and a type-A EFCS.

STEP 1. - The GA in its "as received condition" should produce a similar mapping, comparable to the data furnished by the 3M Company. The hot and cold electrode thermocouples located at axial leg row 17, circumferential row 17, will be used to drive a safety device which cuts off the power if an over temperature reading is reached.

A hot electrode thermocouple located at axial leg row 17, circumferential row 9, will be used to drive a power-temperature controller.

While a resistance load of 4.7 ±10% ohms is applied across the output terminals at their point of parallel, the GA will be heated to an average hot electrode temperature of 1085 ±10°F, and if possible an average cold electrode temperature of 525 ±10°F.

These averages will be determined by using the ten (10) hot and cold thermocouples listed in Section 4, Paragraphs 4.3.1, a and b. The GA shall be placed into the 3M environmental chamber and the EFCS will be inserted into the GA.

STEP 2. - Energize the GA to operational temperature by using the following procedure:

1) With the generator in a cold (unheated) condition, apply a resistance load of 4.7 ±10% ohms across the two circuit parallel points.

2) Apply Power to the electric fuel capsule simulator (EFCS).

3) Continually adjust the hot side power control to achieve an average hot electrode temperature of 1085 ±10°F, and if possible an average cold electrode temperature of 525 ±10°F. Record data, as designated by the Test Conductor, in the Test Data Book.

4) Stabilize the generator at average hot and cold electrode temperatures of 1085 ±10°F and 525 ±10°F. Caution: Do not allow the hot and cold electrode temperatures to exceed 1130°F and 615°F respectively.

STEP 3. - The generator shall be stabilized at the above thermal and electrical conditions for 24 hours. During this time the input power necessary to achieve and maintain the desired electrode temperatures shall be measured and recorded.

STEP 4. - With the input power determined above held constant, a current-voltage map will be made by varying the external resistance load. The mapping will be done using the following loading points and sequence indicated below.

> *CAUTION
>
> MONITOR TEMPERATURE READINGS DURING THESE CHECK POINTS. DO NOT EXCEED T_H OF 1130°F.

POINT	LOAD CONDITION
1	4.7 ohm
2	Matched Load Current (MLC)
3	1.25 MLC
4	1.50 MLC (if possible)
5	Minimum Load
6*	0.65 MLC*
7*	0.50 MLC (if possible)

The generator will be allowed to attain steady state conditions for each map point and held for a total of 4 hours.

As the load is shifted from matched load current (see note below) to open circuit conditions, the last map point will be determined by the load condition that produces a maximum hot electrode temperature of 1130°F.

> CAUTION
>
> DO NOT LEAVE THE GENERATOR CIRCUIT OPEN FOR MORE THAN 4-8 SECONDS.

NOTE: To establish the matched load current, break the output load circuit and measure the open circuit voltage with a digital voltmeter.

Close the output load circuit and set the closed circuit voltage to 50% of the above measured open circuit readings, by varying the load resistance. After resetting the load, stabilize temperatures and attain steady state conditions.

Repeat the above procedure until the closed circuit voltage is exactly 50%+1%-0% of the final open circuit voltage. This will result in the matched load current to use for the I-V mapping (see Figure 5-1).

STEP 5. - Record all data on Test Time Record Sheet, I-V Mapping Summary Sheet (Figures 5-2 and 5-3) and GA Test Data Book for comparison with the results furnished from 3M Company's mapping.

STEP 6. - At the completion of the test, the GA shall be visually examined for indication of any possible damage.

STEP 7. - When the GA has cooled to ambient room temperature, measure and record the resistance and pressure transducer reading.

5.4 LEAK RATE TEST IN VACUUM (GA NON-OPERATING)

STEP 1. - Place the GA in the bell jar.

STEP 2. - Evacuate the chamber to a pressure of 1×10^{-6} torr or less.

STEP 3. - Calibrate the sensitivity of the LC-20 mass spectrometer using a calibrated leak rate sample.

Sensitivity is determined by dividing the total output reading into the known calibrated leak rate resulting in that output.

$$S = \frac{L}{M}$$

where:

S = Sensitivity in Std. CC/Sec.

L = Calibrated leak rate (Std. CC/Sec. of helium)

M = Total divisions of output.

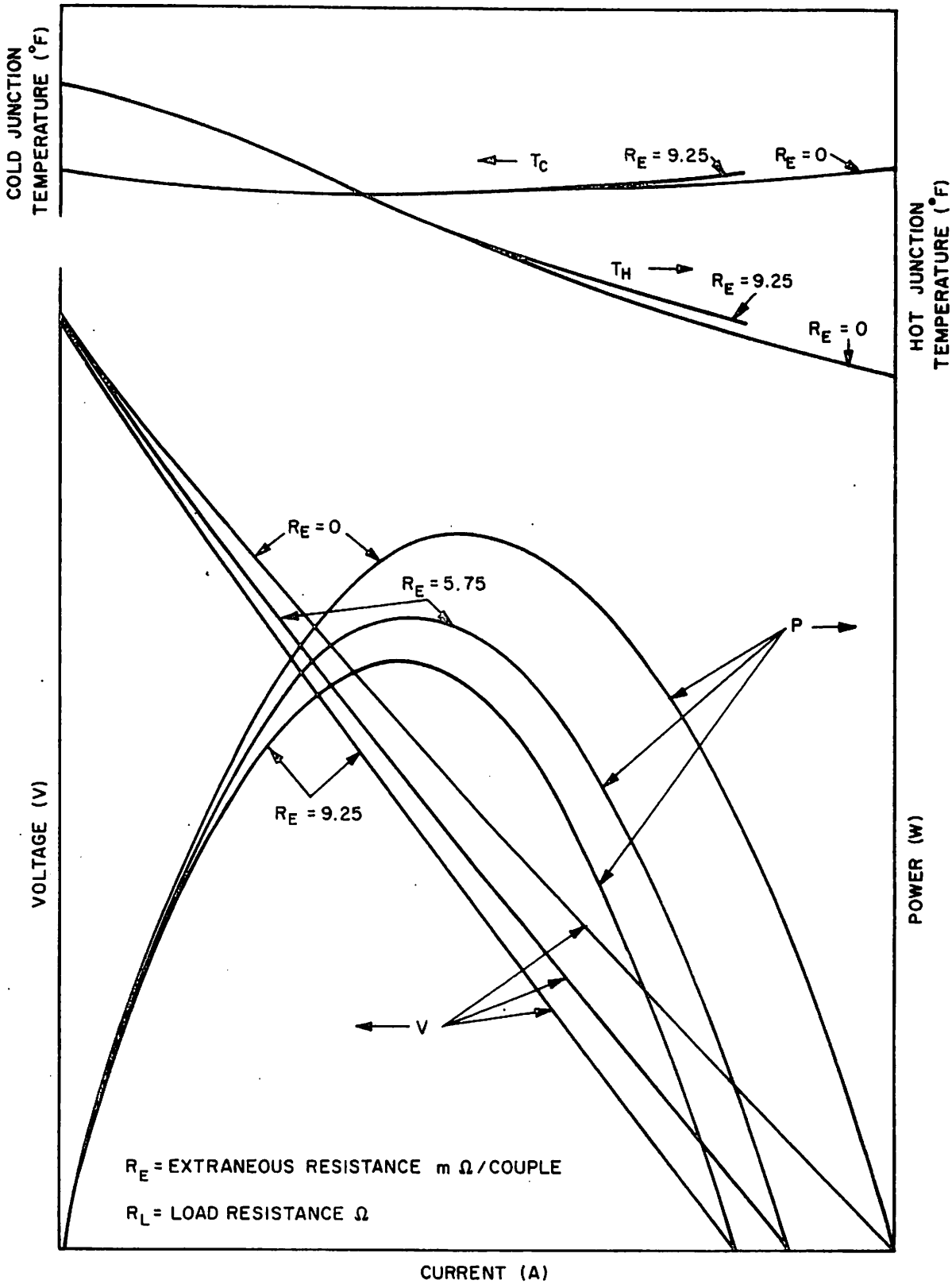

Figure 5-1. Typical I-V Mapping

GENERATOR I-V MAPPING SUMMARY SHEET

GENERATOR ASSEMBLY NO._____ AVERAGE SINK TEMPERATURE _____ °F

START DATE _____ TIME _____ AVERAGE CHAMBER PRESSURE_____

TECHNICIAN_____ EFCS POWER INPUT_____ WATTS_____

ENGINEER _____

MAP POINT	T_C (°F)	T_H (°F)	E_x (VOLTS)	E_L (VOLTS)	I_L (AMPS)	$R_L = E_L/I_L$ (OHMS)	POWER OUT ($E_L \times I_L$) (WATTS)	POWER IN (EFCS) (WATTS)	INT. RES. ($E_x - E_L$) (OHMS)	ELAPSED TIME (HOURS)
4.7 Ω	___	___	_____	_____	_____	_____	_____	_____	_____	_____
MLC	___	___	_____	_____	_____	_____	_____	_____	_____	_____
1.25 MLC	___	___	_____	_____	_____	_____	_____	_____	_____	_____
1.50 MLC	___	___	_____	_____	_____	_____	_____	_____	_____	_____
MINIMUM LOAD	___	___	_____	_____	_____	_____	_____	_____	_____	_____
0.75 MLC	___	___	_____	_____	_____	_____	_____	_____	_____	_____
0.50 MLC	___	___	_____	_____	_____	_____	_____	_____	_____	_____

NOTE: ELAPSED TIME IS DEFINED AS: THE BEGINNING OF- TO THE END OF STEADY STATE CONDITIONS. ALL OF THE ABOVE VALUES SHALL BE AVERAGED OVER THE ELAPSED TIME PERIOD.

Figure 5-2.

: - MOD GA I-V MAPPING (USING 3M EQUIPMENT) (SHEET 1 OF 2)

Figure 5-3. Sample Acceptance Data Sheet (Sheet 1 of 2)

T - MOD GA I-V MAPPING (USING 3M EQUIPMENT) (SHEET 2 OF 2)

Figure 5-3. Sample Acceptance Data Sheet (Sheet 2 of 2)

STEP 4. - Connect the mass spectrometer to the bell jar. Valve off the bell jar pumping system and valve in the mass spectrometers pumping system to evacuate the total volume of the bell jar through the leak detector.

STEP 5. - Record the stabilized output meter response on the leak detector.

STEP 6. - Determine the leak rate of the generator assembly as follows.

$$L_x = SxMx \ x \ \frac{1}{\text{He Concentration in Generator}}$$

where:

L_x = Generator leak rate

S = Sensitivity in CC/Sec. (Step 3)

M_x = Total output reading (Step 5) - Background Reading

The ratio $\frac{1}{\text{He Concentration}}$ corrects for the gas consumption in the test article.

STEP 7. - Measure, record and compare the resistance and pressure transducer readings.

STEP 8. - At the completion of the test, the GA shall be visually examined for indication of any possible damage.

5.5 GA CABLE ASSEMBLY AND T/C INSTALLATION

Install the GA cable assemblies per Drawing 47C300454 and thermocouples as required by G.E. Drawings 47R300334 and 47R300195.

5.6 RESISTANCE AND CONTINUITY TEST

Repeat the pressure resistance and continuity check as specified in Paragraph 5.2.

5.7 OPERABILITY ASSURANCE (OA) VIBRATION TEST (ACCEPTANCE LEVEL)

STEP 1. - Mount the vibration fixture onto the C-125 shaker table, and assemble the GA and handling base plate onto the fixture. Mount two tri-axial control accelerometers at the foot of the GA, in the Y and Z axes.

STEP 2. - Subject the GA to a sinusoidal test by vibrating along each of the three major orthogonal axes (Figure 5-4) for five minutes, through a frequency range from 5 to 2000 cps. The following frequency range shall be swept at a constant octave sweep rate.

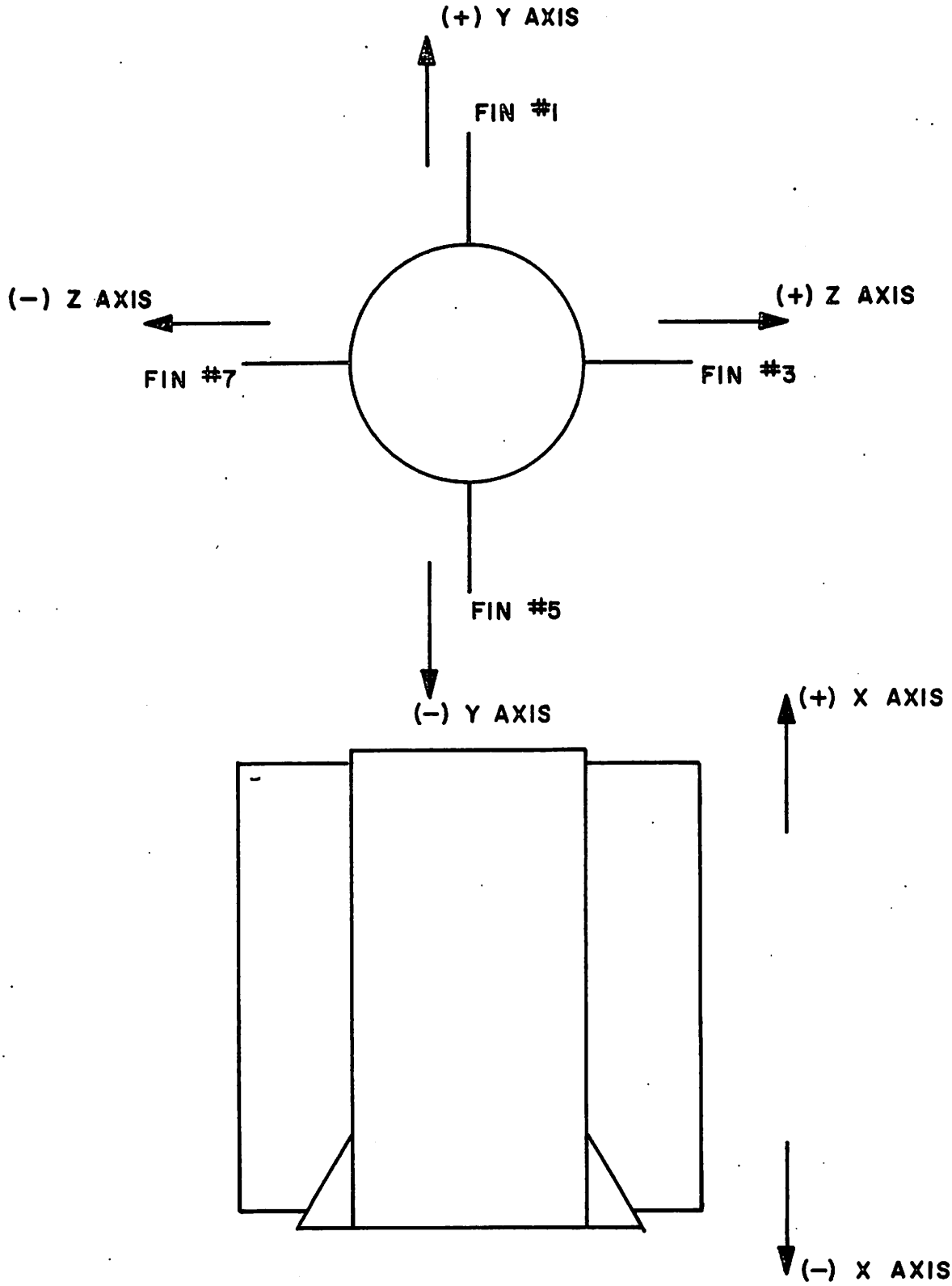

Figure 5-4. Definition of the Three Major Orthogonal Axes to be Used in Testing the GA

FREQUENCY, CPS	VIBRATION LEVEL
5 to 18 cps	0.15-inch double amplitude
18 to 320 cps	±2.7G
320 to 2000 cps	±4.5G

STEP 3. - Record and compare the resistance and pressure transducer readings with those of the last test.

STEP 4. - At the completion of the test, the GA will be visually examined for indication of possible damage.

5.8 I-V MAPPING IN AIR

Repeat the I-V mapping in air test as specified in Paragraph 5.4. Use loading conditions of points 1 and 5 only.

5.9 I-V MAPPING (VACUUM 170° SINK) AND LEAK RATE TEST

NOTE: Take a mass spectrometer reading of the empty test chamber prior to inserting the GA.

STEP 1. - Place the GA (mounted on the support plate) in the space simulator and orient it as shown in Figure 5-5. Use a type "B" EFCS.

STEP 2. - Evacuate the chamber to a pressure of 1×10^{-6} torr or less.

STEP 3. - The "Data Management System" shall be programmed to scan all channels at a rate of one complete scan every ten minutes, or less, if so directed by the test conductor.

STEP 4. - Establish and maintain a thermal shroud temperature of $+170^{\circ} \pm 5^{\circ}$F.

STEP 5. - Ensure the GA is under a load condition of 4.7 ohms. Energize the EFCS and set the power controls for 1500 ±15 watts.

CAUTION
MONITOR PRESSURE TRANSDUCER CONTINUOUSLY DURING HEAT-UP

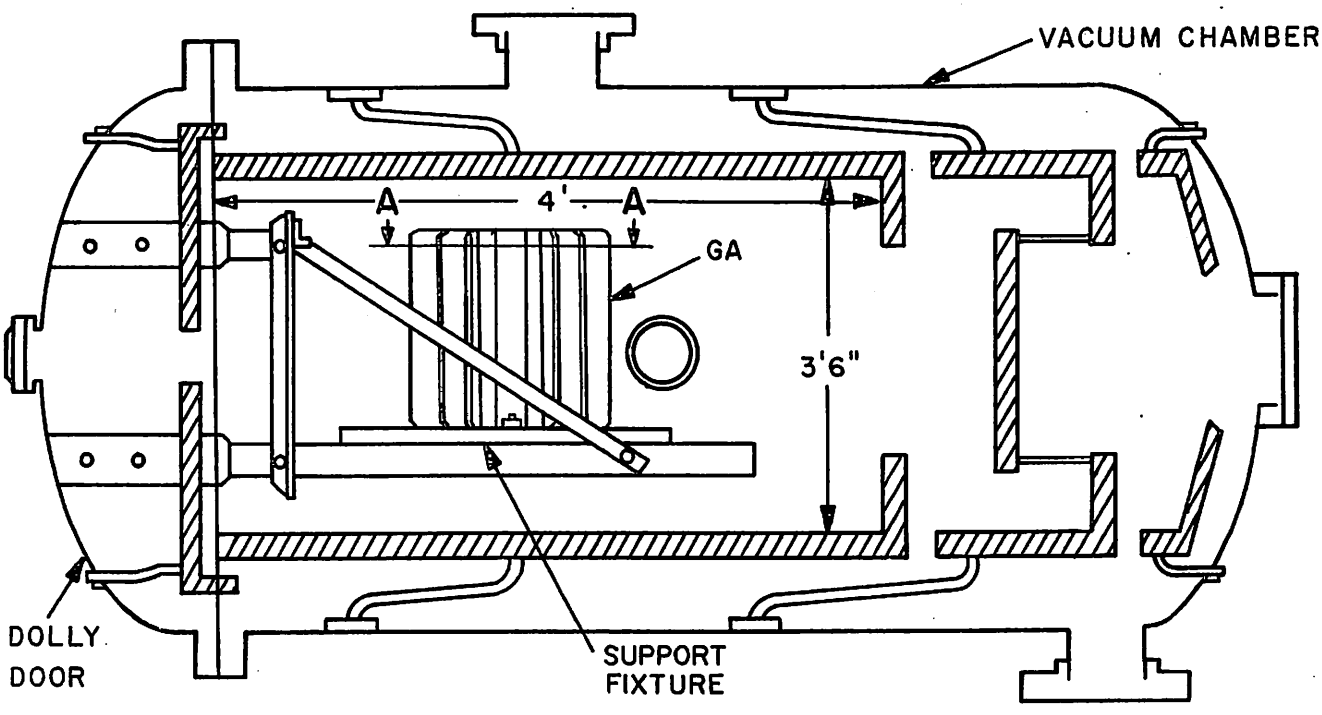

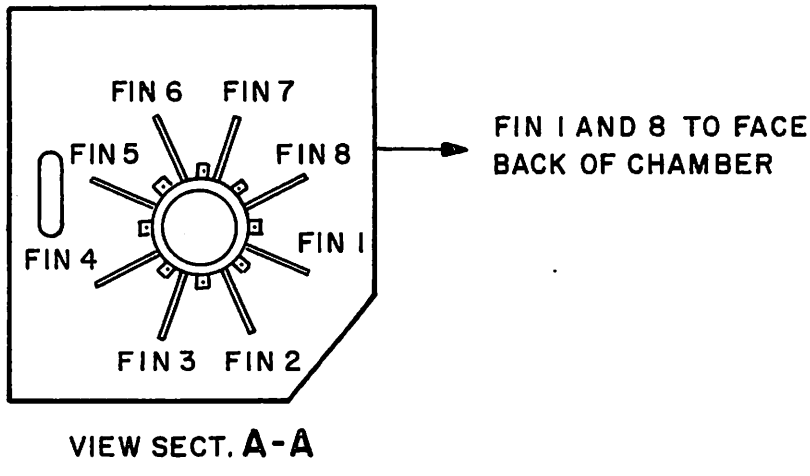

Figure 5-5. Orientation of GA in Space Simulator

Do not exceed A T_H of 1085 ±10°F. Allow the GA to stabilize at this load and attain steady state conditions. Steady state is defined as the point at which the hot junction, cold junction, hot frame and outer case average temperature do not deviate more than ±1°F for a total of twenty data points. Data points will be recorded at intervals of 3 to 5 minutes by the data acquisition system. The data shall be plotted on a time versus temperature basis to indicate trends. GA output power, voltage, current and temperatures shall be recorded in the Test Book as designated by the Test Conductor. Repeat this procedure for points 2 through 7.

*CAUTION

MONITOR TEMPERATURE READINGS DURING THESE CHECK POINTS. DO NOT EXCEED T_H OF 1130°F.

POINT	LOAD CONDITION
1	4.7 ohms
2	Matched Load Current (MLC)
3	1.25 of MLC
4	1.50 MLC (if possible)
5	Minimum Load
6*	0.65 MLC*
7*	0.50 MLC* (if possible)

STEP 6. - Apply a load resistance of 4.7 ohms, and valve a helium sensitive mass spectrometer leak detector into the chamber.

STEP 7. - Record the stabilized output meter response on the leak detector.

STEP 8. - Introduce a calibrated leak into the chamber and record the stabilized leak detector output meter response.

STEP 9. - Isolate the calibrated leak from the chamber.

STEP 10. - Determine the leak rate of the generator assembly as follows:

$$A = \frac{B \times C}{D} \times \frac{1}{H_E \text{ CONCENTRATION IN GENERATOR}}$$

where:

A = Generator leak rate

B = Calibrated leak rate (STD CC/SEC of Helium)

C = Leak detector response for Generator (Response Step 7.)

D = Leak detector response for calibrated leak (Step 8 minus Step 7.)

The ratio $\frac{1}{H_E \text{ CONCENTRATION}}$ corrects for the gas consumption in the test article.

STEP 11. - Note and record the output performance of the GA, and the resistance and pressure transducer readings.

5.10 THERMAL-VACUUM TEST

STEP 1. - While the GA is still setup and operating in the environment of the space simulator, start the lunar day-lunar night cycles.

STEP 2. - Maintain the +170°F temperature for 48 hours.

STEP 3. - At the end of this period, reduce the shroud temperature to -280°F.

STEP 4. - Maintain the -280°F temperature for 48 hours.

STEP 5. - At the end of this period, raise the shroud temperature to +170°F.

STEP 6. - This shall constitute one cycle. This cycle will be repeated continuously for the next 350 hours.

5.11 I-V MAPPING (VACUUM 170° SINK) AND LEAK RATE TEST

STEP 1. - While the GA is still setup and operating in the cycle range of the +170°F temperature, a current-voltage map will be generated.

STEP 2. - Repeat the procedure described in Paragraph 5.9 for mapping the generator and performing the leak rate test.

5.12 THERMAL-VACUUM TEST

Repeat the procedure described in Paragraph 5.10.

5.13 I-V MAPPING (VACUUM 170° SINK) AND LEAK RATE TEST

STEP 1. - Repeat the procedure described in Paragraph 5.9. Use loading conditions of points one and five only.

STEP 2. - At the completion of the test, the GA will be visually inspected for indication of possible damage.

5.14 I-V MAPPING (VACUUM 170° SINK) WITH FUELED CAPSULE

STEP 1. - The exact procedure for this nuclear test will be supplied later.

STEP 2. - Replace the EFCS with a fueled capsule to take the map point readings.

All nuclear safety precautions noted in Appendix C shall be strictly adhered to. Do not perform the leak rate test.

5.15 HIGH TEMPERATURE TEST

STEP 1. - Remove the fuel capsule and replace it with a Type "B" EFCS. Let the GA reach ambient temperatures.

STEP 2. - Place the mounted GA inside of the space simulator and orient as shown in Figure 5.4.

STEP 3. - Establish and maintain a thermal shroud temperature of 160° ±4°F for a period of not less than 48 hours. The relative humidity shall not exceed 15% during this time.

STEP 4. - Adjust the temperature to the highest operating temperature the GA will see, which is +170°F.

STEP 5. - Maintain this temperature until temperature stabilization of the GA is reached. The EFCS shall then be energized to previous power input but not to exceed a T_H temperature of 1130°F.

5.16 I-V MAPPING (VACUUM 170° SINK) AND LEAK RATE TEST

STEP 1. - While the GA is still setup and operating in the space simulator, reduce the chamber pressure to 10^{-6} torr or less.

STEP 2. - Repeat the procedure described in Test 5.9 for mapping the generator and checking the leak rate. Use loading conditions of points one and five only.

5.17 LOW TEMPERATURE TEST

STEP 1. - Deenergize the EFCS, bring pressure back to normal and allow the mounted GA inside of the space simulator to reach ambient temperatures.

STEP 2. - Establish and maintain a thermal shroud temperature of $-80^{o}F$ for a period of not less than 48 hours.

STEP 3. - Remove and inspect the GA for any indication of possible damage.

STEP 4. - Replace the GA back into the space simulator and establish a thermal shroud temperature for the lowest operating temperature the GA will see ($-280^{o}F$).

STEP 5. - Maintain this temperature until temperature stabilization of the GA is reached. The EFCS shall then be energized to previous power input but not to exceed a T_H temperature of $1130^{o}F$.

5.18 I-V MAPPING (VACUUM 170° SINK) AND LEAK RATE TEST

STEP 1. - While the GA is still setup and operating in the space simulator, reduce the chamber pressure to 10^{-6} torr or less.

STEP 2. - Repeat the procedure described in Test 5.9 for mapping the generator and checking the leak rate. Use loading conditions of points one and five only.

5.19 SINUSOIDAL VIBRATION TEST (QUALIFICATION LEVEL)

STEP 1. - Mount the vibration fixture onto the C-125 shaker table. Assemble the GA and the handling base plate to the fixture. Measure the pressure transducers output and record it. Conduct a low level sine, 0.5g to 1.0g, for purposes of setting amplifiers. Continually monitor the total resistance throughout the tests.

STEP 2. - The GA non-operating shall be subjected to X-axis sinusoidal vibration as follows:

FREQUENCY, CPS	AMPLITUDE
5-20	0.39-inch D.A.
20-35	±7.8g
35-100	±10.4g

The frequency range shall be swept at a rate of three octaves per minute, increasing frequency only.

STEP 3. - Visually inspect the GA and measure the total circuit resistance and the resistance to ground at the generator power connector. Record values and any defects. Measure and record the pressure transducer reading.

STEP 4. - Repeat steps 2 and 3 for the Y-axis vibration test.

STEP 5. - Repeat steps 2 and 3 for the Z-axis vibration test.

STEP 6. - At the completion of the test, the GA will be visually examined for indication of possible damage.

5.20 RANDOM VIBRATION TEST (QUALIFICATION LEVEL)

STEP 1. - Mount the GA onto the vibration fixture and then onto the C-125 shaker table. Continually monitor the total resistance throughout the tests.

STEP 2. - The GA non-operative shall be subjected for five minutes to an X-axis random vibration as follows:

FREQUENCY, CPS	VIBRATION LEVEL
23-80	0.224 g^2/cps
80-103	12 db/octave decrease
103-950	0.075 g^2/cps
950-1400	12 db/octave decrease
1400-2000	0.0148 g^2/cps

STEP 3. - Visually inspect the GA, and measure the total circuit resistance and the resistance to ground at the generators power connector. Record these values and any defects. Measure the pressure transducer output and record it. Note: Any deviation in the pressure transducer reading greater than ±10% or change in circuit resistance greater than ±10% shall be cause for immediate suspension of all dynamic testing. Testing shall not be resumed until the cause for the deviation is ascertained.

STEP 4. - Repeat steps 2 and 3 for the Y-axis vibration test.

STEP 5. - Repeat steps 2 and 3 for the Z-axis vibration test.

STEP 6. - At the completion of the test, the GA will be visually examined for indication of possible damage.

5.21 I-V MAPPING (VACUUM 170° SINK) AND LEAK RATE TEST

Repeat test procedure described in Paragraph 5.9. Use loading conditions of points one and five only.

5.22 ACCELERATION TEST

STEP 1. - Mount the GA onto the centrifuge.

STEP 2. - An acceleration of 7.5g shall be attained, stabilized, and maintained for a period of not less than three minutes or more than four minutes, in the direction of the X-axis.

STEP 3. - Measure and record the GA resistance and pressure transducer output.

STEP 4. - Repeat steps 2 and 3 along the Y-axis.

STEP 5. - Repeat steps 2 and 3 along the Z-axis.

STEP 6. - At the completion of the test, the GA will be visually examined for indication of possible damage.

5.23 I-V MAPPING (VACUUM 170° SINK) AND LEAK RATE TEST

Repeat test procedure described in Paragraph 5.9. Use loading conditions of points one and five only.

5.24 ACOUSTIC NOISE TEST

STEP 1. - The GA shall be suspended in the center of the reverberent chamber by means of soft suspension cords such as soft springs or elastic cord. The natural frequency of the selected type of suspension shall be less than 25 cps.

STEP 2. - One or more microphones shall be used to make measurements both in the proximity of each major surface of the GA and at least 18 inches from these surfaces.

STEP 3. - Introduce an overall sound pressure level of 145 db into the chamber. The octave band spectrum shall be:

OCTAVE BAND	C. B. FREQUENCY	DB
9 - 18.8	13.5	131
18.8 - 37.5	27	137
37.5 - 75	53	141
75 - 150	106	138
150 - 300	212	134
300 - 600	425	130
600 - 1200	850	125
1200 - 2400	1700	120
2400 - 4800	3400	114
4800 - 9600	6800	108

The microphone(s) shall be moved over the GA surfaces and at least 18 inches from each surface, for a duration not to exceed twelve (12) minutes. During this time twelve (12) measurements shall be taken and averaged.

STEP 4. - Raise the overall sound pressure level to the required 150 ±3 db and hold for thirty (30) minutes. The octave band spectrum shall be as shown below.

OCTAVE BAND	C. B. FREQUENCY	DB
9 - 18.8	13.5	136
18.8 - 37.5	27	142
37.5 - 75	53	146
75 - 150	106	143
150 - 300	212	139
300 - 600	425	135
600 - 1200	850	130
1200 - 2400	1700	125
2400 - 4800	3400	119
4800 - 9600	6800	113

STEP 5. - At the completion of the test, measure the total circuit resistance and the resistance to ground at the generators power connector. Measure the pressure transducer output and visually inspect the GA for indication of possible damage.

5.25. I-V MAPPING (VACUUM 170° SINK) AND LEAK RATE TEST

Repeat test procedure described in Paragraph 5.9. Use loading conditions of points one and five only.

5.26 THERMAL-VACUUM OPERATING LIFE TEST

STEP 1. - While the GA is still setup and operating in the environment of the space simulator, an accelerated life test of 4400 hours will commence.

STEP 2. - The space simulator shall be maintained at a pressure of 10^{-6} Torr. The shroud temperature (sink) shall be maintained at a temperature of +170°F for a 14 day period.

STEP 3. - At the end of this period, the shroud temperature shall be reduced to -280°F and maintained for a 14 day period. This shall constitute one thermal cycle.

STEP 4. - Repeat this cycle continuously for the 4400 hours.

STEP 5. - During the continuous life test, a leak rate test will be performed as described in test procedure 5.9 at least once a week for the first 1000 hours, and during each I-V Mapping thereafter.

STEP 6. - I-V Mappings must be taken as described in test procedure 5.9 at the following intervals:

1) After 1000 hours of operation

2) After 3000 hours of operation

3) After 4400 hours of operation

STEP 7. - At completion of the 6 month life test, the GA will be visually inspected for indication of any possible damage.

5.27 COATING SAMPLES AND TEST

The two 49/64-inch samples of thermal coatings shall be analyzed for evaluation of the absorptance and emittance values. The absorptance shall be measured using a Beckman DK-IL Spectrophotometer (or equivalent) over a wave length region of 0.3 to 2.6 microns. The normal emittance shall be measured using a Perkin-Elmer Model 205 Spectrophotometer (or equivalent) over a wave length region of 2 to 25 microns.

The two four-inch by four-inch samples of thermal coatings shall be submitted for adhesion tests in accordance with Federal Test Method Standard 141, Method 6301, Adhesion Tape Test, except that the specimens shall not be immersed in water.

After the completion of all the tests the thermal coatings on all exterior surfaces of the GA shall be visually inspected for degradation. The emissivity value of the coating shall be determined by use of the "Lion Emissometer" (portable spectrometer).

MOD 8. SIMULATED MISSION TEST PLAN CHECK OFF SHEET

SEQ. NO.	TEST NO.	DATE	REQUIREMENTS	EQUIP. OR METHOD USED	ACTUAL MEASUREMENT	SIGN OFF STAMP
14.	5.14	S_____ F_____	I-V Mapping in Vacuum with Fueled Capsule		____Points	
15.	5.15	S_____ F_____	High Temperature Test			
16.	5.16	S_____ F_____	I-V Mapping in Vacuum Leak Rate Test in Vacuum Measure Pressure Transducer Measure Resistance and Continuity Total Elapsed Operating Time		____Points _____ _____ _____ _____	
17.	5.17	S_____ F_____	Low Temperature Test			
18.	5.18	S_____ F_____	I-V Mapping in Vacuum Leak Rate Test in Vacuum Measure Pressure Transducer Measure Resistance and Continuity Total Elapsed Operating Time		____Points _____ _____ _____ _____	
19.	5.19	S_____ F_____	Sinusoidal Vibration Test (Qual. Level) Measure Pressure Transducer Measure Resistance and Continuity	C-125 Exciter	_____ _____	
20.	5.20	S_____ F_____	Random Vibration Test (Qual. Level) Measure Pressure Transducer Measure Resistance and Continuity	C-125 Exciter	_____ _____	
21.	5.21	S_____ F_____	I-V Mapping in Vacuum Leak Rate Test in Vacuum Measure Pressure Transducer Measure Resistance and Continuity Total Elapsed Operating Time		____Points _____ _____ _____ _____	
22.	5.22	S_____ F_____	Acceleration Test Measure Pressure Transducer Measure Resistance and Continuity		_____ _____	
23.	5.23	S_____ F_____	I-V Mapping in Vacuum Leak Rate Test in Vacuum Measure Pressure Transducer Measure Resistance and Continuity Total Elapsed Operating Time		____Points _____ _____ _____ _____	
24.	5.24	S_____ F_____	Acoustic Noise Test Measure Pressure Transducer Measure Resistance and Continuity		_____ _____	
25.	5.25	S_____ F_____	I-V Mapping in Vacuum Leak Rate Test in Vacuum Measure Pressure Transducer Measure Resistance and Continuity Total Elapsed Operating Time		____Points _____ _____ _____ _____	

MOD 8. SIMULATED MISSION TEST PLAN CHECK OFF SHEET (Cont)

SEQ. NO.	TEST NO.	DATE	REQUIREMENTS	EQUIP. OR METHOD USED	ACTUAL MEASUREMENT	SIGN OFF STAMP
1.	5.1	S_____ F_____	Inspect for Damage and Non Conformance.	Visual		
2.	5.2	S_____ F_____	Measure Pressure Transducer Measure Resistance and Continuity Weight of the GA	Digitec Milliohmmeter Scale	_____ _____ _____	
3.	5.3	S_____ F_____	I-V Mapping in Air Measure Pressure Transducer Measure Resistance and Continuity Total Elapsed Operating Time	3M Console	____Points _____ _____ _____	
4.	5.4	S_____ F_____	Leak Rate Test in Vacuum with GA Non Operation Measure Pressure Transducer Measure Resistance and Continuity	Bell Jar	_____ _____ _____	
5.	5.5	S_____ F_____	Install GA Cabling as Per Drawing			
6.	5.6	S_____ F_____	Measure Pressure Transducer Measure Resistance and Continuity		_____ _____	
7.	5.7	S_____ F_____	OA Vibration Test (Acceptance Level) Measure Pressure Transducer Measure Resistance and Continuity	C-125 Exciter	_____ _____	
8.	5.8	S_____ F_____	I-V Mapping in Air Measure Pressure Transducer Measure Resistance and Continuity Total Elapsed Operating Time		____Points _____ _____ _____	
9.	5.9	S_____ F_____	I-V Mapping in Vacuum Leak Rate Test in Vacuum Measure Pressure Transducer Measure Resistance and Continuity Total Elapsed Operating Time		____Points _____ _____ _____ _____	
10.	5.10	S_____ F_____	Thermal Vacuum Test (350 Hours) Total Elapsed Operating Time		_____	
11.	5.11	S_____ F_____	I-V Mapping in Vacuum Leak Rate Test in Vacuum Measure Pressure Transducer Measure Resistance and Continuity Total Elapsed Operating Time		____Points _____ _____ _____ _____	
12.	5.12	S_____ F_____	Thermal Vacuum Test (350 Hours) Total Elapsed Operating Time		_____	
13.	5.13	S_____ F_____	I-V Mapping in Vacuum Leak Rate Test in Vacuum Measure Pressure Transducer Measure Resistance and Continuity Total Elapsed Operating Time		____Points _____ _____ _____ _____	

MOD 8. SIMULATED MISSION TEST PLAN CHECK OFF SHEET (Cont)

SEQ. NO.	TEST NO.	DATE	REQUIREMENTS	EQUIP. OR METHOD USED	ACTUAL MEASUREMENT	SIGN OFF STAMP
26.	5.26	S_____ F_____	Thermal Vacuum Operating Life Test 1000 Hour Mapping 3000 Hour Mapping 4000 Hour Mapping		_____ _____ _____	
			Total Accumulative Operating Hours on GA		_____	
27.	5.27	S_____ F_____	Coating Samples and Test			

SECTION 6

POST-TEST OPERATIONS

failure analysis, etc.

(To be Supplied Later)

APPENDIX A

OPERATING INSTRUCTIONS FOR THE GROUND SUPPORT EQUIPMENT

APPENDIX A

OPERATING INSTRUCTIONS FOR THE GROUND SUPPORT EQUIPMENT

SECTION 1.0

INTRODUCTION

The operating instructions which follow are written for normal operation of an Engineering Test Monitor Console (ETMC) after system test acceptance checkout and calibration have been completed. The following procedures are for general console operation and are not to be used as specific test instructions or to replace Quality Control Standing Instructions (S.I.'s). During operation and maintenance of an ETMC (shown on the following page), care must be taken to prevent damaging the Weston Wattmeter located on the EFCS Control Panel. There is a "lock" located to the right of this meter which must be engaged (pushed in) whenever the console is not in use. Equally important, the lock must be disengaged (pulled out) prior to energizing the main power circuit breaker on the console. The console should never be moved with power on and without the lock engaged.

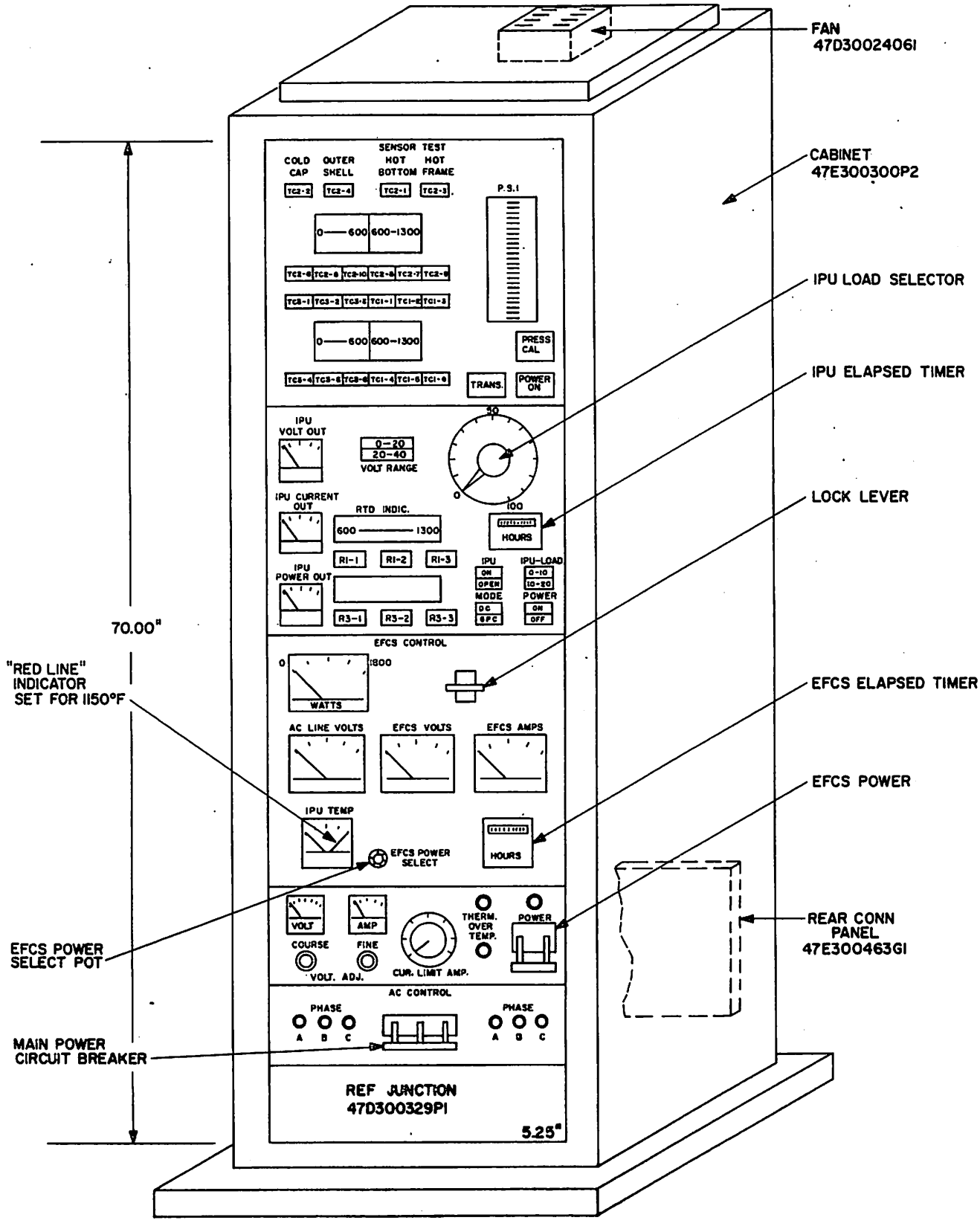

Engineering Test Monitor Console.

SECTION 2.0

GENERAL OPERATION

FOR ENGINEERING TEST MONITOR CONSOLE

2.1 POWER TURN ON

Before connecting the ac power connector to 3Ø 115vac 60 cycles, connect all other cables and de-energize the main power circuit breaker located on the ac power control panel.

Connect the power connector and check that the three red indicator lights located on the left hand side of the ac power control panel, are energized.

Turn the power select pot on the EFCS control panel full counter clockwise. (Zero output)

Check that the "red line" indicator on the Over Temperature Meter, located on the EFCS control panel, is set at 1150°F.

Pull out the "lock" lever on the Weston Wattmeter and level the meter with the level adjustments if required.

Energize the main power circuit breaker on the ac power control panel. The console blower should now be operating. The extreme right amber indicator should be energized on the ac power control panel. Various indicator lights and meter lights will now be on depending upon the condition of the console when last operated prior to de-energizing the main power breaker.

2.2 CONSOLE OPERATING INSTRUCTIONS

After energizing main power as directed in Paragraph 2.1 check the console and energize the appropriate switches if necessary to obtain the following indicator illumination:

a. EFCS ac power off
b. EFCS power off
c. Performance map panel power on
d. DC mode/GPC mode in dc mode
e. IPU load on/open circuit in On position (Read Paragraph 2.6 before continuing)
f. Sensor test panel power on

g. 0 to 20 volts/20 to 40 volts indicator in 0 to 20 volts

h. 0 to 10 ohms/10 to 20 ohms indicator in 0 to 10 position.

Check and be sure that the EFCS power select pot is full counter-clockwise.

NOTE: A 30 minute warmup period is required for accurate operation of the console. The Weston Model 1483 Wattmeter and the Thermocouple Reference Junction unit will not operate to design accuracy levels with less than the 30 minute warmup period.

Check the "red line" marker on the Over Temperature Meter located in the EFCS control panel. It should be set at 1150°F.

Take the readings on the IPU Elapsed Timer and on the EFCS Timer and record them in the test logbook. Reset the meters, if desired, only after both readings have been recorded.

Energize EFCS ac power on. The corresponding indicator should light.

Energize EFCS power on. The corresponding indicator should light and also the two remaining amber indicators on the ac power control panel. The ac line voltmeter on the EFCS control panel should now read 208 volts. If EFCS power does not turn on, repeat turn on procedure as an interlock will not allow power turn on unless previous directions are followed exactly.

Energize RTD select buttons R1-2 and R3-2. Set the IPU load select pot at full clockwise position to the mechanical stop (stop will be located somewhere between 4 to 6 ohms).

Increase the EFCS power select pot slowly clockwise to the desired power level as read on the Weston Model 1483 Wattmeter (0 to 1800 watts).

The increase in temperature at the EFCS should be visible after a short time on the R3-2 RTD Meter. The Over Temperature Meter on the EFCS control panel should also indicate an increasing temperature. Correlation between the R1-2 RTD Meter and the Over Temperature Meter should exist between 600° and 1300° temperatures.

Generator output may be observed on the Performance Map panel. Do not change switch settings or IPU load resistance unless specifically directed to do so by the Cognizant Test Director or Test Conductor.

Specific thermocouple readings may be monitored by activating the desired thermocouple select switch. Up to four thermocouples, one from each meter group, may be monitored simultaneously. Generator pressure should indicate as soon as sensor panel switch is energized.

2.3 AUTOMATIC OVER TEMPERATURE SHUTDOWN

If the "black line" over temperature reading reaches the "red line" temperature setting, an over temperature condition will result and the over temperature indicator on the EFCS control panel will light. Approximately ten seconds after an over temperature condition occurs, should the temperature remain at or over the "red line" setting, EFCS power will automatically shut off. The over temperature indicator will remain energized and EFCS power will remain off until the "black line" temperature readout falls below the "red line" level. At this time, if the console has gone unattended and the EFCS power select pot has not been reduced, the over temperature indicator will go out and EFCS power will again be applied at the original level. The system will continue to cycle automatically, if the over temperature problem continues, to prevent exceeding the selected "red line" temperature level. The Over Temperature Meter and associated circuitry will operate with or without RTD monitoring selected at the Performance Map Panel.

2.4 TURN OFF PROCEDURE

Reduce the EFCS power select pot to zero (Full counter-clockwise). Turn EFCS power off then EFCS ac power off.

Turn sensor panel power off and Performance Map Panel power off.

De-energize the main power circuit breaker on the ac power control panel.

Disconnect the ac power cable from the ac power outlet to prevent accidental turn on of GSE equipment.

Engage the "lock" located on the EFCS control panel for the Weston Model 1483 Wattmeter.

2.5 GPC MODE PANEL

The Generator Protective Circuit (GPC), or the Power Conditioning Unit (PCU) as sometimes referred to, may or may not connect to the IPU generator output as controlled by the dc mode/ GPC mode switch on the Performance Map Panel. Information on this unit is presently not available but will be released later. The GPC mode switch should not be actuated without a GPC unit mounted in the ETMC, connected and tested.

> **CAUTION**
>
> DAMAGE TO THE IPU GENERATOR MAY RESULT BY SWITCHING INTO GPC MODE WITHOUT A GPC UNIT OPERATING IN THE ETMC. SWITCHING INTO GPC MODE WITHOUT THE GPC UNIT WILL OPEN CIRCUIT THE GENERATOR OUTPUT.

2.6 IPU LOAD ON/OPEN CIRCUIT SWITCH

This switch, located on the Performance Map Panel, should remain in the load on condition unless the Cognizant Test Conductor directs actuation of the switch to open circuit mode. Open circuit mode (no load on the generator output) cannot be attained by just actuating the switch. In addition to this a "short" (contact closure) is required from the Data Acquisition system across prior to pins p and r on ETMC rear panel connector J3. An open circuit condition exists only if the red light indicator on the switch lights when the switch is actuated. If the red indicator does not light with actuation of the switch, this indicates that prior to pins p and r (connector J3) have not been shorted by the Data Acquisition system and the IPU load is still on even through the green indicator is no longer lit.

APPENDIX B

ENGINEERING DRAWINGS

APPENDIX B

ENGINEERING DRAWINGS

GE	
47E300323G1	Engineering Test Monitor Console
47E300104G4	Outer Shell Assy. (2 sheets)
47E300325G1	Readout Console
47C300169G1	Hot Frame Assy.
47E300327G1	IPU Simulator Console
47R300195	Generator Instr. Thermopile Installation
47D300225G2	Aft Hermetic Seal Assy.
47R300334	R.T.D. and Thermocouple Installation
47C300443	Cable Assembly
47R300403	Wiring Diagram Thermopile with Thermocouple Locations
47R300454	Cabling Hookup Mod. 5, 6. and 8
47D300100P1	Fwd. Hermetic Seal Assy.
47D300331	Type "A" Electric Fuel Capsule Simulator
47D300332	Type "B" Electric Fuel Capsule Simulator
47D210654	Vibration Table Mounting Fixture

APPENDIX B

ENGINEERING DRAWINGS

GE	
47E300323G1	Engineering Test Monitor Console
47E300104G4	Outer Shell Assy. (2 sheets)
47E300325G1	Readout Console
47C300169G1	Hot Frame Assy.
47E300327G1	IPU Simulator Console
47R300195	Generator Instr. Thermopile Installation
47D300225G2	Aft Hermetic Seal Assy.
47R300334	R.T.D. and Thermocouple Installation
47C300443	Cable Assembly
47R300403	Wiring Diagram Thermopile with Thermocouple Locations
47R300454	Cabling Hookup Mod. 5, 6. and 8
47D300100P1	Fwd. Hermetic Seal Assy.
47D300331	Type "A" Electric Fuel Capsule Simulator
47D300332	Type "B" Electric Fuel Capsule Simulator
47D210654	Vibration Table Mounting Fixture