01441

NUS CORPORATION

NUS-301
(VOLUME II)

RADIOLOGICAL CONTROL PROCEDURES APPLICABLE TO RADIOISOTOPE THERMOELECTRIC GENERATOR SNAP-27

VOLUME II
RADIOLOGICAL EMERGENCIES

By

Luis F. Garcia
Senior Technical Associate

And

Harry W. Calley
Technical Associate

September 30, 1966

NUS CORPORATION
1730 M Street, N. W.
Washington, D.C. 20036

NUS-301
(Volume II)

RADIOLOGICAL CONTROL PROCEDURES
APPLICABLE TO
RADIOISOTOPE THERMOELECTRIC GENERATOR SNAP-27

VOLUME II
RADIOLOGICAL EMERGENCIES

By

Luis F. Garcia
Senior Technical Associate

and

Harry W. Calley
Technical Associate

September 12, 1966

Approved Morton I. Goldman
Morton I. Goldman
Vice President
Environmental Safeguards Div.

Approved George H. Anno
George H. Anno
Project Engineer, SNAP-27

TABLE OF CONTENTS

		Page No.
1.	GENERAL	1
1.1	Scope	1
1.2	Responsibility	1
1.3	Description of SNAP-27	1
1.3.1	General Description	1
1.4	Radiological Accident--Definition	12
1.5	Potential Hazards	12
1.5.1	External Radiation Exposure	12
1.5.2	Internal Radiation Exposure	13
1.5.3	Detection	14
1.5.4	Avoidance of Internal Exposure	15
2.	RADIATION PROTECTION GUIDES FOR PEACETIME EMERGENCIES	15
2.1	Radiation Workers	16
2.1.1	External Exposures	16
2.1.2	Internal Exposures	17
2.2	Members of the Population	19
2.2.1	External Exposures	19
2.2.2	Internal Exposures	19
2.3	Contamination Guides	20
2.3.1	Consequences of ^{238}Pu Ground Contamination	20
2.3.2	Controlled Areas	24
2.3.3	Respiratory Protection	24

TABLE OF CONTENTS (Continued)

			Page No.
	2.3.4	Skin Surfaces	25
	2.3.5	Clothing	25
	2.3.6	Items	26
3.	PRE-PLANNING FOR EMERGENCY PROCEDURES		26
3.1	Time Divisions for Planning		26
3.2	Development of Individual Plans by Custodial Activities		26
	3.2.1	Management	27
	3.2.2	Health Physics Group	27
	3.2.3	Medical Group	28
3.3	Preparedness		28
3.4	Emergency Instrumentation and Equipment		28
3.5	Practice Drills		30
4.	HANDLING AND STORAGE -- IMMEDIATE EMERGENCY PROCEDURES		30
4.1	Determination of the Existence of an Accident		30
	4.1.1	Criteria	30
	4.1.2	Action	31
4.2	Emergency Alarms		32
4.3	Evacuation of Area and Immediate Actions		32
	4.3.1	Evacuation Route and Assembly Area	32
	4.3.2	Scram Rule	32
	4.3.3	Actions	32

TABLE OF CONTENTS (Continued)

		Page No.
4.4	Notification of Authorities	33
4.4.1	Authorities within Custodial Activity	33
4.4.2	Local and State Agencies	33
4.4.3	Atomic Energy Commission	34
4.4.4	News Media	34
4.5	Personnel Decontamination and First Aid	34
4.5.1	Personnel Decontamination	34
4.5.2	First Aid	37
4.6	Emergency Survey	37
4.6.1	Scope	37
4.6.2	Procedures	37
5.	TRANSPORTATION -- IMMEDIATE EMERGENCY PROCEDURES	39
5.1	Determination of the Existence of a Radiation Accident	39
5.2	Immediate Action	40
5.2.1	Action by First Observers	40
5.2.2	Action by Fire, Police and Emergency Services Pending Arrival of Special Teams	42
5.3	Notification of Authorities	44
5.3.1	Shipper (Custodial Activity)	44
5.3.2	Local and State Agencies	44
5.3.3	Atomic Energy Commission and Others	44
5.3.4	News Media	45

TABLES OF CONTENTS (Continued)

		Page No.
6.	LOST CAPSULE -- DETECTION AND RECOVERY	45
7.	RADIOLOGICAL EMERGENCY ASSISTANCE	46
7.1	Sources and Types of Assistance	46
7.2	Call for Radiological Emergency Assistance	46
7.2.1	Atomic Energy Commission	46
7.2.2	Department of Defense	47
7.3	AEC Team Function	47
8.	POST-EMERGENCY FUNCTIONS	48
8.1	Responsibility	48
8.2	Contamination Control	48
8.3	Recovery of Radioactive Material	49
8.4	Decontamination of Area and Equipment	49
8.5	Radioactive Waste	50
8.5.1	Packaged Radioactive Waste	50
8.5.2	Effluents	50
8.6	Follow-Up Bio-Medical Functions	51
9.	RECORDS	51
BIBLIOGRAPHY		52

LIST OF APPENDICES

		Page No.
A --	UNITED STATES ATOMIC ENERGY COMMISSION COMPLIANCE OFFICES	A-1
B --	CARDS CONTAINING RADIOLOGICAL EMERGENCY PROCEDURES	B-1
C --	AGENCIES AND ORGANIZATION OF THE INTERAGENCY COMMITTEE ON RADIOLOGICAL ASSISTANCE	C-1
D --	AEC REGIONAL OFFICES FOR RADIOLOGICAL ASSISTANCE	D-1

LIST OF TABLES

		Page No.
Table 1.1	Total Gamma and Neutron Dose Rates From SNAP-27 Components	13
Table 3.1	Instruments and Instrument Accessories	29

LIST OF FIGURES

		Page No.
Figure 1	SNAP-27/ALSEP Subsystems Deployed on Lunar Surface (Artist's Conception).	3
Figure 2	SNAP-27 - Generator Assembly.	5
Figure 3	SNAP-27 - Mechanical Integration Mockup Components.	6
Figure 4	Removal of Fuel Capsule From LEM Fuel Cask.	8
Figure 5	Removal of ALSEP Equipment Containers.	8
Figure 6	Packaging Concept for SNAP-27/ALSEP Components.	9
Figure 7	Fuel Capsule Locking System and Handling Tool.	11
Figure 8	^{238}Pu Ground Contamination vs. ^{238}Pu Air Concentration ^{238}Pu Crop Contamination and Dose Rate at 3 ft. Above Ground.	23

1. GENERAL

1.1 Scope

This volume contains emergency procedures, applicable to potential radiological accidents which may occur during handling, storage, and transport of the radioisotope thermoelectric generator SNAP-27 prior to launching. The procedures and limits contained herein are based on standards of applicable regulatory agencies and on information obtained from other references cited in the bibliography. The contents of this manual are intended to serve as a guide for the preparation of specific emergency instructions by the SNAP-27 custodial activities concerned.

1.2 Responsibility

Each SNAP-27 custodial activity concerned is responsible for the preparation of its own specific emergency instructions. Specific responsibilities of named individuals will be as specified in such instructions.

1.3 Description of SNAP-27

1.3.1 General Description. The SNAP-27 is a radioisotope fueled thermoelectric power supply being developed by the General Electric Company for the Atomic Energy Commission. This SNAP-27 generator, providing a minimum of 56 watts of DC power, will be used as the electrical power generation subsystem on the Apollo Lunar Surface Experiment Package (ALSEP) which is being developed for the NASA Manned Spacecraft Center. The ALSEP is a package of instruments and supporting subsystems that will be placed on the lunar surface by the astronaut and will transmit lunar geophysical information for a period of at least one year after departure of the spacecraft.

The objectives of the Apollo Program are the landing of men on the moon, limited observation and exploration of the moon by the crew, and return to earth. In addition to carrying lunar geological equipment and using this equipment on the surface, the astronaut will set up and activate the ALSEP which will be left on the lunar surface to transmit data after the astronauts have left the moon as shown in Figure 1. The SNAP-27 power subsystem will provide the electrical power for the ALSEP.

Prior to delivery of the flight unit, a total of fifteen full-scale generators and five mockups will be built and tested. These will be used for generator prototype development, qualification testing, life testing, astronaut training, and various system integration tests to be performed by the Manned Spacecraft Center and its ALSEP contractor. In parallel with the fabrication and testing of prototype and qualification generators, an extensive program of component development testing is being carried out to fully verify the design.

The present design weight of the fueled generator assembly including connecting cable and connections is approximately 38.6 pounds. The raw electrical output of the generator is a minimum of 56 watts.

The design of the fuel capsule heat protection system for the SNAP-27 RTG will permit the capsule to survive an abort from earth orbit and land intact without dispersing radioactive materials within the biosphere. This is the first aerospace SNAP program where the safety requirements dictate intact re-entry of the fuel capsule and an extensive series of arc tunnel heat transfer and aerodynamic tests are being performed to establish the reliability of the re-entry shield configuration.

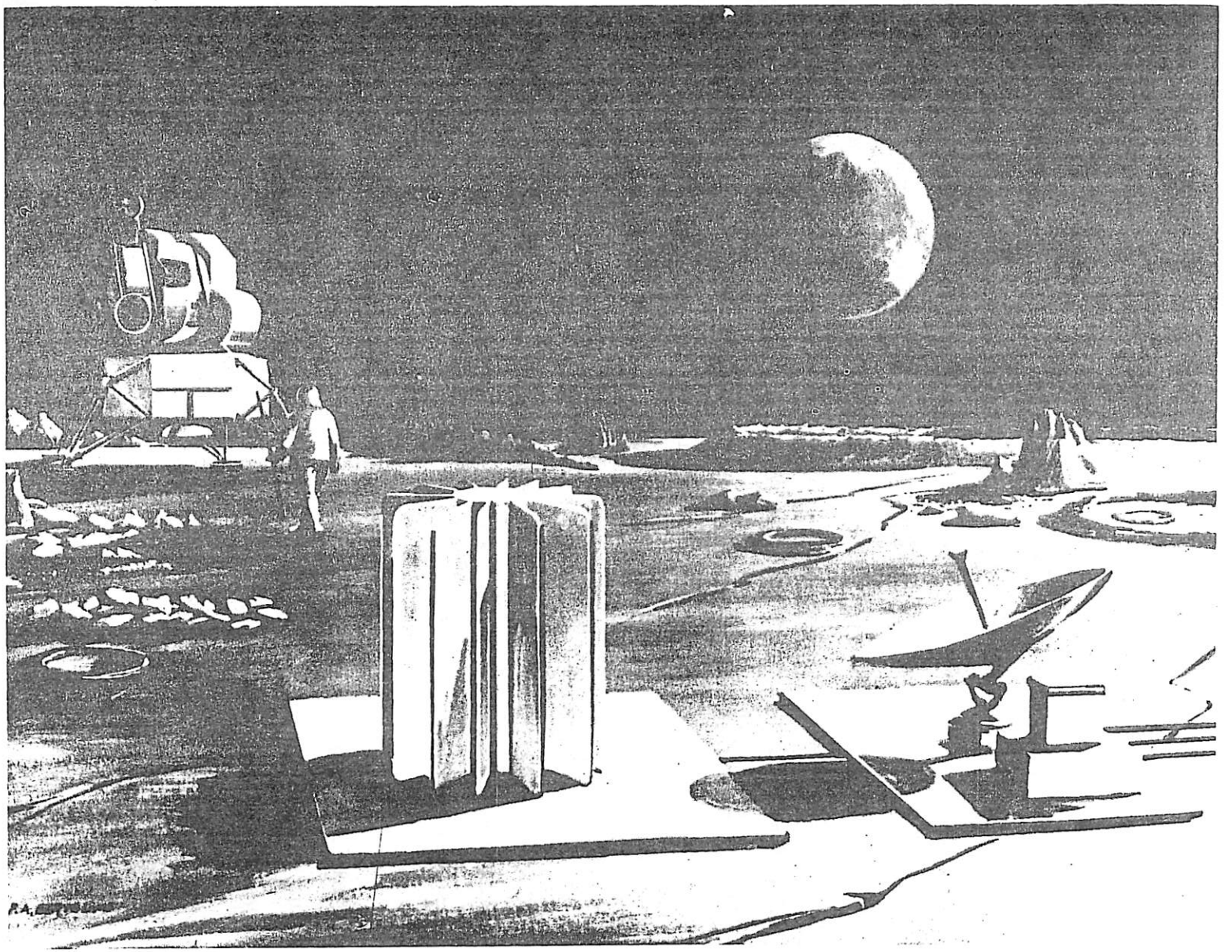

Figure 1. SNAP-27/ALSEP Subsystems Deployed on Lunar Surface (Artist's Conception)

Figure 2 indicates the SNAP-27 RTG assembly and Figure 3 presents mockup models of the RTG showing fuel capsule insertion with handling tool, the Lunar Excursion Module (LEM) fuel shipping cask, the fuel capsule handling tool, and the fuel capsule and generator and plate.

The SNAP-27 generator will be transported to the lunar surface within the scientific equipment bay of the Lunar Excursion Module (LEM) descent stage. The fuel capsule (heat source) will be transported to the moon in a separate protective cask, mounted on the LEM vehicle. This fuel cask will contain re-entry heat shielding which will assure intact re-entry from earth orbit. Thus, the generator will be transported to the moon in an unfueled condition. (No electrical power output is required during transport). After lunar landing, the ALSEP and SNAP-27 generator will be extracted from the LEM by one member of the crew, and carried to a location that provides optimum placement of the equipment and sensors. Generator fueling will be accomplished either prior to or after final placement on the lunar surface and the ALSEP operation will then begin.

The decision by the NASA to fuel the generator on the moon, rather than to carry a hot (fueled) generator within the LEM scientific equipment bay, was based on the following factors:

a. It is difficult to provide adequate heat removal for a fueled generator within the LEM equipment bay during the launch and lunar transit periods when the generator heat rejection fins have a poor view of space.

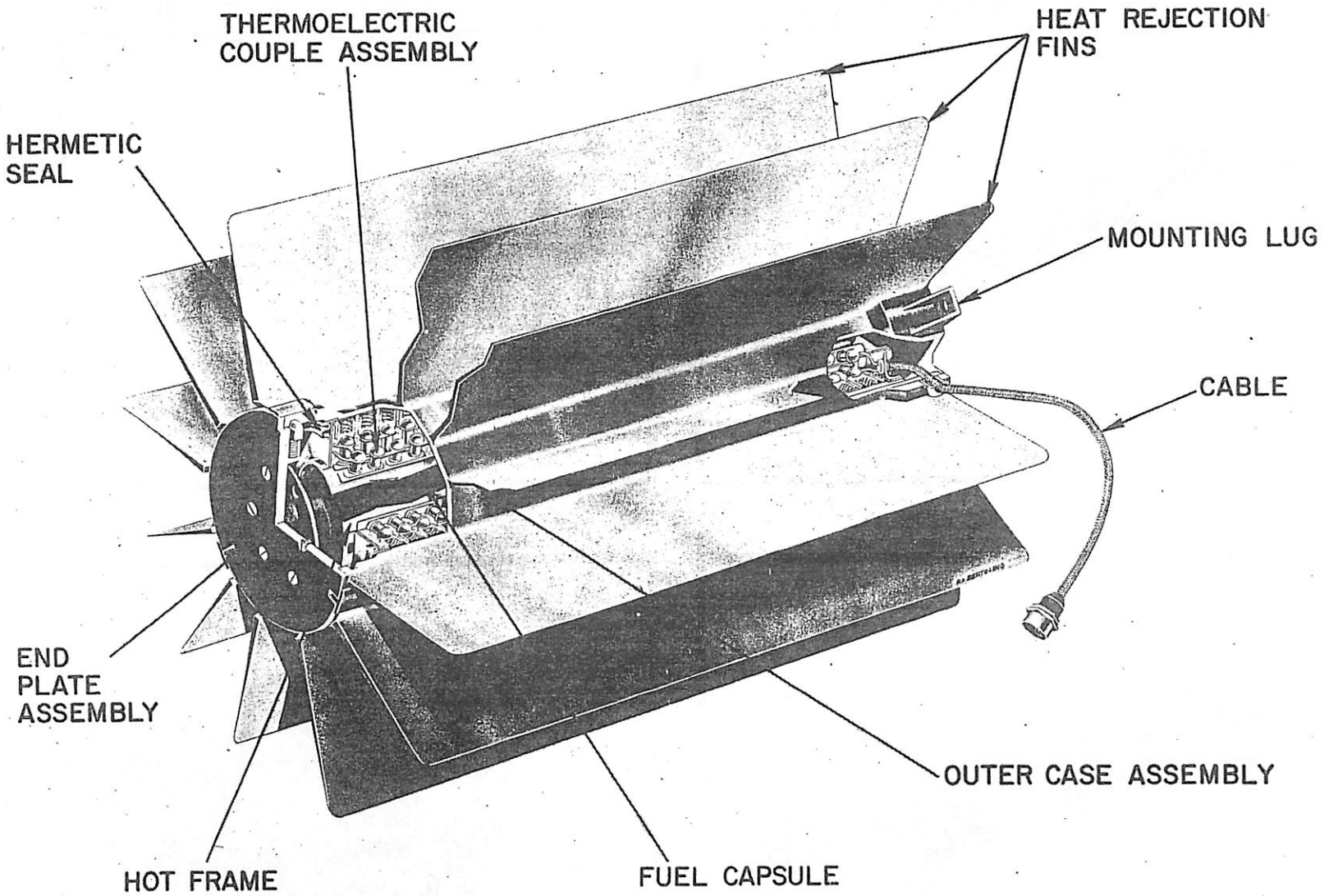

Figure 2. SNAP-27- Generator Assembly

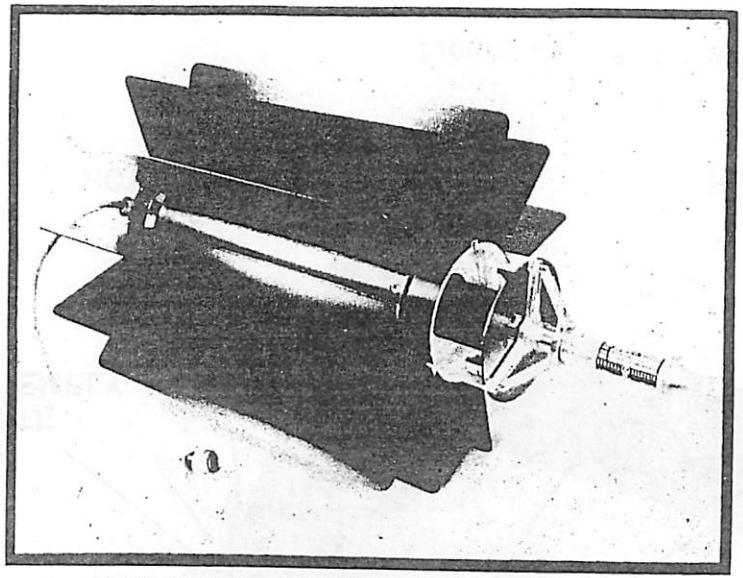

GENERATOR SHOWING FUEL CAPSULE INSERTION WITH HANDLING TOOL

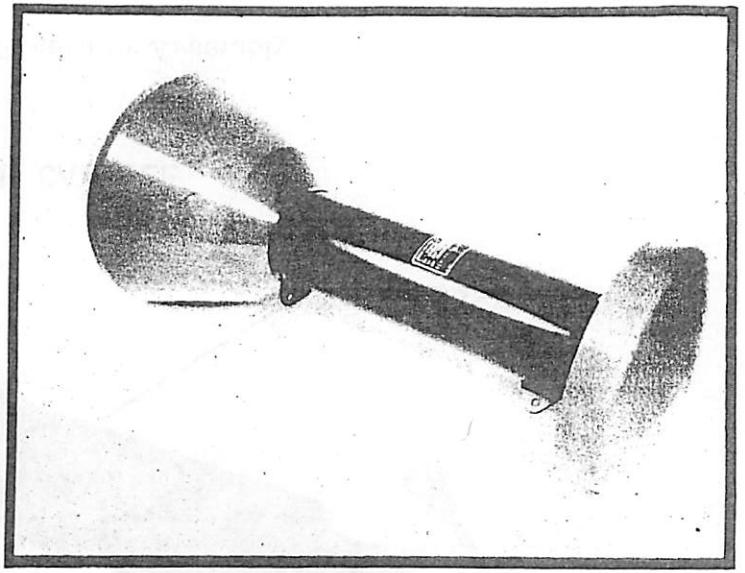

LEM FUEL SHIPPING CASK

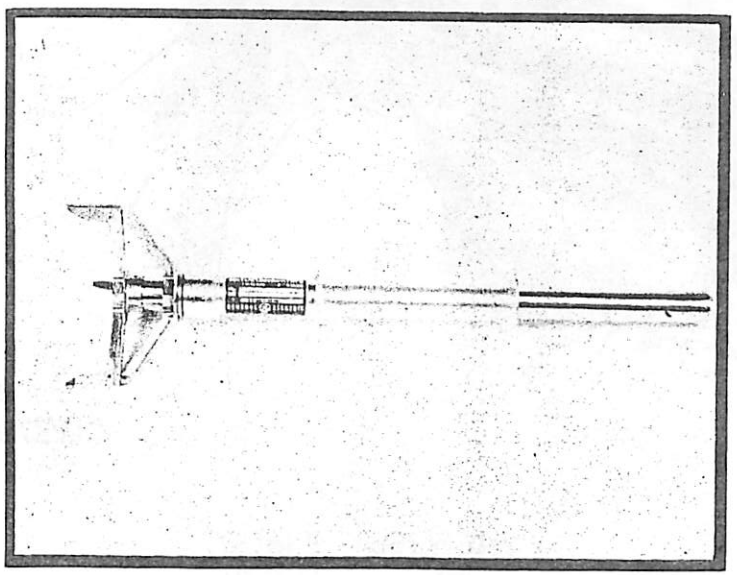

FUEL CAPSULE HANDLING TOOL

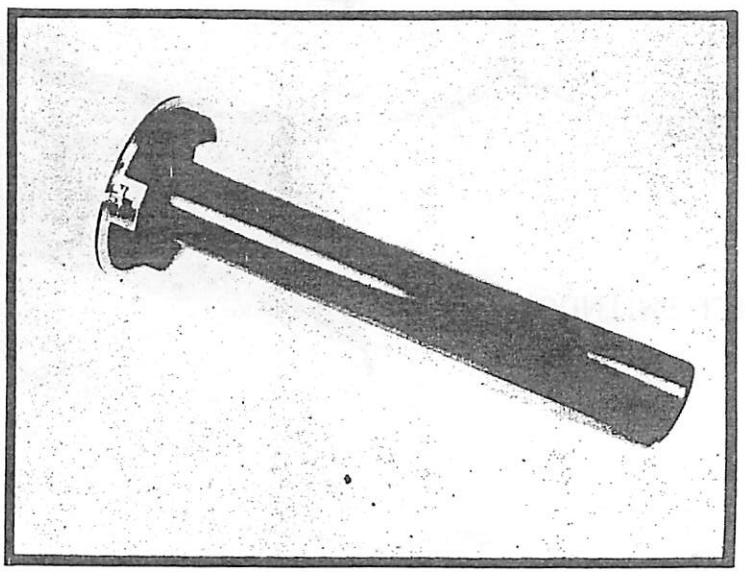

FUEL CAPSULE AND GENERATOR END PLATE

Figure 3. SNAP-27 Mechanical Integration Mockup Components

b. Astronaut safety considerations favor the handling of a cold generator on the moon to prevent high temperature fin surfaces from coming into contact with the astronaut's pressure suit. Thermal surface temperatures of the capsule will present a potential burn hazard to personnel during all phases of its handling.

c. The simplification of the interfaces between the ALSEP, SNAP-27, and the LEM vehicle, afforded by the use of a separately-shipped fuel capsule, permits greater flexibility in design and stowed equipment arrangement.

Figures 4 through 6 are artist's conceptions of possible lunar handling and deployment schemes for the SNAP-27/ALSEP/equipment. Figure 4 shows the removal of the fuel capsule from the LEM fuel cask, which is mounted outside the scientific equipment bay. The cask is rotated to the horizontal position and the hot capsule is withdrawn by means of a fuel capsule handling tool. The radiation from the exposed capsule is primarily low level neutron and gamma radiation and the maximum total dose rate will be approximately 54 mrem/hr at 1 meter from the fuel capsule.

Figure 5 shows the removal of the ALSEP equipment containers from the LEM, while the fuel capsule is temporarily suspended from the LEM landing structure. A possible packaging concept for one of the equipment containers is illustrated in Figure 6 where the unfueled generator is mounted to a honeycomb panel that also serves as the lunar mounting platform. The box structure attached to the base contains other ALSEP components mounted on the sides and top. After removal of the box, it could be carried to the final site, thus avoiding an extra trip to and from

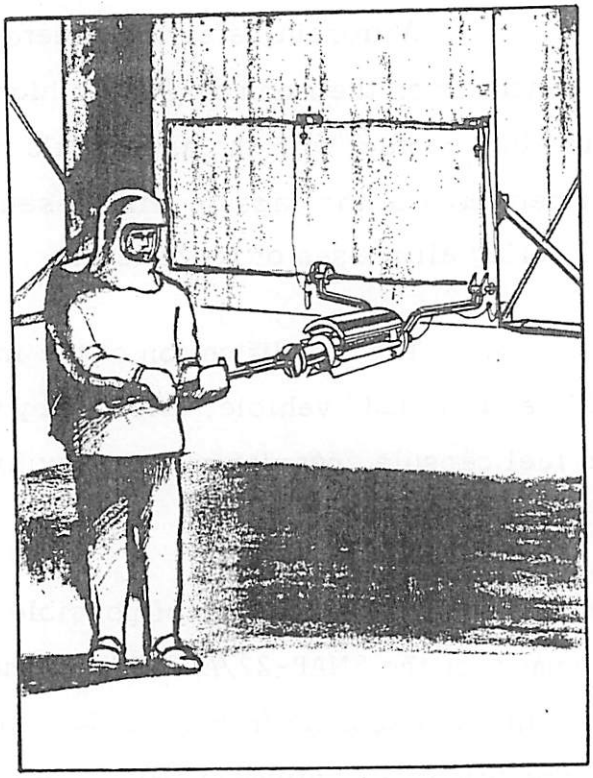

Figure 4. Removal of Fuel Capsule From LEM Fuel Cask

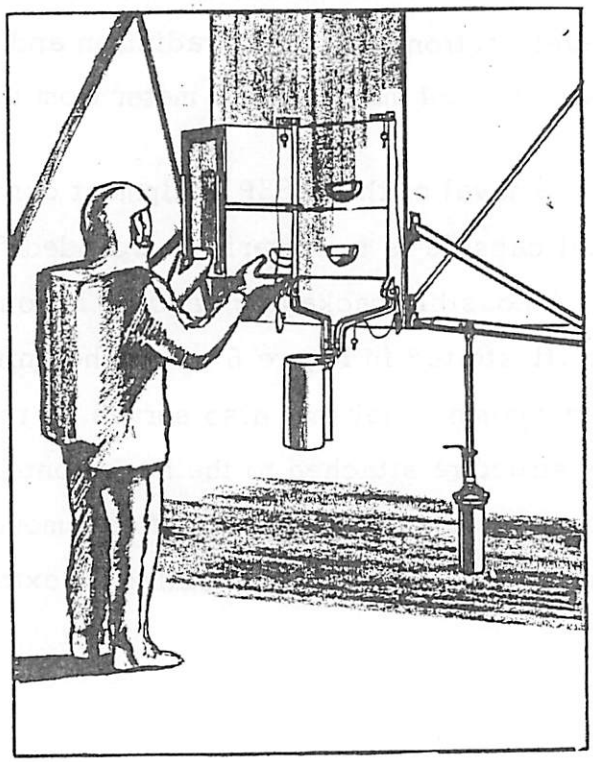

Figure 5. Removal of ALSEP Equipment Containers

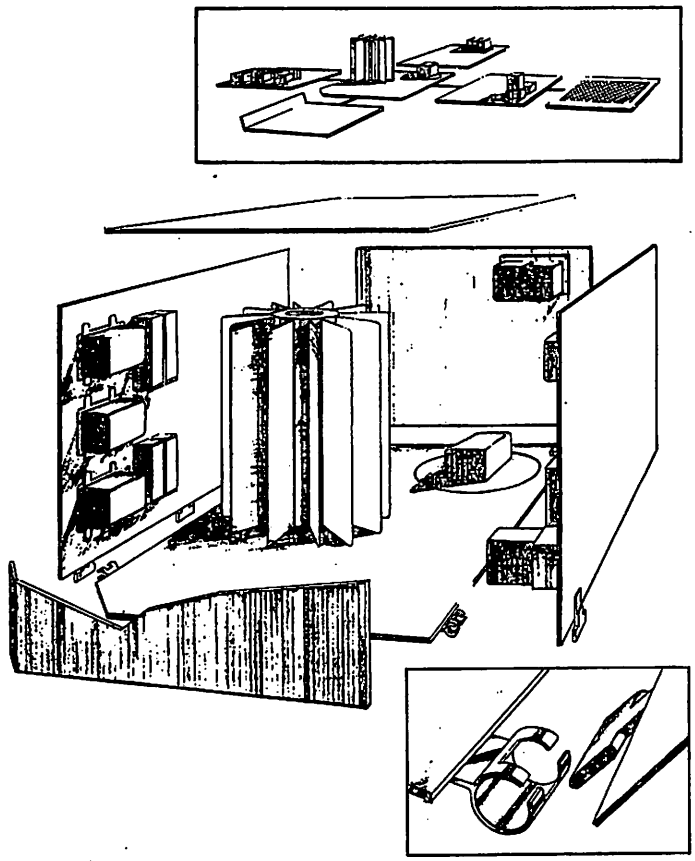

Figure 6. Packaging Concept for SNAP-27/ALSEP Components

LEM to obtain the fuel capsule. At least 25 minutes are required for the generator external surface to rise 200°F above ambient temperature after fuel insertion, and the fueled package could be carried by the crew member within this time interval. The tool used for the fueling operation (see Figure 7) is simple and uses only linear motion for locking and removal. Since large clearances are provided between the fuel capsule and the generator fuel cavity, a very high reliability can be associated with the fueling operation.

The high heat rejection temperature of the generator requires that care be taken in the placement of heat-sensitive electronic components immediately adjacent to the heat rejection surfaces. Large adjacent surfaces which block the generators view of space also affect its ability to reject heat and cause a rise in radiator temperature. Objects as large as the generator itself will cause less than a 10°F rise in radiator temperature if kept at least 2 feet away from the generator. Heat input to adjacent components from the generator can generally be kept reasonably low by:

a. A separation distance of several feet,

b. Orienting the surface with minimum area towards the generator (low view factor), and

c. Applying a low absorptivity/high emissivity coating to the exposed surface.

Thermal integration problems between the SNAP-27 and ALSEP on the lunar surface are expected to be minimal because of the flexibility allowed in equipment placement.

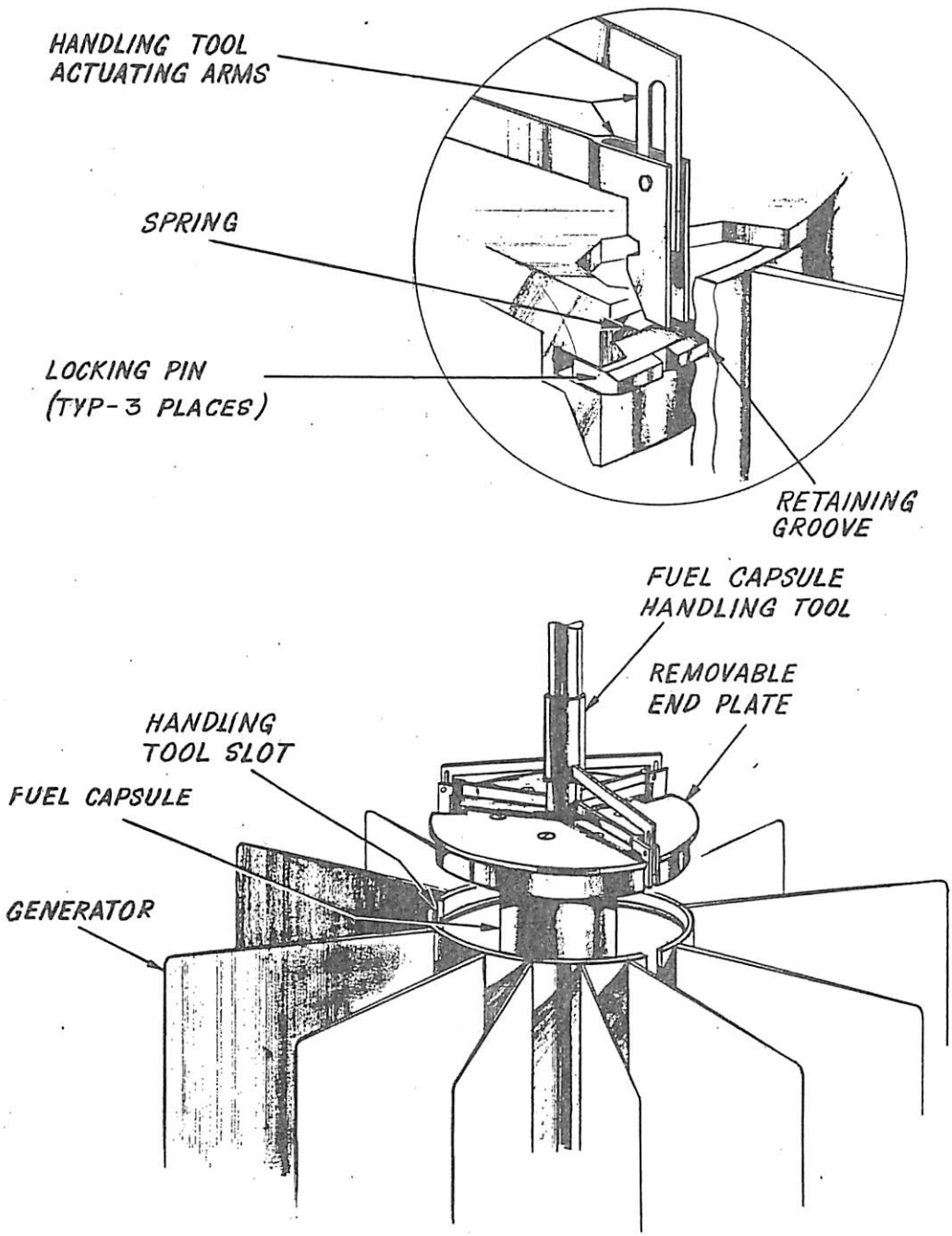

Figure 7. Fuel Capsule Locking System and Handling Tool

1.4 Radiological Accident--Definition

Any accident or condition which results, or which threatens to result, in the escape of radioactive material from the SNAP-27 fuel capsule shall be considered as a radiological emergency requiring implementation of the appropriate emergency procedures. Internal exposure of personnel to hazardous amounts of plutonium is considered to be the principal hazard which can result from a potential accident.

Since the mass of fissionable material in a SNAP-27 fuel capsule is considerably less then (approximately 1/5) the minimum mass required to achieve criticality under optimum conditions of geometry, and reflection, and in view of the handling and storage restrictions, the probability of an accidental criticality is considered too remote to be considered as a hazard in this manual.

1.5 Potential Hazards

A breach of fuel capsule integrity and subsequent dispersal of the fuel as a result of an impact or of its being involved in a sustained fire or explosion will result in varying degrees of hazard depending upon the mode, extent and location of the failure.

1.5.1 External Radiation Exposure. The dose rates from an integral unshielded SNAP-27 fuel capsule and other SNAP-27 components are shown in Table 1.1. These are high enough to represent a potential radiation exposure problem if radiation control procedures are not properly administered.

This hazard is significantly reduced however, if the fuel material is dispersed either as ground or air contamination since the principal plutonium isotopes involved are primarily alpha emitters.

TABLE 1.1

TOTAL GAMMA AND NEUTRON DOSE RATES
FROM SNAP-27 COMPONENTS

Component	mrem/hr at 1 meter from center	
	radially	axially
Bare fuel capsule	54	42
Fueled generator	50	42
Capsule in LEM cask	54	42
Capsule in ground shipping container	20	20

1.5.2 Internal Radiation Exposure. The dispersal of plutonium in the air and on the ground and the attendant potential for internal radiation exposure as a result of an "accident" is considered to be the most serious hazard.

Internal radiation exposure results from the deposition of radioactive material within the body by one of the principal modes described below.

(a) Inhalation

Inhaltion of airborne plutonium will result in its deposition in lungs and its subsequent translocation to critical organs. A critical organ is that part of the body that is most susceptible to radiation damage under the specific conditions considered and whose damage by the radiation results in the greatest damage to the body.

The critical organ for soluble plutonium isotopes is bone; the lungs and gastrointestinal tract are the critical organs for insoluble plutonium. Since the solubility of plutonium is very low, the lungs and gastrointestinal tract become principal organs of concern from the standpoint of emergency exposure.

(b) Ingestion

The SNAP-27 fuel form is very insoluble in the gastrointestinal tract, therefore, only a small percentage of the material ingested will be retained. This fraction will contribute to the total internal dose received by the individual.

(c) Injection

Plutonium may gain entrance to the body through wounds and abrasions. This route is a significant potential hazard in terms of internal exposure.

1.5.3 Detection. Conventional beta-gamma radiation survey instruments are of no value in detecting alpha radiation from plutonium. Special instruments are required to evaluate the hazards associated with an accident involving plutonium.

(a) Portable survey instruments. The Eberline alpha scintillation counter, model PAC-4S, having a range up to 2×10^6 cpm; and the Eberline gas proportional alpha counter, model PAC-4G, having a range up to 5×10^5 cpm are instruments with desirable characteristics for such measurements.

(b) Laboratory counting equipment: Internal gas flow proportional counters or alpha scintillation detectors should be used for assessing the activity levels of smears, air samples, and liquid samples if required.

1.5.4 Avoidance of Internal Exposure.

(a) Remain upwind and uphill from accident.

(b) For those who must enter smoke or contaminated areas, use the following devices to reduce personnel contamination: (1) mechanical breathing apparatus (e.g., air packs, aqualung, etc.) of supplied air types; (2) dust filter mask; (3) goggles; and (4) protective clothing (e.g., thin plastic coats, jackets, pants, shoe covers, gloves, and hood or surgeons cap).

(c) In building, evacuate area immediately and prevent dispersal by closing windows and doors and by shutting off ventilating and air conditioning systems.

(d) Survey personnel exposed for contamination.

2. RADIATION PROTECTION GUIDES FOR PEACETIME EMERGENCIES

In a strict sense, there is no such thing as a maximum permissible dose resulting from an uncontrollable exposure during a radiological accident. Dose limits for normal operations are based on the source of radiation (and subsequent exposures of personnel) being under control. On the other hand the source of radiation in a radiological accident and the immediate dose received by persons as a consequence of the accident are not subject to predetermined controls. Protective steps, however, can be taken to control continuing exposures of the persons involved. The type of and necessity for protective steps would be based on an evaluation of all factors involved--such as, nature of the accident, control measures available, number of persons involved, duration of the exposure, dietary and economic consequences of the control action, etc.

2.1 Radiation Workers.

The following recommendations, applicable to radiation workers, have been made by the International Commission on Radiological Protection (ICRP).

The maximum permissible doses recommended in this section are maximum values; however, it is recommended that all doses be kept as low as practicable, and that any unnecessary exposure be avoided.

2.1.1 External Exposures.

(a) Accidental High Exposure. An accidental high exposure that occurs only once in a lifetime and contributes no more than 25 rems shall be added to the occupational dose accumulated up to the time of the accident. If the sum then exceeds the maximum value permitted by the formula*, the excess need not be included in future calculations of the person's accumulated dose. Accidental exposure to doses higher than 25 rems must be regarded as being potentially serious, and shall be referred to competent medical authorities for appropriate remedial action and recommendations on subsequent occupational exposure. This is intended as an administrative guide to permit the continuation of work with radiation, following a bona fide accident ("once in a lifetime"), in cases in which interruption of such work, or curtailment of exposure, would handicap the individual in the pursuit of his career.

---

*Formula is: Maximum permissible accumulated dose, Rems = 5 (N-18), where N is the individual's age in years.

(b) Emergency Exposure. Emergency work involving exposure above permissible limits shall be planned on the basis that the individual will not receive a dose in excess of 12 rems. This shall be added to the occupational dose accumulated up to the time of the emergency exposure. If the sum then exceeds the maximum value permitted by the formula*, the excess shall be made up by lowering the subsequent exposure rate so that within a period not exceeding 5 years, the accumulated dose will conform with the limit set by the formula. Women of reproductive age shall not be subjected to such emergency exposure.

2.1.2 Internal Exposures

(a) Accidental High Exposure. In the case of an accidental high exposure to radioactive material where the total intake of radioactive material exceeds the amount that would result from intake for 1 year at the maximum permissible levels for occupational exposure to such radioactive material given in the Report of Committee II (ICRP Publication 2), an estimate of the intake resulting from the exposure shall be entered on the individuals record and shall be referred to competent medical authorities for appropriate action. Appropriate action should be taken to prevent further exposure of the individual during subsequent periods of time.

(b) Emergency Exposure. Emergency work involving exposure to radioactive materials at levels above the normal maximum permissible concentrations shall be planned on the basis that the total intake of

---

*Formula is: Maximum permissible accumulated dose, Rems = 5 (N-18), where N is the individual's age in years.

radioactive material during the emergency period should not exceed the cumulative intake that would result from exposure for 1 year at the maximum levels (MPC values) for occupational exposure to such radioactive materials given in the Report of Committee II (ICRP Publication 2). If significant exposure to external sources might be expected to occur concurrently, the annual intake referred to above should be estimated to make allowance for the dose equivalent delivered by the external sources (ICRP Publication 2, page 24). The 50-year integrated dose to the critical organ from such an intake will not exceed 5 rems for the whole body, blood-forming organs or gonads; 30 rems for skin, thyroid and bone*; and , 15 rems for other organs .

(c) Short Term Exposures to Radioactive Materials

One or more short-term exposures to radioactive materials within a period of 13 consecutive weeks are considered acceptable if the total intake of radioactive material during this period does not exceed the cumulative intake allowed when exposure occurs for 13 weeks at the maximum levels (MPC values) for occupational exposure given in the Report of Committee II (ICRP Publication 2). If significant exposure to external sources occurs concurrently, the quarterly intake referred to above should be estimated to make allowance for the dose equivalent delivered by external sources (ICRP Publication 2, page 24). The 50-year integrated dose to the critical organ from such an intake will not exceed 1.3 rems for the whole body, blood-forming organs or gonads, 8 rems for skin, thyroid and bone*, and 4 rems for other organs.

---

*The dose to bone is based on a body-burden of 0.1 μCi of Ra^{226}.

NOTE: In applying the recommendations, the objective should be to minimize exposure as far as practicable and to avoid exposure that is unnecessary.

2.2 Members of the Population.

2.2.1 External Exposures. For the purposes of this manual, the external exposure limits for members of the general public during an emergency may be considered to be:

(a) 15 rem - to children up to the age of 16 years and pregnant women.

(b) 25 rem - to all other persons.

2.2.2 Internal Exposures. From the Protective Action Guides developed by the Federal Radiation Council for acute contaminating events involving the bone-seekers Strontium-89 and Strontium-90, one may infer the following to be the maximum permissible doses (MPD) to individuals in a population group from emergency dietary intake of plutonium:

(a) 10 rems - maximum permissible dose to bone marrow for first year following the event.

(b) 15 rems - maximum permissible accumulated dose to bone marrow.

NOTE: As an operational technique, these limits may be assumed to be met if the average dose to a suitable sample of the exposed population group does not exceed one-third of the corresponding numerical value cited above.

For the emergency inhalation problem, the British Medical Research Council has used a maximum total dose of 15 rems to the lung. These basic criteria (i.e., primary standards) are used to compute the maximum permissible total intakes, and, for inhalation, the time integrals of the concentrations in air following the accident.

2.3 Contamination Guides.

2.3.1 Consequences of ^{238}Pu Ground Contamination. There is no level of ^{238}Pu ground contamination which represents a point above which there would be significant radiation problems present and below which there would definitely be none. Therefore, any single value presented as a ^{238}Pu ground contamination limit would misrepresent the total situation. In essence, then, any readily detectable ^{238}Pu does, at least potentially, represent a radiological problem of some degree. The magnitude of the problem is very dependent on the particular situation which exists at the time in question. In fact a subtle change in the situation at hand could significantly increase or decrease the magnitude of the problem. For instance, it appears that a change from wet-weather to dry-weather conditions could increase by orders of magnitude the concentration of resuspended ^{238}Pu in air. Figure 8 illustrates these aspects of ^{238}Pu ground contamination.

(a) Resuspension of ^{238}Pu

The resuspension factor, K, is defined as:

$$K(m^{-1}) = \frac{\text{Airborne concentration (units/m}^3)}{\text{Surface contamination (units/m}^2)}$$

The value of K applicable to a specific area and at a specific ground contamination level is dependent on the degree of motion occurring, or which will

occur, in the area. An active area for purposes of this report is defined as any area in which there is movement by animal or man, by foot or in a vehicle.

In turn, a quiescent area is defined as an area in which there is no movement by animal or man. The range of K values applicable to an active area is 10^{-4} to 10^{-6} and to a quiescent area is 10^{-6} to 10^{-8}, with vehicular traffic representing the highest level of activity. Ground contamination levels versus air concentrations are plotted for this range of possible values of K in Figure 8.

(b) Contamination of Food Crops

Plutonium is not concentrated at any point in man's food cycle and the transfer through the soil with subsequent uptake by the roots of plants is insignificant. The only mode of contamination is then direct deposition onto a field crop. Consequently, the Federal Radiation Council's (FRC) Category II Protective Action Guide (PAG) of 5 rads to the bone marrow or whole body of individuals in the first year following a contaminating event would apply if compensated for the relative insolubility of ^{238}Pu. The term "Protective Action Guide" has been defined as the projected absorbed dose to individuals in the general population that warrants protective action following a contaminating event; and a "protective action" is an action that will avert most of the exposure that would otherwise occur.

The approach taken was to determine as a function of ^{238}Pu ground contamination the daily consumption rate for a period of one year of an idealized contaminated food crop which corresponded to the FRC's Category II PAG. The idealized food crop was specified as having 2 Kg/m^2 of ground coverage, 20% of which is edible. It was assumed that 100% of the ^{238}Pu is deposited at

least initially on the idealized food crop; the effective half-life of the ^{238}Pu on the food crop is 13 days; and, no loss of ^{238}Pu during processing of the food crop occurred.

The results were plotted versus ground contamination in Figure 8. The results were also compared against dietary data and the following conservative conclusions reached.

In order for the FRC's Category II PAG to be exceeded,the following would probably have to occur:

Range A - Contamination of more than one major food crop.

Range B - Contamination of a major food crop

Range C - Contamination of any food crop.

Due to the necessary conservatism in the assumptions upon which this conclusion is based, the three ranges are representative of the upper limit of the radiation problem direct contamination of field crops could potentially cause.

(c) Use of Figure 8.

The most significant parameter which can be determined from Figure 8 is stay time, whether it is a matter of hours or weeks, based on a total dose limit or standard. However, the prudent use of professional judgment is essential in any determination based on Figure 8. If two areas were contaminated to the same level, say 10 $\mu Ci\ ^{238}Pu/m^2$, in one of which the only activity is men on foot and in the other there is vehicular traffic, two different stay times should be determined. In the first area the K selected should be on the order of 10^{-5} and in the second, on the order of 10^{-4}. The total lung dose per week of occupancy would be approximately 0.9 rem in the

FIG. 8

^{238}PU GROUND CONTAMINATION VS. ^{238}PU AIR CONCENTRATION, ^{238}PU CROP CONTAMINATION, AND DOSE RATE AT 3FT. ABOVE GROUND

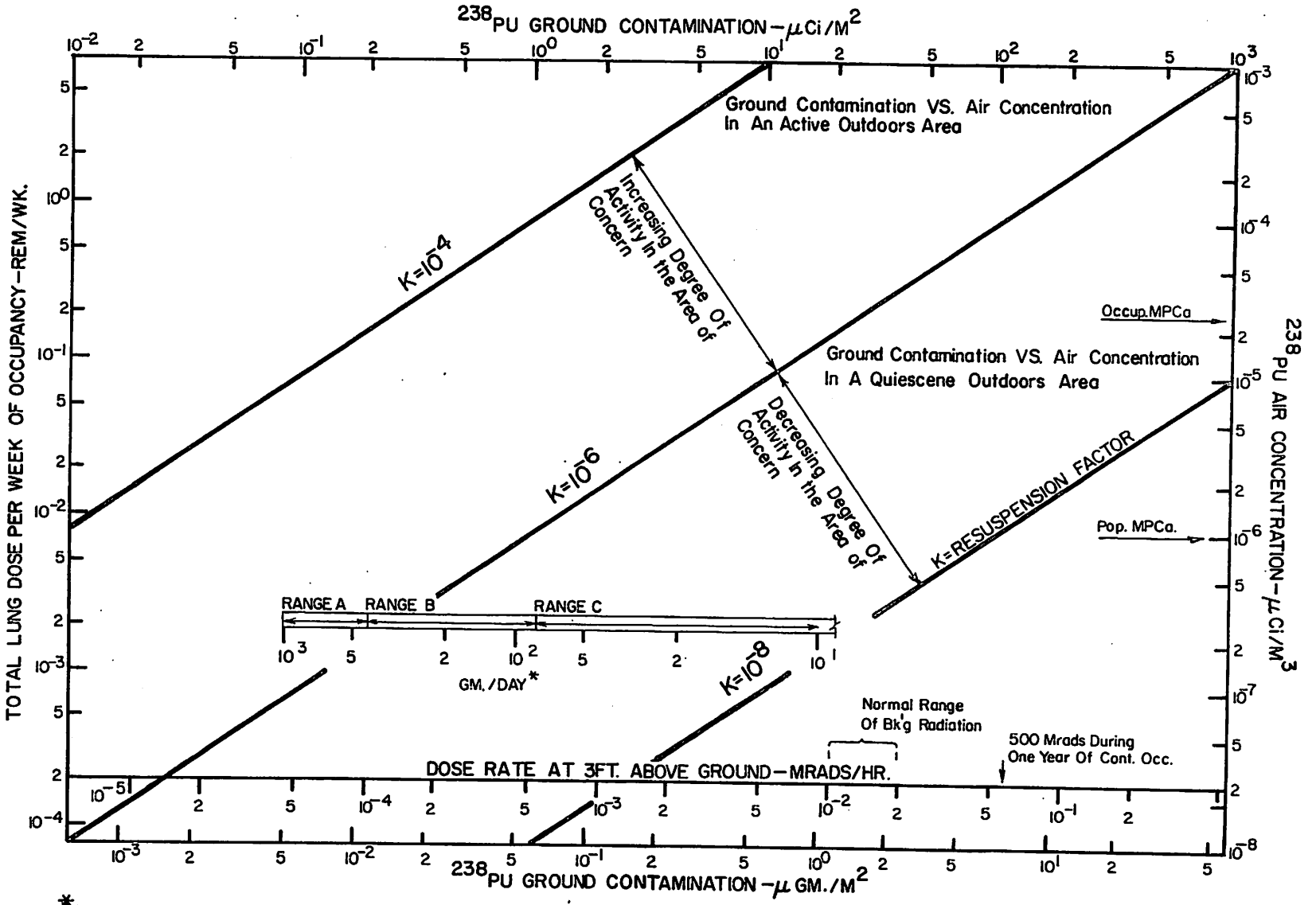

*CONTAMINATED FOOD CROP CONSUMPTION RATE – GM/DAY WHICH CORRESPONDS TO THE FRC's CATA II PAG

first area and 7.5 rem in the second area. Using 15 rem as the total dose limit, a stay time of 17 weeks is determined for the first area and 2 weeks for the second area. The actual stay time in an area will be determined at the time of the contaminating event by taking appropriate air samples and radiation level measurements, and by the use of respiratory protection.

2.3.2 Controlled Areas. The following levels may be used as a guide in the establishment of controlled areas:

		Alpha	Beta-Gamma
(a)	Airborne Contamination	3.0×10^{-11}	1.0×10^{-10}
(b)	Direct reading surface contamination	$\frac{250 \text{ cpm}}{100 \text{ cm}^2}$	0.1 mrem/hr
(c)	Transferable surface contamination (dpm/100 cm^2)	150	1×10^3

2.3.3 Respiratory Protection. Following is a guide for respiratory protection from airborne contamination:

Levels (μCi/cc)		Respiratory Equipment Required
Alpha	Beta-Gamma	
$< 2 \times 10^{-12}$	$< 3 \times 10^{-9}$	None
	3×10^{-9} to 1.5×10^{-8}	Half face respirator with mechanical filter.
2×10^{12} to 1×10^{-10}	1.5×10^{-8} to 7.5×10^{-7}	Full face respirator with mechanical filter.
$> 1 \times 10^{-10}$	$> 1.5 \times 10^{-7}$*	Supplied air respirator (scott air-PAC or positive pressure hood or suit)

*Note - Consider external radiation exposures in these cases.

2.3.4 Skin Surfaces. Following are maximum permissible contamination guides for skin surfaces:

		Direct Survey		Transferable (Smear)
		Alpha (dpm/100cm^2)	β-γ(mrad/hr)	α, β-γ
(a)	General	150	<0.06	None Detectable
(b)	Hands	150	<0.3	None Detectable

2.3.5 Clothing. Following are maximum permissible contamination guides for clothing.

	Direct Survey		Transferable (Smear)	
	α	β, γ	α	β, γ
Item	(dpm/100 cm^2)	(mrad/hr)	(dpm/100 cm^2)	
Shoes, contamination zone:				
Inside	300	1.0	30	1,000
Outside	300	2.5	30	1,000
Shoes, personal:				
Inside	300	0.3	30	1,000
Outside	300	0.6	30	1,000
Clothing, contamination zone:	150	0.75*		
Clothing, other company issued, and personal	150	0.25		

*No 100-square inch area to average greater than this value.

2.3.6 Items. Following are permissible contamination guides for items given a radiation or contamination clearance, except as otherwise stated:

(a) No smearable α contamination above 5 $\mu\mu$Ci/100 cm^2.

(b) 75 dpm/61 cm^2 α measured with PAC-4G instrument.

(c) 0.1 mrem/hr β with G-M survey meter.

(d) 450 $\mu\mu$Ci/100 cm^2 smearable β γ contamination.

3. PRE-PLANNING FOR EMERGENCY PROCEDURES

3.1 Time Divisions for Planning.

For the purposes of this manual, two general periods are considered:

(a) Immediate Emergency Period -- the period of time from the occurence of the radiation accident to the effecting of appropriate radiological controls. During this period, the required immediate actions for radiological safety purposes and for emergency care and necessary hospitalization of injured individuals are carried out, and an operational program for the post-emergency period is prepared. This manual is primarily concerned with the procedures for the immediate emergency period.

(b) Post-Emergency Period -- the period following the immediate emergency period. General guidance for the post-emergency period is contained in Section 8 below.

3.2 Development of Individual Plans by Custodial Activities.

As indicated in paragraph 1.2, each SNAP-27 custodial activity shall prepare an emergency plan specifically applicable to it. Such a plan of action shall integrate responsibilities of management, health physics and

medicine. An activity not having a Radiological Safety Officer shall appoint a trained and qualified individual to this position. The plan shall identify individuals by name, as applicable. Assignment of responsibilities in such a plan may be as indicated below. Overall guidance for the preparation of emergency plan may be obtained from the contents of this manual

3.2.1 Management. The responsibilities of management include:

(a) Mobilizing auxiliary help for medical and Health Physics teams.

(b) Taking necessary action in event of fire and explosion.

(c) Advising Atomic Energy Commission and local safety and public health authorities.

(d) Preparing immediate press, radio, and television bulletins, giving necessary precautions and reassurance as indicated.

(e) Alerting community hospital facilities as directed by physician.

3.2.2 Health Physics Group. The responsibilities of the Health Physics Group include:

(a) Closing off radiation area. If contamination is a factor, the area must be sealed.

(b) If contamination is present, shutting off air conditioning and ventilators insofar as possible.

(c) Beginning immediate radiation survey mapping.

(d) Assisting medical group in obtaining surveys of contaminated individuals.

(e) Establishing a decontamination center if needed.

(f) Doing area and personnel wipe tests.

(g) Preparing equipment for collections of body fluids, wipes of individuals, etc.

3.2.3 Medical Group. The responsibilities of the medical group include:

(a) Providing medical care and necessary hospitalization of injured individuals.

(b) Performing other assigned medical functions of the radiological safety program.

3.3 Preparedness. The check list of the essential items of the emergency plan should be prepared and used to periodically determine readiness for a radiological emergency. The current status of each item can be designated as satisfactory, marginal, or unsatisfactory -- as applicable -- and appropriate action taken to achieve the required degree of preparedness.

3.4 Emergency Instrumentation and Equipment. One or more emergency kits containing instrumentation and equipment required in the event of a radiation accident should be stocked and maintained in readiness at conveniently accessible point(s) located outside of the potential contamination zone. This kit should be specifically marked and kept for the purpose of emergency monitoring only. The types and quantities of instrumentation and accessories recommended for these kits are listed in Table 3.1. Specific

TABLE 3.1

INSTRUMENTS AND INSTRUMENT ACCESSORIES

Item	Number Assigned
Ionization Chamber--Alpha Survey Meter	2
Portable Alpha Counter (PAC-4G)	6
Cables (PAC-4G)	12
Probes (PAC-4G)	12
Probe Handles (PAC-4G)	6
Cases, Carrying (PAC-4G)	4
GM Portable	6
GM Portable End Window Counter	1
Ionization Chamber--Juno 500 R	3
2π Internal Gas Flow Counter (PC-3A)	1
Portable Neutron Counter (PNC-1)	1
Wet Plutonium Monitor (WM-1)	1
Air Sampler with Sampling Head (PAS-GE-2)	1
Dosimeters (100 R)	12
Charger, Dosimeter	1
Standards, Field (^{239}Pu)	6
Standards, Calibration Flat Plate (^{239}Pu)	4
Sampler, Gas, 3.5 Liters	2
Head Set Earphone	6
Badges, Film	12

personnel concerned must be thoroughly familiar with the contents of the kit and with their proper use. All items in the kit must be inspected regularly, and calibrated, maintained or replaced -- as applicable.

3.5 Practice Drills. Adequate training with practice of the emergency plan should be conducted every three months. Inspection of the contents of the emergency kits can be combined with the practice drill and at other times frequently enough to ensure that the instrumentation is functioning and properly calibrated.

4. HANDLING AND STORAGE -- IMMEDIATE EMERGENCY PROCEDURES

Following are the immediate emergency procedures to be followed in the event of a radiation accident involving the radioactive material capsule of a SNAP-27 and occurring during its handling or storage within the custodial activity.

4.1 Determination of the Existence of an Accident.

4.1.1 Criteria. For the purposes of this manual any one of the following occurrences shall be considered indicative of the existence of a radiation accident involving plutonium (alpha) contamination:

(a) Positive results of surface contamination checks (Section 3.4.2 of Volume I).

(b) Positive results (excluding radioactivity) of airborne radioactivity measurements (Section 3.4.3 of Volume I).

(c) Positive results of leak-testing of radioactive material capsule (Section 3.5 of Volume I).

(d) Alarm from a continuous air monitor for particulate alpha activity. (Alarm points are set at a level that will permit activities to

proceed without unnecessary interruption to work programs, and still warn of potentially hazardous concentrations of airborne activity. In areas where the natural background of the monitor is low and relatively stable, the alarms are set at the count rate equivalent to a concentration of 1 MPC. Where the monitor background is high and fluctuates frequently, the alarm settings are set high enough to avoid unnecessary alarms):

(e) Impact which may have damaged the source capsule.

(f) Fire or explosion which may have involved the source capsule.

(g) Visual evidence of radioactive material escaping or having leaked from the source capsule.

(h) Any positive evidence of SNAP-27 radioactive material outside of the sealed capsule, or any accident or condition which results or which threatens to result in the escape of radioactive material from the capsule.

4.1.2 Action. Subsequent action required to be taken for the purposes of protecting health and of minimizing danger to life and property are dependent on available data or on judgment. Regardless of the magnitude of the actual or potential accident, rapid response is essential. The consequences of an apparently trivial incident are sometimes more serious than at first suspected. Rapid and efficient handling of minor situations will also provide excellent training for a well directed effort in a more serious case. In all cases, the most important immediate actions are aimed at preventing or minimizing inhalation of airborne radioactivity and the spread of contamination.

4.2 Emergency Alarms.

Distinguishing emergency alarms signals should be established for building and site evacuation, fire, and air raid. These alarms should be audible at any location in the facility. Periodic testing of the alarm signals is recommended to insure that the system is operating and to periodically remind personnel what each signal means.

4.3 Evacuation of Area and Immediate Actions.

4.3.1 Evacuation Route and Assembly Area. The emergency plan of each custodial activity shall indicate the specific evacuation route(s) to be used and the area(s) in which the evacuees are to assemble. The assembly areas shall be so chosen that the probability of their being involved in the contaminating event is very remote.

4.3.2 Scram Rule. Evacuation is to be according to the scram rule, which states that all persons shall evacuate the radiation area with all possible speed upon notification or if events "seem" to get out of control. It is advisable, while scramming, to shout an alert to other people in the area who may not be aware of the situation. Each person involved will be indoctrinated in the importance of the scram rule.

4.3.3 Actions. After persons involved have been evacuated, carry out the following actions as rapidly and as simultaneously as possible.

(a) Close off the area.

(b) Notify authorities (See Section 4.4 below).

(c) Have persons remain in assembly area(s) until they have been checked for contamination and if necessary, decontaminated. The

assembly area should not present a radiological problem. Unnecessary tracking of contamination may result if they go off to different areas. Additionally, it is important to ascertain that a radiological hazard does not exist in the assembly area.

(d) Close windows, and shut off exhaust fans (unfiltered) and forced-air types of air-conditioning or heating systems. (Air-conditioning/heating system controls should be located near entrance to area so that the systems can be readily turned off. The ventilation system should be so designed that air flows cannot disperse airborne radioactivity throughout entire building).

(e) Follow safeguards procedures specified in the SNAP-27 manual, concerning accessory equipment.

4.4 Notification of Authorities.

4.4.1 Authorities within Custodial Activity. Post "Emergency Notification Instructions" near the radiation area and in all other locations of interest (e.g., the health physics office). These instructions are to contain the names and telephone numbers (office and home) of individuals and organizations (e.g., fire department and dispensary or hospital) to be contacted. The individuals should include the Radiological Safety Officer, the group leader responsible for the SNAP-27 and the director or responsible administrator of the custodial activity. Include in the instructions the information to be given by the caller and any other pertinent information. These instructions are to be maintained in a current status.

4.4.2 Local and State Agencies. Notify the local, state, and federal agencies (health, fire or police departments) if required by existing

laws or agreements, or if their assistance is needed. If such notifications are not immediately necessary, postpone them until a later time.

4.4.3 Atomic Energy Commission.

(a) Requirement. Criteria and procedures for notifying the AEC of radiation incidents and of theft or loss of radioactive material are contained in paragraphs 5.6 and 5.7 of Volume I. For the purposes of Volume II, however, upon determination of the existence of an accident on the basis of criteria specified in paragraph 4.1.1 above, the custodial activity shall immediately notify by telephone and telegraph the appropriate AEC Regional Compliance Office shown in Appendix A of this volume.

(b) Call for Assistance. If the need exists for outside assistance in the form of advice or of equipment, materials, special services, or trained men, obtain the required assistance in accordance with procedures in Section 7 below, and also in accordance with any specific instructions obtained from the AEC Regional Compliance Office notified of the accident.

4.4.4 News Media. If the accident is severe and especially if contamination of uncontrolled areas has occurred, notification of the press and radio should be carried out by a designated representative of the administration of the custodial activity who is skilled in these matters, in accordance with established policies of the activity.

4.5 Personnel Decontamination and First Aid.

4.5.1 Personnel Decontamination.

(a) All individuals actually or potentially involved in the accident (generally, those persons in the designated evacuation assembly

area) shall be surveyed for contamination. If no alpha-contamination instrument is available all possibly exposed persons shall be regarded as contaminated.

(b) Contaminated clothing shall be removed carefully and placed in paper bags or on top of large paper sheets designated for this purpose. Such items shall be set aside for later decontamination or disposal as radioactive waste -- as applicable.

(c) Decontamination of personnel should be carried out promptly by showering, using commercially available soaps or detergents. Highly alkaline soaps, abrasives, organic solvents, or cleaners that tend to increase the permeability of the skin should not be used. Scrub brushes may be used, but care should be taken that the skin surfaces do not become abraded. Several separate washing should be performed. Special emphasis should be given to cleaning of fingernails, toenails, nostrils, scalp, ears, and the body folds.

(d) After body is well washed, check person for alpha contamination, with a suitable monitoring instrument. Smear wipes may also be taken, especially if alpha survey instruments are not available. Nasal and ear-canal swabs with cotton tipped applicators should also be used -- if considered appropriate.

(e) Small cuts and other breaks in the skin surface should be sought for carefully, since absorption of plutonium can occur by this route. Such lesions should be decontaminated after the above washes by repeated 5-minute scrubs after removal of scabs and crusts.

(f) Suitable syringes, curved basins and appropriate irrigating solutions should be readily available for conjunctival irrigation. The used solutions should be saved for counting, preferably in separate labeled bottles marked as to order of collection.

(g) Issue to decontaminated persons replacement clothing (known to be uncontaminated) from the emergency stock on hand.

(h) Bioassay Samples. Arrange for the collection of urine and fecal samples from contaminated persons, as indicated below:

(1) Quantitative collection of urine for the first 72-hours for assay of plutonium. Each day's specimens should be put in a separate container. These specimens may be collected in plastic bottles containing 10 ml of dilute nitric acid (approximately 10 ml of concentrated nitric acid per liter of water) for each 24-hour specimen. An additional 10 ml of concentrated nitric acid should be added to the specimens after the collection is complete.

(2) Feces collected for the first 72-hours for determination of radioactivity. Each day's specimens should be put in a separate container. These can be collected in round, 1-quart (1-liter) ice cream containers.

(3) Store collected specimens of urine and feces under refrigeration and keep them until arrangements can be made for plutonium analysis at a qualified laboratory.

(i) Arrange, through the medical department, to have contaminated persons be given surveys of the total body with sensitive alpha and beta-gamma instruments.

(j) Record the following information immediately in an appropriate log: person, date, time, instrument, initial reading, final reading (after each decontamination), and any pertinent remarks.

4.5.2 First Aid. Prompt attention to persons who sustain physical injuries (e.g., burns, fractures, wounds, etc.) is the first responsibility of the physician and others at the scene of the accident after the patients have been surveyed for contamination. If patient is contaminated, the physician and members of the medical team will have to observe applicable precautions during time of emergency first aid.

4.6 Emergency Survey.

4.6.1 Scope. The radioactive source is now confined by having closed windows and doors, having shut off the ventilating/heating system, and having sealed other openings with wide masking tape or with adhesive tape and heavy wrapping paper. Entrance to the sealed-off area shall be prohibited. No immediate attempt shall be made to decontaminate areas at this time. The purpose of this initial emergency survey is to determine the extent and magnitude of airborne and surface contamination in those areas of specific interest outside of the sealed area. Such areas to survey include the evacuation assembly areas and any other suspected areas which are occupied by persons--off-site areas included. Persons carrying out this survey shall be equipped with appropriate type protective clothing and respiratory equipment.

4.6.2 Procedures.

(a) Immediately survey all occupied areas concerned for airborne and surface plutonium contamination. Alpha survey instruments

are required for surface contamination surveys. Air samples should be collected on a filter paper with a high volume air sampler. Observe radiation control principles and be alert to potential hazards other than radiation.

(b) Take necessary actions indicated by the results of the survey, including evacuation of personnel to an alternate assembly area, sealing off additional areas, and establishing radiological controls.

(c) Assay the airborne particulate samples for alpha activity as soon as possible using appropriate type counter and analytical techniques.

Air samples collected on filter paper will contain the decay products of naturally occurring radon and thoron. These daughter products are frequently present in sufficient quantities to mask the long lived activity being investigated. For the purpose of this survey, however, an immediate count should be made of the alpha activity on the collected samples. The results of the immediate count should be considered qualitative and conservative (i.e., on the safe side) when used to define the initial conditions.

Since the longest lived naturally occurring contaminant collected on the filters is ThB (^{212}Pb) with a half-life of 10.64-hours, the long lived activity can be obtained by measurement after the ThB has decayed or by taking two measurements spaced in time adequate for significant decay of the ThB. The true count rate of the long lived alpha emitter is then computed by using the following equation:

$$A = \frac{N_2 - N_1 e^{-\lambda \Delta t}}{1 - e^{-\lambda \Delta t}}$$

where:

A	=	counting rate of long lived alpha emitter
N_1	=	counting rate of sample 4 to 6 hours after sample is taken (to allow for decay of radon daughters)
λ	=	decay constant for ThB (^{212}Pb) = 6.5×10^{-2} hr^{-1}
Δt	=	time interval in hours between measurements
N_2	=	counting rate of sample 10 to 24 hours after sample is taken.

Compute the results in terms of μCi/cc of air and compare them with the applicable limits for airborne plutonium. If these concentrations exceed the MPC, corrective action should be instituted and respiratory protection provided in accordance with Section 2.3.3.

(d) Enter results of survey immediately on area maps or in a log noting the date, time, instrument, reading, area, and any pertinent remarks. A complete diary of the entire accident should be kept with the events of the day entered as they occur.

5. TRANSPORATION -- IMMEDIATE EMERGENCY PROCEDURES

Following are the immediate emergency procedures to be followed in the event of a radiation accident involving the fuel material capsule of a SNAP-27 and occurring during its transporation by air, land, or sea.

5.1 Determination of the Existence of a Radiation Accident.

For the purposes of this manual, any one of the occurrences listed in paragraph 4.1.1 shall be considered indicative of the existence of a

radiation accident. Failure of the transporting vehicle to reach its destination within the scheduled arrival period is treated below in Section 6, "Lost Capsule -- Detection and Recovery."

5.2 Immediate Action.

5.2.1 Action by First Observers. Following are actions to be taken by first observers at the accident scene, pending arrival of authorities:

(a) Major consideration at the scene of the accident, commensurate with personnel safety, shall be the saving of any personnel involved in the accident. These personnel may be aircraft pilot and crew, truck drivers, escorts, etc. Except for the saving of lives, keep away from the wreckage, material, or container involved. Remain upwind and uphill; and stay out of smoke, mist, dust, or other visible substances that are airborne.

(b) Report the accident as quickly as possible to the nearest local authority (police, fire, health, etc.) and notify the nearest AEC or military installation. Supply sufficient information so authority can take proper action. Give location of accident in sufficient detail so that it can be easily located. Briefly describe kind of accident, if there are any personnel casualties, and if it is suspected (or known) that radioactive material has escaped from the capsule. It is important to distinguish between information suspected and information known from actual observation. Fully identifiy self and state how you can be contacted. As appropriate, give identification and telephone number of authority who can be contacted at or near accident scene.

(c) Organize witnesses to warn sightseers to stay well away 500 yards or more--and upwind from the accident.

(d) Stay out of smoke, mist, dust, or other visible substances that are airborne. If there is a fire, stay out of the smoke except for the purpose of rescuing people. Always approach the accident scene from upwind and from uphill, if possible, and if the smoke cannot be avoided, use any immediately available method to prevent smoke from affecting your eyes and throat. Although there may be a toxic, caustic, or radioactive material in the smoke, short excursions into the smoke are not likely to have serious effects on the person exposed. If it has proved necessary to enter the smoke from a fire, report subsequently to the AEC or military emergency team for radiological monitoring and possible decontamination.

(e) Do not try to fight a fire--except under the direction of fire fighting personnel.

(f) People who have been in the area affected by the accident may have become contaminated and should be held in some nearby place for examination by the AEC or military emergency team before they are released. If they will not stay, obtain their names, addresses, telephone numbers, and occupations and give the information to the emergency personnel or local authorities when they arrive.

(g) Do not permit people to handle debris or take souvenirs from the accident scene.

(h) Do not permit entry into the accident area by unauthorized persons. Turn over control at the accident scene only to properly identified authorities.

NOTE: Small, wallet-size cards bearing a summary of these instructions may be provided to transporting personnel for carrying with them. Extra cards may be distributed to persons at accident scene, as appropriate. See Appendix B.

5.2.2 Action by Fire, Police and Emergency Services Pending Arrival of Special Teams. Following are actions to be taken by fire, police, and emergency services pending arrival of special, radiological emergency teams:

(a) Rescue and assist injured personnel as practicable.

(b) Notify nearest military installation or Atomic Energy Commission office of the accident (and of the type of vehicle involved) and give them any information available as to whether the radioactive material is, or could be, involved. They will, in turn, dispatch their own men to the scene of the accident and notify the Joint Nuclear Accident Coordinating Center at Albuquerque, New Mexico, as appropriate. Pending arrival of the special team, the installation called will provide advice regarding the incident.

(c) Clear area of all non-essential personnel to a distance of at least 500 yards or more. Maintain exclusion of the area until arrival of the radiological assistance team.

(d) If there is a fire and if the ground shipping container is not engulfed in flames, attempt to extinguish fire in the normal manner (from upwind side only). Keep ground shipping container cool by application of water spray. Stop spraying of water, however, if it accelerates burning. Do not use foam on ground shipping container where it will act to trap heat inside. Foam is an insulator and may act to retain sufficient heat to cause rupture of the capsule and subsequent release of radioactive material.

(e) If the ground shipping container is engulfed in flames, clear all personnel out of area, to at least 500 yards. Do not attempt to fight fires.

(f) Avoid smoke and clear downwind areas; but if dense smoke must be encountered for long periods of time, dust filtering masks, goggles, or breathing apparatus should be used. The nonavailability of these items should not hold up rescue efforts. Always approach the accident scene from upwind and from uphill, if possible, and if the smoke cannot be avoided, use any immediately available method to prevent smoke from affecting your eyes and throat. Personnel who have entered the accident area must report to the special team for monitoring and, if necessary, decontamination after initial action is over.

(g) After the burning has subsided, and if the special team has not arrived:

(1) Do not attempt to clean up the scene of the accident.

(2) Do not permit re-entry into scene of accident by anyone. Rope off scene in a semi-permanent manner.

(3) Organize all personnel that may have been contaminated to preclude the spreading of plutonium about the environs and so that they can be monitored by the special team on arrival.

(h) Follow advice of the special radiological team upon its arrival.

5.3 Notification of Authorities.

5.3.1 Shipper (Custodial Activity). When a radiation accident has occurred enroute, the chief transporting person, or the official escort, shall as promptly as possible notify by "collect" telephone call the specific official(s) of the shipper (custodial activity) listed in the written instructions furnished to him. The caller should state the nature of the accident, the exact location of the accident scene, how he may be contacted by telephone, and any other pertinent details.

NOTE: Similarly, this same official is to be notified in advance, if an unavoidable delay (not involving a radiation accident) will prevent arrival of the shipment at its destination point within the scheduled period.

5.3.2 Local and State Agencies. See paragraph 4.4.2 above.

5.3.3 Atomic Energy Commission and Others. Immediately upon notification of the occurrence of a radiation accident, the designated official of the custodial activity shall notify other specified officials of that activity and he shall also notify by telephone and telegraph the appropriate AEC Regional Compliance Office listed in Appendix A. The appropriate representative of the activity to which the shipment was being sent should also be notified by telephone.

On the basis of requirements foreseen, the designated official of the custodial activity shall promptly dispatch appropriate radiological assistance to the scene of the accident. If the need exists for outside assistance in the form of advice or of equipment, materials, special services, or trained men, obtain the required assistance in accordance with procedures in Section 7 below,

and also in accordance with any specific instructions obtained from the AEC Regional Compliance Office notified of the accident. A call for radiological assistance should also be made to the activity to which the shipment was being sent, especially if the activity has such capabilities and is located near the accident scene.

5.3.4 News Media. See paragraph 4.4.4 above.

6. LOST CAPSULE -- DETECTION AND RECOVERY

As soon as it is known, or reasonably presumed, that a SNAP-27 fuel capsule has been lost, the cognizant activity shall carry out the following actions:

(a) Notify the appropriate AEC Regional Compliance Office, listed in Appendix A.

(b) Formulate a plan and prepare to conduct a systematic and thorough search, using visual and appropriate instrumental means. As appropriate, assistance in the form of advice, instruments, services, and trained personnel may be requested from the Radiological Emergency Assistance Organization. See Section 7 below.

(c) If the capsule has been lost as a consequence of an actual, or reasonably presumed, crash of an airplane transporting it; immediately request assistance for detection and recovery from the Radiological Assistance Organization. For emergency procedures at the accident scene, see Section 5 above.

(d) Detailed procedures for the detection and recovery of a lost SNAP-27 capsule are contained in a separate manual.

7. RADIOLOGICAL EMERGENCY ASSISTANCE

7.1 Sources and Types of Assistance.

The Atomic Energy Commission and the Department of Defense are the primary sources of radiological emergency assistance. Emergency teams are available at thirty-nine facilities of the AEC and at more than 330 military installations of the DOD. The considerable resources of AEC and DOD are further supplemented by those of ten other Federal agencies which participate in the Interagency Radiological Assistance Plan. These agencies are listed in Appendix C. Under certain circumstances a request for assistance may be amply met by simply giving proper advice. To the extent considered appropriate, however, radiological assistance from the AEC may include: radiological monitoring; emergency sampling and radiation monitoring of materials including air, food, and water; radiological decontamination advice and emergency assistance; medical advice on the handling and treatment of people exposed to radiation or radioactive material; special laboratory services needed for the evaluation of personnel radiation exposure and environmental radiological hazards; and specialists in radiation accident operations. If the emergency situation warrants it, the AEC, from its laboratories and production plants, could bring a considerable amount of additional resources to the task of protecting health and safety.

7.2 Call for Radiological Emergency Assistance.

7.2.1 Atomic Energy Commission. To request radiological assistance, call the appropriate AEC Regional Office for Radiological Assistance listed in Appendix D. The telephone number listed for each of the eight regional offices is a special one to receive requests for radiological emergency assistance, at any hour of any day.

7.2.2 Department of Defense. Even though a request for radiological assistance has been made to the AEC, if the situation warrants it and assistance may be obtained quicker from a military installation because of its proximity to the accident scene, make an immediate request for such assistance from this installation. A radiological assistance team from the military installation, properly equipped to handle the situation, will arrive promptly and, with assistance of local police (as applicable), will assume command of the situation until arrival of the AEC team.

7.3 AEC Team Functions.

When the AEC team arrives at the accident scene, its functions, in general, will be to:

(a) Monitor for radiation to evaluate the hazard and determine the emergency measures needed to protect health and safety.

(b) Coordinate the emergency operations in cooperation with local authorities at the scene.

(c) Provide information for the public.

(d) Provide emergency medical advice and, if necessary to save life or minimize injury, carry out emergency measures to assist people who may be injured as a result of the accident.

However, when a more appropriate authority arrives at the scene, the AEC team captain will relinquish control of the emergency operations to this authority.

8. POST-EMERGENCY FUNCTIONS

8.1 Responsibility.

When the emergency period is over, the agency responsible for the radioactive material, the site, or the facilities involved would be expected to provide for the necessary post-emergency decontamination and recovery operation, unless this responsibility has been accepted by someone else. Atomic Energy Commission radiological emergency assistance, however, will not be withdrawn from the scene until appropriate steps have been taken to give reasonable assurance that the public health and safety will be protected from any remaining potential hazards.

8.2 Contamination Control.

Following are procedures which are to be applied as appropriate, to prevent unnecessary exposures and dispersal of the contaminant.

(a) The contamination area shall be duly secured, as appropriate, by such means as physical barriers, posted radiation signs, guards, etc., to insure against unauthorized entry.

(b) Contamination control point(s) shall be established as required. Entry to and exit from the contamination area shall be only via such points.

(c) Persons authorized to enter the contamination area shall be appropriately fitted with complete protective respiratory equipment and with protective (anti-contamination) clothing including head cover, shoe covers, gloves, and coveralls.

(d) Upon exiting from the contamination area, persons shall discard their protective equipment and clothing, be checked for contamination and decontaminated if required. Contaminated items shall be handled accordingly.

(e) Any item removed from the contamination area shall be treated as being contaminated -- unless proved otherwise by an actual check at the control point.

8.3 Recovery of Radioactive Material.

The radioactive material, or the recoverable bulk of it, will be recovered in accordance with specific instructions contained in a separate SNAP-27 manual. This function, in essence, constitutes the first phase of the decontamination procedures.

8.4 Decontamination of Area and Equipment.

(a) The first phase of decontamination is the recovery operation indicated in paragraph 8.3 above.

(b) Subsequent decontamination operations shall be well-planned beforehand, with the same care as used in bacteriological handling of virulent organisms. The decontamination method(s), equipment, materials, and supplies shall be chosen in accordance with the clean-up task at hand. The appropriate types and quantities of protective respiratory equipment, protective clothing, radiation survey and monitoring instrumentation, waste containers accessory equipment, and supplies, etc., must be at hand. Additionally, appropriate provisions must be made for the form, volume, and radioactivity of the wastes expected. As applicable, specific advice should be obtained from the AEC team at the accident scene, or from the

appropriate AEC Regional Office for Radiological Assistance, listed in Appendix D.

(c) Persons assigned to decontamination operations shall have had prior training and experience, or else they shall be fully briefed before hand on all particulars involved and work under the direct supervision of a qualified person.

(d) Fans or ventilating systems shall not be turned on to try and blow away the contamination. Such an action will only result in dispersal of the contaminant to others areas, causing additional and perhaps more serious radiological problems than the one at hand.

8.5 Radioactive Waste.

8.5.1 Packaged Radioactive Waste. Radioactive waste resulting from the decontamination operations shall be packaged and labelled in accordance with applicable regulations of the Interstate Commerce Commission. As arranged beforehand, such packages shall be transferred to an appropriately AEC-licensed facility, for either ultimate disposal by ground burial or for recovery of the plutonium, as applicable. Transportation of the packages shall be made in conformance with regulations of the applicable regulatory agency such as the AEC and ICC (e.g. Interstate Commerce Commission).

8.5.2 Effluents. Radioactive effluents resulting from decontamination operations, in the form of gases or liquids, discharged to the environment (or via the sanitary sewerage system) shall be controlled in accordance with applicable provisions of Title 10, Code of Federal Regulations, Part 20 (10 CFR 20). Likewise, requirements for records, reports, and notifications concerning such effluents shall be as specified in 10 CFR 20.

8.6 Follow-Up Bio-Medical Functions.

Medical care of injured persons shall be carried out as determined by responsible medical authorities. On the basis of expert advice, applicable therapeutic means may be taken to hasten elimination of plutonium from the body. As advised by experts consulted, continue to collect samples of excreta (urine, feces) from exposed persons and to have them radioassayed. Likewise, whole-body counts may be performed to determine the lung- or body-burden.

9. RECORDS

As indicated above, written records shall be maintained of all findings, reports, and other items pertinent to the radiation accident. These records should be supplemented, if applicable, by such items as photographs, sketches, etc. Records for the post-emergency period shall be as specified in Volume I, and in Title 10 Code of Federal Regulations, Part 20 (10 CFR 20). Complete and accurate documentation of the emergency conditions and actions taken should be an invaluable aid in determining the consequences of a future similar occurrence and in the preparation of emergency procedures for such incidents.

BIBLIOGRAPHY

1. Title 10, Code of Federal Regulations:
   - (a) Part 20 (10 CFR 20), Standards for Protection Against Radiation.
   - (b) Part 30 (10 CFR 30), Licensing of By-Product Material.
   - (c) Part 70 (10 CFR 70), Special Nuclear Material.
   - (d) Part 71 (10 CFR 71), Packaging of Radioactive Material for Transport.

2. Handbook of Federal Regulations Applying to Transportation of Radioactive Materials. United States Atomic Energy Commission; Washington, D. C., May 1958.

3. ICRP Publication 5, Recommendations of the International Commission on Radiological Protection (As Amended 1959 and Revised 1962), Pergamon Press, New York, (1964).

4. Report to the Medical Research Council by its Committee on Protection Against Ionizing Radiations, "Maximum Permissible Dietary Contamination after the Accidental Release of Radioactive Material from a Nuclear Reactor", Brit. Med. Jl., I, 967-969, (1959).

5. Report to the Medical Research Council by its Committee on Protection Against Ionizing Radiations; "Maximum Permissible Contamination of Respirable Air After an Accidental Release of Radioiodine, Radiostrontium, and Cesium-137", Brit. Med. Jl., 3, 576-579, (1961).

6. Federal Radiation Council Staff Report No. 7, "Background Material for the Development of Radiation Protection Standards -- Protective Action Guides for Strontium-89, Strontium-90, and Cesium-137," Supt. of Doc., GPO, (May 1965).

7. Morgan, K. Z., Snyder, W. S., and Ford, M., "Maximum Permissible Concentration of Radioisotopes in Air and Water for Short-Period Exposure", Proceedings of the International Conf. on the Peaceful Uses of Atomic Energy, 13, 139-158, (1955).

8. British Medical Research Council, "The Hazards to Man of Nuclear and Allied Radiations", Report Cmnd. 1225, Her Majesty's Stationery Office, London, (Dec. 1960).

9. Medical Aspects of Radiation Accidents, A Handbook for Physicians, Health Physicists, and Industrial Hygienists. Eugene L. Saenger, Editor. United States Atomic Energy Commission, Feb. 1963. For sale by the Superintendent of Documents, U.S. Government Printing Office; Washington, D.C. -- Price $1.75.

10. Radiation Accidents and Emergencies in Medicine, Research and Industry. Edited by L. H. Lanzl, John H. Pingel, and J. H. Rust. Charles C. Thomas, Publisher; Springfield, Illinois, 1965.

11. Radiological Emergency Procedures for the Non-Specialist. Prepared for the Interagency Committee on Radiological Assistance, by K. F. Oerlein, (May 1964). For sale by the Superintendent of Documents, U. S. Government Printing Office; Washington, D. C. -- Price .35 cents.

12. Radiation Safety and Control, Pocket Manual, Oak Ridge National Laboratory, Oak Ridge, Tenn., June 1961.

13. Mishima, J., A Review of Research on Plutonium Releases during Overheating and Fires, General Electric, HW-83668 (August, 1964).

14. H. H. Olafson and K. H. Larson, Plutonium, Its Biology and Environmental Persistence, UCLA-501, University of Calif., Los Angeles (December, 1961).

15. S. E. Thompson, Effective Half-Life of Fallout Radionuclides on Plants with Special Emphasis on Iodine - 131, Page 2, Univ. of Calif., UCRL-12388, (January 29, 1965).

APPENDICES

APPENDIX A

UNITED STATES ATOMIC ENERGY COMMISSION COMPLIANCE OFFICES*

	Region	Address	Telephone
I	Connecticut, Delaware, District of Columbia, Maine, Maryland, Massachusetts, New Hampshire, New Jersey, New York, Pennsylvania, Rhode Island, and Vermont	Region I Division of Compliance USAEC 376 Hudson Street New York, N.Y. 10014	(212) 989-1000 Ext. 281
II	Alabama, Arkansas, Florida, Georgia, Kentucky, Louisiana, Mississippi, North Carolina, Panama Canal Zone, Puerto Rico, South Carolina, Tennessee, Virginia, Virgin Islands, and West Virginia	Region II Division of Compliance USAEC 50 Seventh Street, N.E. Atlanta, Georgia 30323	(404) 526-5791
III	Illinois, Indiana, Iowa, Michigan, Minnesota, Missouri, Ohio, and Wisconsin	Region III Division of Compliance USAEC Suite 410 Oakbrook Professional Building Oakbrook, Illinois	(312) 654-1680 (nights and holidays: 257-7711, Ext. 541)
IV	Colorado, Idaho, Kansas, Montana, Nebraska, New Mexico, North Dakota, Oklahoma, South Dakota, Texas, Utah, and Wyoming	Region IV Division of Compliance USAEC 10395 West Colfax Ave. Denver, Colorado 80215	(303) 297-4211 (nights and holidays: 237-5095)
V	Alaska, Arizona, California, Hawaii, Nevada, Oregon, Washington and U. S. Territories and Possessions in the Pacific	Region V Division of Compliance USAEC 2111 Bancroft Way Berkeley, California	(415) 841-5620

* Appendix D of 10CFR20

APPENDIX B

CARDS CONTAINING RADIOLOGICAL EMERGENCY PROCEDURES

As indicated in Section 5.2.1, small (wallet-size) cards bearing a summary of the immediate emergency procedures should be provided to transporting personnel for carrying with them. These cards may be distributed to persons at an accident scene, as appropriate. Below is a suggested format for such a card. Specific information left blank is to be filled out by the custodial activity holding responsibility for the shipment.

IMMEDIATE EMERGENCY PROCEDURES

1. Keep away from the immediate accident scene, except to rescue people.
2. Report accident immediately to nearest military or AEC installation; to local police or fire department; and to custodial activity. See Reverse side of card.
3. Keep sightseers well away - 500 yards or more - and upwind from accident.
4. DO NOT FIGHT FIRES except as directed by firemen.
5. Stay out of smoke, dust, or mists resulting from accident.
6. Hold for radiation monitoring and/or obtain names, addresses and phone numbers of all persons who were in the affected area.
7. Do not take or permit the taking of souvenirs.
8. Turn over control only to properly identified authories.

- See Reverse Side -

IN THE EVENT OF A RADIOLOGICAL EMERGENCY

CONTACT:

A. Local Police or Fire Department.

B. Local AEC Installation: _____

C. Local Military Installation: _____

D. Custodial Activity: Mr. _____

At: _____

Tel. No's: _____

RADIOACTIVE MATERIAL CONCERNED: _____ (No.) Capsule(s)

of radioisotope thermoelectric generator SNAP-27, each containing Plutonium-238 (an alpha emitter).

- See Reverse Side -