431.02
01/30/2003
Rev. 11

ENGINEERING DESIGN FILE

EDF No.: 5465 EDF Rev. No.: 0 Project File No.: N/A

1. Title: ATR Water Power Calculator Instrument Uncertainty Analysis

2. Index Codes:
Building/Type TRA-670 SSC ID WPC Site Area RTC

3. NPH Performance Category: _____ or ☒ N/A

4. EDF Safety Category: SS or ☐ N/A SCC Safety Category: SC or ☐ N/A

5. Summary:
The purpose of this calculation is to determine the demonstrated accuracy of the instrumentation covered by this calculation for the development of the limiting control settings and operational setpoints.

6. Review (R) and Approval (A) and Acceptance (Ac) Signatures:
(See instructions for definitions of terms and significance of signatures.)

	R/A	Typed Name/Organization	Signature	Date
Performer/ Author	N/A	M. S. Pickar	Michael S Pickar	4/14/05
Technical Checker	R	G. A. Washburn	G A Washburn per tele con PVSB	9/7/2005
Independent Peer Reviewer (if applicable)	R	N/A		
Approver	A	D. J. Schoonen	D J Schoonen	9/29/05
Requestor (if applicable)	Ac	R. T. McCracken	R T McCracken	4-18-06
Doc. Control	AC	T. McDermott	Tracy McDermott	4/26/06

7. Distribution: (Name and Mail Stop) Reactor Programs Document Management (J. M. Lewis) (original +1), J. C. Chapman, MC 7136, D. E. Hale, MS 7136, R. T. McCracken, MS 7136, P. F. Nawrocki, MS 7129, D. J. Schoonen, MS 7129, SORC MS 7114

8. Does document contain sensitive unclassified information? ☐ Yes ☒ No
If Yes, what category:

9. Can document be externally distributed? ☐ Yes ☒ No

10. Uniform File Code: 286 Disposition Authority: A17-31-a-1
Record Retention Period: Until dismantlement or disposal of facility, equipment, system, or process or when superceded or obsolete, whichever is earlier.

11. For QA Records Classification Only: ☒ Lifetime ☐ Nonpermanent ☐ Permanent
Item and activity to which the QA Record apply:

12. NRC related? ☐ Yes ☒ No

ENGINEERING DESIGN FILE

EDF No.: 5465 EDF Rev. No.: 0 Project File No.: N/A

1. Title: ATR Water Power Calculator Instrument Uncertainty Analysis		
2. Index Codes:		
Building/Type TRA-670	SSC ID WPC	Site Area RTC
13. Registered Professional Engineer's Stamp (if required) N/A		

Table of Contents

Section	Description	Sheet No./	No. of Sheets
---	Cover Sheet	1	2
---	Table of Contents	3	2
1.0	Purpose	5	1
2.0	Assumptions / Requirements	5	
3.0	Definitions and Abbreviations	6	3
4.0	References	9	3
5.0	Design Input Data	12	63
6.0	Computations and Analyses	75	31
7.0	Summary of Results	106	34
8.0	Conclusions	140	1

Appendixes

A	Foxboro Product Specifications, PSS-2A-1A3 E, "823DP Intelligent d/p Cell Transmitter"	8
B	Excerpt from Azonix manual for RT41 Temperature Input Card	1
C	Azonix General Purpose Input/Output Board GIO Series Data Sheet	2
D	Neff Instrument Corp. System 470 Function Card Specs	10
E	Email from Lou Lang of Neff Instrument Corp. to George Washburn of Bechtel dated 10/12/2004, "Specs from Neff"	6
F	Acopian Power supply data sheet	1
G	Wallace & Tiernan Series Digital Pressure Gauge data sheet	1
H	"Features and Specifications, Molytek 2702 and 3702 Recorders," Rev. 03302004	3
I	Fluke 701/702 Documenting Process Calibrator Data Sheet	1
J	Email from Tony Wilson of INEEL to George Washburn of Bechtel dated 12/20/2004, "WPC"	2
K	Azonix DC Voltage and DC Current Input Channels (PAL Series) Data Sheet	1

Table of Contents(cont.)

Appendixes(cont.)		No. of Sheets
L	Vishay Bulk Metal Foil Technology High-Performance Aerospace and Instrumentation Resistors	1
M	ATR Surveillance Data Report, dated 01-04-05, Cycle 133B-1, Page 11, "REACTOR THERMAL HISTORY (MAIN WPC)"	1
N	"ATR WPC Sensitivity Iterations"	2
P	RTD Tables, ""Supplement 2 100Ω Platinum RTD-0.00390 Coefficient, Temperature in °F	2

Total Number Of Sheets = 182

1.0 Purpose:

The purpose of this calculation is to determine the demonstrated accuracy of the instrumentation covered by this calculation for the development of the limiting conditions of operations.

2.0 Assumptions / Requirements:

2.1 Assumptions:

2.1.1 The only uncertainties associated with the RDAS and WPC computers are those due to the input/output cards and the reading uncertainty. No significant uncertainty is introduced by the calculations within the RDAS and WPC computers.

2.1.2

2.2 Requirements:

2.2.1 NONE

3.0 Definitions and Abbreviations:

Definitions and abbreviations used in this calculation are as follows:

Ab - Acceptance Band (the range of values around the correct value determined to be acceptable without recalibration)

Aa - Accident Accuracy

Aas - Combined Accident and Seismic Accuracy

Adbe - Design Basis Event Accuracy

AL - Analytical Limit

As - Post Seismic Accuracy

ATE - Temperature Effect at Accident Conditions

CS - Calibration Span

DE - Drift Inaccuracy

DMM - Digital Multimeter

e - Normal Accuracy (the total error of the instrument; it includes measurable and unmeasurable uncertainties for the required environmental and process conditions)

e_m - Normal Measurable Accuracy (the total measurable error of the instrument in its normal operating environment)

FS - Full Scale

Hc - Head Correction of pressure exerted by the column of water in the tubing between the sensing point and transmitter

ICR - Input Measuring and Test Equipment Reading Inaccuracy

ICT - Input Measuring and Test Equipment Calibration Inaccuracy

INDR - Indicator Reading Error

3.0 Definitions and Abbreviations (Continued):

LCO - Limiting Condition of operation. Technical Specification term.

LAb - Loop Acceptance Band (the range of values around the correct value determined to be acceptable without recalibration)

LOCA - Loss of Coolant Accident

M - Margin (The Difference Between the Actual Instrument Setpoint and the Calculated Setpoint)

M&TE - Measuring and Test Equipment

N/A - Not Applicable

N/R - Not Required

NTE - Temperature Effect in the Maximum/Minimum Abnormal Temperature Ranges

OCR - Output Measuring and Test Equipment Reading Inaccuracy

OCT - Output Measuring and Test Equipment Calibration Inaccuracy

PRCS - Process Error

PSE - Inaccuracy Due to Power Supply Variations

RAD - Inaccuracy due to Accident Radiation exposure

RDAS ATR Reactor Data Acquisition System

Re - Repeatability or Reference Accuracy, as applicable

RND - Inaccuracy Due to Normal Radiation Dose Between Calibration

SE - Inaccuracy Following a Seismic Event

SEC - Span Error Correction Uncertainty

SPE - Static Pressure Effect Due to Effects of Operating Pressure

3.0 Definitions and Abbreviations (Continued):

TLU - Total Loop Normal Accuracy (the total error of the loop; it includes measurable and unmeasurable uncertainties for the required environmental and process conditions)

TLU_m - Total Loop Normal Measurable Accuracy (the total measurable error of the loop in its normal operating environment)

TSP - Trip Setpoint

URL - Upper Range Limit

VE - Vibration Effect

WL - Waterleg Uncertainty

4.0 References:

Ref#	App#	Reference
1		ANSI/ISA-67.04.01-2000, "Setpoints for Nuclear Safety-Related Instrumentation."
2		ISA-RP67.04.02-2000, "Methodologies for the Determination of Setpoints for Nuclear Safety-Related Instrumentation."
3		Procedure MCP-2374, Rev. 10, "Analyses and Calculations"
4		Upgraded Final Safety Analysis Report, Chapter 7.6.5 and Tables 7.2-2 and 15.0-2
5		Technical Safety Requirements, Section 3.3.1.1
6		Drawing 414577,sheets 3 through 7, "Flow Diagram - Primary Coolant System"
7		Drawing 427097, Rev.C, "ATR Water Power Calculator Channel 1 & 2 Inlet Temperature Installation Wiring Diagram"
8		Drawing 427098, Rev.B, "ATR Water Power Calculator Channel 3 & 4 Inlet Temperature Installation Wiring Diagram"
9		Drawing 427099, Rev.B, "ATR Water Power Calculator Quadrant 1 & 2 Outlet Temperature Installation Wiring Diagram"
10		Drawing 427100, Rev.B, "ATR Water Power Calculator Quadrant 3 & 4 Outlet Temperature Installation Wiring Diagram"
11		Drawing 427101, Rev.C, "ATR Water Power Calculator Reactor Total Outlet Temperature Installation Wiring Diagram"
12		Drawing 427102, Rev.E, "ATR Water Power Calculator Quadrant 1 & 2 Flow Installation Wiring Diagram"
13		Drawing 427103, Rev.E, "ATR Water Power Calculator Quadrant 3 & 4 Flow Installation Wiring Diagram"

4.0 References (Continued):

Ref#	App#	Reference
14		Drawing 427104, Rev.6, "ATR Water Power Calculator WPC#1 & WPC#2 - Water Power Installation Wiring Diagram"
15		Drawing 427105, Rev.A, "ATR Water Power Calculator WPC#1 & WPC#2 - Differential Temp. Installation Wiring Diagram"
16		Drawing 427106, Rev.4, "ATR Water Power Calculator Total Flow Installation Wiring Diagram"
17		Procedure DOP 2.7.40, Rev. 14,"ATR Water Power Calibration Check and Calibration WPC-1 and WPC-2"
18		Procedure DOP 2.7.42, Rev. 14,"Primary Power Calculation System Recorder and Flow Transmitter Calibration"
19		EDF TRA-ATR-1212, "ATR Flow Measurements Orifice Uncertainty Study and Analysis
20		EDF TRA-ATR-1236, "Technical Bases for Updated ATR Initial Conditions Limiting Conditions for Operation for Action Levels and Action Completion Times"
21	A	Foxboro Product Specifications, PSS-2A-1A3 E, "823DP Intelligent d/p Cell Transmitter"
22	B	Excerpt from Azonix manual for RT41 Temperature Input Card
23	C	Azonix General Purpose Input/Output Board GIO Series Data Sheet
24	D	Neff Instrument, "System 470 Function Card Specs"
25	E	Email from Lou Lang of Neff Instrument Corp. to George Washburn of Bechtel dated 10/12/2004, "Specs from Neff"
26		Drawing 446882, Sh. 1, 2 & 3,"RDAS Analog Signal Terminations"

4.0 References (Continued):

Ref#	App#	Reference
27	F	Acopian Power supply data sheet
28	G	Wallace & Tiernan Series Digital Pressure Gauge data sheet
29	H	"Features and Specifications, Molytek 2702 and 3702 Recorders," Rev. 03302004
30	I	Fluke 701/702 Documenting Process Calibrator Data Sheet
31		Drawing 128489, Sh. 1 & 2, Rev. F, "ATR PPS Temperature Element and Root Valve (Pressure) Arrangement"
32		Drawing 121203, Rev. 16, "Process Control-Instrumentation Mechanical Layout-Sheet 2"
33		Drawing 120893, Rev. 21, "Primary Coolant System Piping-Sections"
34		Drawing 433700, Rev. B, "ATR Process Control Main Floor Instrument Locations"
35	J	Email from Tony Wilson of INEEL to George Washburn of Bechtel dated 12/20/2004, "WPC"
36		Drawing 433701, Rev. C, "ATR Process Control First Basement Instrument Locations"
37	K	Azonix DC Voltage and DC Current Input Channels (PAL Series) Data Sheet
38	L	Vishay Bulk Metal Foil Technology High-Performance Aerospace and Instrumentation Resistors
39	M	ATR Surveillance Data Report, dated 01-04-05, Cycle 133B-1, Page 11, "REACTOR THERMAL HISTORY (MAIN WPC)"
40	N	"ATR WPC Sensitivity Iterations"
41	P	RTD Tables, "Supplement 2 100Ω Platinum RTD-0.00390 Coefficient, Temperature in °F

5.0 Design Input Data:

5.1 Loop Function:

The function of water power calculator system is to provide the total reactor power and the power of the four quadrants to the RDAS. This input is then used for the thermal power constraint of the reactor lobe powers.

5.2 Loop Component List:

Loop Identifier: WPC #1, #2

Locations given here are to provide a general location within the plant and are not intended to provide an exact position.

Device ID#	Panel	Ref.	El.	Ref.	Coord	Ref.
TE-1-1A	Local	9	60'	31	D5	31
TE-1-2A	Local	9	60'	31	D5	31
TE-1-3A	Local	10	60'	31	D5	31
TE-1-4A	Local	10	60'	31	D5	31
TE-1-5A	Local	11	79'	33	J6	33
TE-1-1B	Local	7	60'	31	D5	31
TE-1-2B	Local	7	60'	31	D5	31
TE-1-3B	Local	8	60'	31	E5	31
TE-1-4B	Local	8	60'	31	E5	31
FE-1-1	Local	32	51' 3"	32	D4	32
FE-1-2	Local	32	51' 3"	32	D4	32
FE-1-3	Local	32	51' 3"	32	D6	32
FE-1-4	Local	32	51' 3"	32	D6	32
FT-1-1	Local	12	42'	32	C5	32

5.0 Design Input Data:
5.2 Loop Component List (cont.):

Device ID#	Panel	Ref.	El.	Ref.	Coord	Ref.
FT-1-2	Local	12	42'	32	C5	32
FT-1-3	Local	13	42'	32	C5	32
FT-1-4	Local	13	42'	32	C5	32
FRS-1-1	R1	12	98'	34	D2	34
FRS-1-2	R1	12	98'	34	D2	34
FRS-1-3	R1	13	98'	34	D2	34
FRS-1-4	R1	13	98'	34	D2	34
FRS-1-5A	R1	12	98'	34	D2	34
FRS-1-A	R1	12	98'	34	D2	34
FRS-1-B	R1	12	98'	34	D2	34
FRS-1-C	R1	13	98'	34	D2	34
FRS-1-D	R1	13	98'	34	D2	34
FRS-1-5	R1	12	98'	34	D2	34
TRS-1-11	R1	9	98'	34	D2	34
TRS-1-12	R1	9	98'	34	D2	34
TRS-1-13	R1	10	98'	34	D2	34
TRS-1-14	R1	10	98'	34	D2	34
TRS-1-21	R1	9	98'	34	D2	34
TRS-1-22	R1	9	98'	34	D2	34
TRS-1-23	R1	10	98'	34	D2	34
TRS-1-24	R1	10	98'	34	D2	34

5.0 Design Input Data:
5.2 Loop Component List (cont.):

Device ID#	Panel	Ref.	El.	Ref.	Coord	Ref.
TRS-1-17	R1	11	98'	34	D2	34
TRS-1-18	R1	7	98'	34	D2	34
TRS-1-20	R1	7	98'	34	D2	34
TRS-1-27	R1	11	98'	34	D2	34
WRS-1-1	R1	14	98'	34	D2	34
WRS-1-2	R1	14	98'	34	D2	34
WRS-1-3	R1	14	98'	34	D2	34
WRS-1-4	R1	14	98'	34	D2	34
WRS-1-5A	R1	14	98'	34	D2	34
WRS-1-A	R1	14	98'	34	D2	34
WRS-1-B	R1	14	98'	34	D2	34
WRS-1-C	R1	14	98'	34	D2	34
WRS-1-D	R1	14	98'	34	D2	34
WRS-1-5	R1	14	98'	34	D2	34
DTRS-1-1	R1	15	98'	34	D2	34
DTRS-1-2	R1	15	98'	34	D2	34
DTRS-1-3	R1	15	98'	34	D2	34
DTRS-1-4	R1	15	98'	34	D2	34
DTRS-1-5	R1	15	98'	34	D2	34
DTRS-1-A	R1	15	98'	34	D2	34
DTRS-1-B	R1	15	98'	34	D2	34

5.0 Design Input Data:
5.2 Loop Component List (cont.):

Device ID#	Panel	Ref.	El.	Ref.	Coord	Ref.
DTRS-1-C	R1	15	98′	34	D2	34
DTRS-1-D	R1	15	98′	34	D2	34
DTRS-1-E	R1	15	98′	34	D2	34
WPC-1	WPC Cabinet	16	79′	36	E1	36
WPC-2	WPC Cabinet	16	79′	36	E1	36
RDAS	Room 110	14	98′	34	C1	34

5.3 Existing Range and Setpoint:

Loop Identifier: WPC

Range: 0 to 350 Mwt (total)
0 to 100 Mwt (per quadrant)

References: 18

Notes:

1) There are no TSR setpoints associated with these loops. This calculation will provide total loop uncertainties for use in validating existing TSR Action statements/LCOs and verify loop calibration tolerances are within the TSR LCO requirement.

5.0 Design Input Data (Continued):

5.4 Component Data:

COMPONENT: TE-1-1A,2A,3A,4A,5A,1B,2B,3B,4B

MANUFACTURER/MODEL: Pt100 RTD
REF#: 20 NOTE(S): N/A

INSTRUMENT RANGE: N/A REF#: N/A NOTE(S): 1

==========

INPUT RANGE: N/A OUTPUT RANGE: N/A

OVERRANGE LIMIT: N/A REF#: N/A NOTE(S): 2

==========

MIN/MAX ABNORMAL TEMP: N/A ACCIDENT TEMP: N/A

REF# N/A NOTE(S): N/A

==========

Instrument No.: TE-1-1A,2A,3A,4A,5A,1B,2B,3B,4B		
TYPE	VALUE - ohms	NOTE
RA	0.1	1
Ab	N/A	2

Notes:

1. Reference 20, Appendix B, page 3
2. Input and output values will be derived from RTD tables when required.

5.0 Design Input Data (Continued):

5.4 Component Data Notes:

COMPONENT TE-1-1A,2A,3A,4A,5A,1B,2B,3B,4B

1 Per Reference 20, the RTD's accuracy is ±0.1 ohms or ±0.45 °F of reading; Thus.

RA = ± 0.45 °F = ± 0.1 ohms

2 Since the RTD is not calibrated there is no acceptance band. Thus,

Ab = N/A

5.0 Design Input Data (Continued):

5.4 Component Data:

COMPONENT: FE-1-1,2,3,4

MANUFACTURER/MODEL: orifice plate REF#: 19 NOTE(S): N/A

INSTRUMENT RANGE: N/A REF#: N/A NOTE(S): N/A

==========

INPUT RANGE: 0 - 16000 gpm OUTPUT RANGE: 0 - 570"wc

OVERRANGE LIMIT: N/A REF#: 18 NOTE(S): 1

==========

MIN/MAX ABNORMAL TEMP: N/A ACCIDENT TEMP: N/A
REF# N/A NOTE(S): N/A

==========

Instrument No.: FE-1-1,2,3,4		
TYPE	VALUE - "wc	NOTE
RA	10.8"wc	1
Ab	N/A	2

Notes:

1. Input range extracted from Reference 18 calibration data for the quadrant flow recorders. Output range extracted from Reference 18 calibration data for the quadrant flow transmitters.

5.0 Design Input Data (Continued):

5.4 Component Data Notes:

COMPONENT FE-1-1,2,3,4

1 Per Reference 19, the orifice accuracy is ±1.9%. The accuracy will be applied to the full range for conservatism; Thus,

RA = ±0.019 x 570 "wc
RA = ± 10.8 "wc

The ratio of "wc developed by the orifice plate to actual gpm is not constant over the elements range.

2 Since the orifice is not calibrated there is no acceptance band. Thus,

Ab = N/A

5.0 Design Input Data (Continued):

5.4 Component Data:

COMPONENT: FT-1-1,2,3,4

MANUFACTURER/MODEL: Foxboro 823 DP REF#: 20 NOTE(S): N/A

INSTRUMENT RANGE: 0 - 750 "wc REF#: 21 NOTE(S): N/A

==========

INPUT RANGE: 0-570 "wc OUTPUT RANGE: 4 - 20 mA

OVERRANGE LIMIT: 600 psig REF #: 18,21 NOTE(S): N/A

==========

MIN/MAX ABNORMAL TEMP: 40/125 °F ACCIDENT TEMP: N/A

REF #: 4 NOTE(S): N/A

==========

5.0 Design Input Data (Continued):

5.4 Component Data (Continued):

Instrument No.: FT-1-1,2,3,4		
TYPE	VALUE "wc	NOTE
RA	0.64	1
DE	1.14	2
NTE	0.74	3
SPE	1.11	16
SEC	N/A	4
PSE	Negligible	6
RND	N/A	7
ICT	0.4	8
ICR	N/A	9
OCT	N/A	10
OCR	N/A	10
Ab	0.64	11
SE	N/A	12
RAD	N/A	13
ATE	N/A	17
PRCS	N/A	15
VE	Negligible	18
WL	N/A	14
INDR	N/A	5

5.0 Design Input Data (Continued):

5.4 Component Data Notes:

COMPONENT: FT-1-1,2,3,4

1 Per References 21, the transmitter has an accuracy of 0.1% of calibrated span, including linearity, hysteresis and repeatability. Per References 12 and 13, the transmitter mAdc output is shunted by a 50 ohm resistor to obtain a 0.2 - 1Vdc output. The resistor has an accuracy of 0.05% per Reference 20. The transmitter and resistor accuracies are combined by the SRSS method to obtain the total reference accuracy. Thus,

$RA = \pm(0.1\%^2 + 0.05\%^2)^{1/2} \times 570$ "wc

$RA = \pm 0.64$ "wc

2 Per Reference 21, the transmitter has a drift of ±0.1% of the reference span over a six-month period. The reference span is defined by Reference 21 as 500 "wc. The transmitter is calibrated annually. For conservatism the specified drift uncertainty will be doubled and applied to the calibrated span. Thus,

$DE = \pm 0.1\% \times 570$ "wc $\times 2$

$DE = \pm 1.14$ "wc

3 Per Reference 21, the transmitter has a normal ambient temperature effect of ±0.2% of the reference span or ±0.2% of the maximum span per 100° F ambient temperature change. The effect can be calculated to be ±0.2% of the calibrated span using linear regression. Per Reference 4, the normal ambient temperature for Accessible areas is 70°F to 105°F. Per Reference 4, the abnormal ambient temperature for Accessible areas is 40°F to 125°F. For conservatism, the largest change in ambient temperature can occur when lowest abnormal temperature is reached after calibrating the instrument at the highest normal temperature (65°F change in ambient temperature). Thus,

$NTE = \pm 0.2\% \times 570 \times 65°F/100°F$

$NTE = \pm 0.74$ "wc

5.0 Design Input Data (Continued):

5.4 Component Data Notes:

COMPONENT: FT-1-1,2,3,4

4 Per Reference 21, the span error is included with the static pressure effect. Thus,

SEC = N/A

5 There is no indicator reading error associated with a transmitter. Thus,

INDR = N/A

6 Per Reference 21, the power supply effect the transmitter is less than 0.005% of output span per volt of power supply variation. Per Reference 27, the power supply specification provides an output voltage variation of ± 0.1% for load variations and 0.05% for line voltage variations. Therefore the power supply effect on the accuracy of the transmitter loop is;

PSE = ± ((0.05% + 0.1%)x 24Vdc) X 0.005% x 570 "wc
PSE = ± 0.001 "wc
PSE = Negligible

7 Reference 21 does not specify normal radiation effect. Per Reference 4, the worst case dose rate is 10 mR/hr. For an equipment life of 20 years this would give a total dose of 1.75 X 10^3 if the dose OF 1.75 X 10^3 is amortized linearly over 20 years, the dose between calibrations would be:

12 months ÷ (20 x 12) = 0.05 x 1.75E3 = 8.75E1 RADS

Chronic radiation effects will be corrected by the periodic (12 months) calibration of the loop. Thus,

RND = N/A

5.0 Design Input Data (Continued):

5.4 Component Data Notes:

COMPONENT: FT-1-1,2,3,4

8 Per References 20, and 28 the input M&TE is a W&T Model 665-D/030, which has an accuracy of ±0.05% of full M&TE scale. Thus,

ICT = ± 0.0005 x 800 "wc
ICT = ± 0.4 "wc

9 The W&T 665-D/030 is a digital instrument and there will be no reading error. Therefore,

ICR = N/A

10 Per Reference 18 no output M&TE is used. Thus,

OCT = N/A
OCR = N/A

11 The acceptance band should be selected to equal the manufacturer's accuracy. Thus,

Ab = RA
Ab = ± 0.64 "wc

12 The WPC is not required during or post seismic event. Thus,

SE = N/A

13 The WPC is not required during or post accident conditions. Thus,

RAD = N/A

14 Since both sensing lines are at the same elevation at the orifice plate, it is not a consideration. Thus,

WL = N/A

5.0 Design Input Data (Continued):

5.4 Component Data Notes:

COMPONENT: FT-1-1,2,3,4

15 Since the transmitter is measuring the process there are no uncertainties in the process that will introduce any error.

PRCS = N/A

16 Per Reference 21, the static pressure effect is ± 0.4% of the maximum span per 1000 PSI. Per Reference 4, the reactor pressure is a nominal 370 PSI. Thus,

SPE = ±(0.4% x 750 "wc) x 370 PSI/1000 PSI
SPE = ±1.11 "wc

17 This transmitter is not subjected to any accident condition ambient temperatures that are not already addressed under the normal temperature effects. Thus,
ATE = N/A

18 Per Reference 21, the vibration effect is 0.1% of reference span for acceleration up to 30 m/s^2 (3 g). Per Reference 4, accessible area vibration will not exceed 0.05g. This is a small fraction of the tested acceleration and is negligible. Thus,

VE = N/A

5.0 Design Input Data (Continued):

5.4 Component Data:

COMPONENT: WPC-1,2 (RT41)

MANUFACTURER/MODEL: Azonix/RT41 (temp. input card)
REF#: 22 NOTE(S): N/A

INSTRUMENT RANGE: N/A REF#: N/A NOTE(S): 1

==========

INPUT RANGE: N/A OUTPUT RANGE: N/A

OVERRANGE LIMIT: N/A REF#: 22 NOTE(S): 2

==========

MIN/MAX ABNORMAL TEMP: N/A ACCIDENT TEMP: N/A

REF# N/A NOTE(S): N/A

==========

Instrument No.: RT41		
TYPE	VALUE - ohms	NOTE
RA	0.004	1
Ab	0.004	2
ICT_{low}	0.0005	3
ICT_{high}	0.0015	3
ICR	N/A	4
INDR	0.001	5

Notes:

1. One channel used for each of the following: TE-1-1A, 2A, 3A, 4A, 5A, 1B, 2B, 3B, 4B

2. Input and output values will be derived from RTD tables when required.

5.0 Design Input Data (Continued):

5.4 Component Data Notes:

COMPONENT WPC-1,2 (RT41)

1 Per Reference 22, the RT41 channel accuracy is ±0.004 ohms or ±0.02 °F of reading; Thus.

RA = ± 0.02 °F = ± 0.004 ohms

2 The acceptance band should be selected equal to the manufacturer's accuracy. Thus,

Ab = RA
Ab = ± 0.004 ohms

3 Per References 17 & 35 the input M&TE are precision 100 and 300 ohm resistors, calibrated to 5 parts per million. From Reference 41 the change in resistance of the RTD per degree of temperature change is 0.22Ω/F°. Thus,

ICT_{low} = ±(0.0005Ω /0.22Ω/F°)
ICT_{low} = ±0.002 F°
ICT_{low} = ±0.0005Ω

ICT_{high} = ±(0.0015Ω /0.22Ω/F°)
ICT_{high} = ±0.007 F°
ICT_{high} = ±0.0015Ω

4 The resistors have no reading error. Therefore,

ICR = N/A

5 The WPC has a display that shows three places past the decimal point and is used during card calibration. The reading error is taken to ± the value of the last digit. Thus

INDR = ± 0.001 Ω = ±0.005 F°

5.0 Design Input Data (Continued):

5.4 Component Data:

COMPONENT: WPC-1,2 (PAI3 input)

MANUFACTURER/MODEL: Azonix/PAI3 (input portion of card)
REF#: 17 NOTE(S): N/A

INSTRUMENT RANGE: -1 to +1 Vdc REF#: 37 NOTE(S): 1

==========

INPUT RANGE: 0.2 to 1.0 Vdc OUTPUT RANGE: N/A

OVERRANGE LIMIT: N/A REF#: 18,17 NOTE(S): 2

==========

MIN/MAX ABNORMAL TEMP: N/A ACCIDENT TEMP: N/A

REF# N/A NOTE(S): N/A

==========

Instrument No.: PAI3		
TYPE	VALUE - Vdc	NOTE
RA	0.00004	1
Ab	0.00004	2
ICT	negligible	3
ICR	N/A	3
INDR	0.0001	4

Notes:

1. One channel used for each of the following: FT-1-1, FT-1-2 FT-1-3, FT-1-4
2. Input from transmitter is 0.2 to 1.0 Vdc. Card calibration is -0.5 to 0.5 Vdc.

5.0 Design Input Data (Continued):

5.4 Component Data Notes:

COMPONENT WPC-1,2 (PAI3 input)

1 Per Reference 37, the PAI3 channel accuracy is ±0.002% for a span of -1 to 1 Vdc; Thus.

RA = ± 0.002% x 2 Vdc
RA = ± 0.00004 Vdc / 0.8 Vdc span
RA = ± 0.005% of span
RA = ± 0.00004 Vdc

2 The acceptance band should be selected equal to the manufacturer's accuracy. Thus,

Ab = RA
Ab = ± 0.00004 Vdc

3 Per Reference 37 the input M&TE EDC Model CR103 has an accuracy of 0.005% plus 30 micro volts of setting. Thus,

ICT = ±(0.005% x 0.5 Vdc) + 0.00003 Vdc
ICT = ±0.00006 Vdc
ICT = insignificant
ICR = N/A

4 The WPC has a display that shows four places past the decimal point and is used during card calibration. The reading error is taken to ± the value of the last digit. Thus

INDR = ± 0.0001 Vdc

5.0 Design Input Data (Continued):

5.4 Component Data:

COMPONENT: WPC-1,2 (GIO4 output)

MANUFACTURER/MODEL: Azonix/GIO4 (output portion of card)
REF#: 17 NOTE(S): N/A

INSTRUMENT RANGE: 0 - 20 mAdc REF#: 23 NOTE(S): N/A

==========

INPUT RANGE: N/A OUTPUT RANGE: 0 - 20 mAdc

OVERRANGE LIMIT: N/A REF#: 18,17 NOTE(S): N

==========

MIN/MAX ABNORMAL TEMP: N/A ACCIDENT TEMP: N/A

REF# N/A NOTE(S): N/A

==========

Instrument No.: GIO4		
TYPE	VALUE - mAdc	NOTE
RA	0.02	1
Ab	0.02	2
ICT	N/A	3
ICR	N/A	3
OCT	0.011	4
OCR	N/A	4

Notes:

1. Output to recorders from GIO4 card is 0 to 20 mAdc. Card calibration is 5 to 15 mAdc.

5.0 Design Input Data (Continued):

5.4 Component Data Notes:

COMPONENT WPC-1,2 (GIO4 output)

1 Per Reference 23, the GIO4 channel accuracy is ±0.1% for a span of 0 to 20 mAdc; Thus.

RA = ± 0.1% x 20 mAdc
RA = ± 0.02 mAdc

2 The acceptance band should be selected equal to the manufacturer's accuracy. Thus,

Ab = RA
Ab = ± 0.02 mAdc

3 Per Reference 17 there is no input M&TE. Thus,

ICT = N/A
ICR = N/A

4 Per References 17 and 30, a Fluke 702 calibrator with an accuracy of ±0.025% of reading plus 0.025% of full calibrator scale (30.000 mAdc) will be used. For conservatism the reading will be assumed to be full scale. In order to minimize OCR, the M&TE has a digital readout. Thus,

OCT = ± (0.00025 x 15 mAdc) + (0.00025 x 30 mAdc)
OCT = ± 0.011 mAdc
OCT = ± 0.011 mAdc / 20 mAdc = ± 0.06% of span
OCT = ± 0.011 mAdc
OCR = N/A

5.0 Design Input Data (Continued):

5.4 Component Data:

COMPONENT: FRS-1-1,2,3,4,A,B,C,D

MANUFACTURER/MODEL: Molytek Recorder Model 2702
REF#: 18 NOTE(S): N/A

INSTRUMENT RANGE: 0 - 1 Vdc REF#: 29 NOTE(S): N/A

==========

INPUT RANGE: 0 - 20 mAdc (0-1Vdc) OUTPUT RANGE: 0 - 16000 gpm

OVERRANGE LIMIT: N/A REF#: 18 NOTE(S): N/A

==========

MIN/MAX ABNORMAL TEMP: 40/125 °F ACCIDENT TEMP: N/A

REF# 4 NOTE(S): N/A

==========

Instrument No.: FRS-1-1,2,3,4,A,B,C,D		
TYPE	VALUE - gpm	NOTE
RA	16	1
DE	N/A	2
ICT	N/A	5
ICR	N/A	5
OCT	N/A	6
OCR	N/A	6
INDR	1	7
Ab	16	4
SE	N/A	8
RAD	N/A	3
ATE	N/A	3

5.0 Design Input Data (Continued):

5.4 Component Data Notes:

COMPONENT FRS-1-1,2,3,4,A,B,C,D

1 Per Reference 29, the Molytek Recorder accuracy is ±0.1% of full scale range in volts.

RA = ±0.001 x 1Vdc = ±0.001 Vdc
RA = ±0.001 x 20 mAdc = ±0.02 mAdc
RA = ±0.001 x 16000 gpm
RA = ± 16.0 gpm

2. Per Reference 29, no long-term drift is given and it is assumed to be included in the reference accuracy. Thus

DE = N/A

3 The recorder is located in a mild environment. Therefore accident temperature and radiation effect are not applicable

ATE = RAD = N/A

4. The acceptance band should be selected equal to the manufacturer's accuracy. Thus,

Ab = RA
Ab = ± 16.0 gpm

5. Per Reference 18, The WPC will be used. However, since the WPC is part of the loop,

ICT = N/A
ICR = N/A

5.0 Design Input Data (Continued):

5.4 Component Data Notes:

COMPONENT FRS-1-1,2,3,4,A,B,C,D

6 There is no output-calibrating instrument required and hence OCT and OCR are not applicable.

OCT = OCR = N/A

7 The recorder has a five digit readout. The reading error is taken to ± the value of the last digit. Thus

INDR = ± 1.0 gpm

8 The recorder is not required to function during or post seismic event. Therefore

SE = N/A

5.0 Design Input Data (Continued):

5.4 Component Data:

COMPONENT: FRS-1-5A,5

MANUFACTURER/MODEL: Molytek Recorder Model 2702
REF#: 18 NOTE(S): N/A

INSTRUMENT RANGE: 0 - 1 Vdc REF#: 29 NOTE(S): N/A

==========

INPUT RANGE: 0 - 20 mAdc (0-1Vdc) OUTPUT RANGE: 0 - 64.0 Kgpm

OVERRANGE LIMIT: N/A REF#: 18 NOTE(S): N/A

==========

MIN/MAX ABNORMAL TEMP: 40/125 °F ACCIDENT TEMP: N/A

REF# 4 NOTE(S): N/A

==========

Instrument No.: FRS-1-5A,5		
TYPE	VALUE - gpm	NOTE
RA	64	1
DE	N/A	2
ICT	N/A	5
ICR	N/A	5
OCT	N/A	6
OCR	N/A	6
INDR	100	7
Ab	100	4
SE	N/A	8
RAD	N/A	3
ATE	N/A	3

5.0 Design Input Data (Continued):

5.4 Component Data Notes:

COMPONENT FRS-1-5A,5

1 Per Reference 29, the Molytek Recorder accuracy is ±0.1% of full scale range in volts.

RA = ±0.001 x 1Vdc = ±0.001 Vdc
RA = ±0.001 x 20 mAdc = ±0.02 mAdc
RA = ±0.001 x 64000 gpm
RA = ± 64.0 gpm

2. Per Reference 29, no long-term drift is given and it is assumed to be included in the reference accuracy. Thus

DE = N/A

3 The recorder is located in a mild environment. Therefore accident temperature and radiation effect are not applicable

ATE = RAD = N/A

4. The acceptance band should be selected equal to the manufacturer's accuracy. Thus,

Ab = RA
Ab = ± 64.0 gpm

Per Note 7 the smallest scale division is 100 gpm. Therefore Ab is rounded up to the nearest discernable reading.

Ab = ± 100 gpm

5. Per Reference 18, The WPC will be used. However, since the WPC is part of the loop,

ICT = N/A
ICR = N/A

5.0 Design Input Data (Continued):

5.4 Component Data Notes:

COMPONENT FRS-1-5A,5

6 There is no output-calibrating instrument required and hence OCT and OCR are not applicable.

OCT = OCR = N/A

7 The recorder has a three digit readout displaying Kgpm. The reading error is taken to ± the value of the last digit. Thus

INDR = ± 100 gpm

8 The recorder is not required to function during or post seismic event. Therefore

SE = N/A

5.0 Design Input Data (Continued):

5.4 Component Data:

COMPONENT: DTRS-1-1,2,3,4,5,A,B,C,D,E

MANUFACTURER/MODEL: Molytek Recorder Model 2702
REF#: 18 NOTE(S): N/A

INSTRUMENT RANGE: 0 - 1 Vdc REF#: 29 NOTE(S): N/A

==========

INPUT RANGE: 0 - 20 mAdc (0-1Vdc) OUTPUT RANGE: 0 - 60.0 F°

OVERRANGE LIMIT: N/A REF#: 18 NOTE(S): N/A

==========

MIN/MAX ABNORMAL TEMP: 40/125 °F ACCIDENT TEMP: N/A

REF# 4 NOTE(S): N/A

==========

Instrument No.: DTRS-1-1,2,3,4,5,A,B,C,D,E		
TYPE	VALUE - F°	NOTE
RA	0.06	1
DE	N/A	2
ICT	N/A	5
ICR	N/A	5
OCT	N/A	6
OCR	N/A	6
INDR	0.1	7
Ab	0.1	4
SE	N/A	8
RAD	N/A	3
ATE	N/A	3

5.0 Design Input Data (Continued):

5.4 Component Data Notes:

COMPONENT DTRS-1-1,2,3,4,5,A,B,C,D,E

1 Per Reference 29, the Molytek Recorder accuracy is ±0.1% of full scale range in volts.

RA = ±0.001 x 1Vdc = ±0.001 Vdc
RA = ±0.001 x 20 mAdc = ±0.02 mAdc
RA = ±0.001 x 60 F°
RA = ± 0.06 F°

2. Per Reference 29, no long-term drift is given and it is assumed to be included in the reference accuracy. Thus

DE = N/A

3 The recorder is located in a mild environment. Therefore accident temperature and radiation effect are not applicable

ATE = RAD = N/A

4. The acceptance band should be selected equal to the manufacturer's accuracy. Thus,

Ab = RA
Ab = ± 0.06 F°

Per Note 7 the smallest scale division is 0.1 F°. Therefore Ab is rounded up to the nearest discernable reading.

Ab = ± 0.1 F°

5. Per Reference 18, The WPC will be used. However, since the WPC is part of the loop,

ICT = N/A
ICR = N/A

5.0 Design Input Data (Continued):

5.4 Component Data Notes:

COMPONENT DTRS-1-1,2,3,4,5,A,B,C,D,E

6 There is no output-calibrating instrument required and hence OCT and OCR are not applicable.

OCT = OCR = N/A

7 The recorder has a three digit readout. The reading error is taken to ± the value of the last digit. Thus

INDR = ± 0.1 F°

8 The recorder is not required to function during or post seismic event. Therefore

SE = N/A

5.0 Design Input Data (Continued):

5.4 Component Data:

COMPONENT: TRS-1-11,12,13,14,21,22,23,24

MANUFACTURER/MODEL: Molytek Recorder Model 2702
REF#: 18 NOTE(S): N/A

INSTRUMENT RANGE: 0 - 1 Vdc REF#: 29 NOTE(S): N/A

==========

INPUT RANGE: 0 - 20 mAdc (0-1Vdc) OUTPUT RANGE: 0 - 200.0 F°

OVERRANGE LIMIT: N/A REF#: 18 NOTE(S): N/A

==========

MIN/MAX ABNORMAL TEMP: 40/125 °F ACCIDENT TEMP: N/A

REF# 4 NOTE(S): N/A

==========

Instrument No.: TRS-1-11,12,13,14,21,22,23,24		
TYPE	VALUE - F°	NOTE
RA	0.2	1
DE	N/A	2
ICT	N/A	5
ICR	N/A	5
OCT	N/A	6
OCR	N/A	6
INDR	0.1	7
Ab	0.2	4
SE	N/A	8
RAD	N/A	3
ATE	N/A	3

5.0 Design Input Data (Continued):

5.4 Component Data Notes:

COMPONENT TRS-1-11,12,13,14,21,22,23,24

1 Per Reference 29, the Molytek Recorder accuracy is ±0.1% of full scale range in volts.

RA = ±0.001 x 1Vdc = ±0.001 Vdc
RA = ±0.001 x 20 mAdc = ±0.02 mAdc
RA = ±0.001 x 200 F°
RA = ± 0.2 F°

2. Per Reference 29, no long-term drift is given and it is assumed to be included in the reference accuracy. Thus

DE = N/A

3 The recorder is located in a mild environment. Therefore accident temperature and radiation effect are not applicable

ATE = RAD = N/A

4. The acceptance band should be selected equal to the manufacturer's accuracy. Thus,

Ab = RA
Ab = ± 0.2 F°

5. Per Reference 18, The WPC will be used. However, since the WPC is part of the loop,

ICT = N/A
ICR = N/A

5.0 Design Input Data (Continued):

5.4 Component Data Notes:

COMPONENT TRS-1-11,12,13,14,21,22,23,24

6 There is no output-calibrating instrument required and hence OCT and OCR are not applicable.

OCT = OCR = N/A

7 The recorder has a four digit readout. The reading error is taken to ± the value of the last digit. Thus

INDR = ± 0.1 F°

8 The recorder is not required to function during or post seismic event. Therefore

SE = N/A

5.0 Design Input Data (Continued):

5.4 Component Data:

COMPONENT: TRS-1-17,18,20,27

MANUFACTURER/MODEL: Molytek Recorder Model 2702
REF#: 18 NOTE(S): N/A

INSTRUMENT RANGE: 0 - 1 Vdc REF#: 29 NOTE(S): N/A

==========

INPUT RANGE: 0 - 20 mAdc (0-1Vdc) OUTPUT RANGE: 100 - 200.0 F°

OVERRANGE LIMIT: N/A REF#: 18 NOTE(S): N/A

==========

MIN/MAX ABNORMAL TEMP: 40/125 °F ACCIDENT TEMP: N/A

REF# 4 NOTE(S): N/A

==========

Instrument No.: TRS-1-17,18,20,27		
TYPE	VALUE - F°	NOTE
RA	0.1	1
DE	N/A	2
ICT	N/A	5
ICR	N/A	5
OCT	N/A	6
OCR	N/A	6
INDR	0.1	7
Ab	0.1	4
SE	N/A	8
RAD	N/A	3
ATE	N/A	3

5.0 Design Input Data (Continued):

5.4 Component Data Notes:

COMPONENT TRS-1-17,18,20,27

1 Per Reference 29, the Molytek Recorder accuracy is ±0.1% of full scale range in volts.

RA = ±0.001 x 1Vdc = ±0.001 Vdc
RA = ±0.001 x 20 mAdc = ±0.02 mAdc
RA = ±0.001 x 100 F°
RA = ± 0.1 F°

2. Per Reference 29, no long-term drift is given and it is assumed to be included in the reference accuracy. Thus

DE = N/A

3 The recorder is located in a mild environment. Therefore accident temperature and radiation effect are not applicable

ATE = RAD = N/A

4. The acceptance band should be selected equal to the manufacturer's accuracy. Thus,

Ab = RA
Ab = ± 0.1 F°

5. Per Reference 18, The WPC will be used. However, since the WPC is part of the loop,

ICT = N/A
ICR = N/A

5.0 Design Input Data (Continued):

5.4 Component Data Notes:

COMPONENT TRS-1-17,18,20,27

6 There is no output-calibrating instrument required and hence OCT and OCR are not applicable.

OCT = OCR = N/A

7 The recorder has a four digit readout. The reading error is taken to ± the value of the last digit. Thus

INDR = ± 0.1 F°

8 The recorder is not required to function during or post seismic event. Therefore

SE = N/A

5.0 Design Input Data (Continued):

5.4 Component Data:

COMPONENT: WRS-1-1,2,3,4,A,B,C,D

MANUFACTURER/MODEL: Molytek Recorder Model 2702
REF#: 18 NOTE(S): N/A

INSTRUMENT RANGE: 0 - 1 Vdc REF#: 29 NOTE(S): N/A

==========

INPUT RANGE: 0 - 20 mAdc (0-1Vdc) OUTPUT RANGE: 0 - 100.0 MW

OVERRANGE LIMIT: N/A REF#: 18 NOTE(S): N/A

==========

MIN/MAX ABNORMAL TEMP: 40/125 °F ACCIDENT TEMP: N/A

REF# 4 NOTE(S): N/A

==========

Instrument No.: WRS-1-1,2,3,4,A,B,C,D		
TYPE	VALUE - MW	NOTE
RA	0.1	1
DE	N/A	2
ICT	N/A	5
ICR	N/A	5
OCT	N/A	6
OCR	N/A	6
INDR	0.1	7
Ab	0.1	4
SE	N/A	8
RAD	N/A	3
ATE	N/A	3

5.0 Design Input Data (Continued):

5.4 Component Data Notes:

COMPONENT WRS-1-1,2,3,4,A,B,C,D

1 Per Reference 29, the Molytek Recorder accuracy is ±0.1% of full scale range in volts.

RA = ±0.001 x 1Vdc = ±0.001 Vdc
RA = ±0.001 x 20 mAdc = ±0.02 mAdc
RA = ±0.001 x 100 MW
RA = ± 0.1 MW

2. Per Reference 29, no long-term drift is given and it is assumed to be included in the reference accuracy. Thus

DE = N/A

3 The recorder is located in a mild environment. Therefore accident temperature and radiation effect are not applicable

ATE = RAD = N/A

4. The acceptance band should be selected equal to the manufacturer's accuracy. Thus,

Ab = RA
Ab = ± 0.1 MW

5. Per Reference 18, The WPC will be used. However, since the WPC is part of the loop,

ICT = N/A
ICR = N/A

5.0 Design Input Data (Continued):

5.4 Component Data Notes:

COMPONENT WRS-1-1,2,3,4,A,B,C,D

6 There is no output-calibrating instrument required and hence OCT and OCR are not applicable.

OCT = OCR = N/A

7 The recorder has a four digit readout. The reading error is taken to ± the value of the last digit. Thus

INDR = ± 0.1 MW

8 The recorder is not required to function during or post seismic event. Therefore

SE = N/A

5.0 Design Input Data (Continued):

5.4 Component Data:

COMPONENT: WRS-1-5A,5

MANUFACTURER/MODEL: Molytek Recorder Model 2702
REF#: 18 NOTE(S): N/A

INSTRUMENT RANGE: 0 - 1 Vdc REF#: 29 NOTE(S): N/A

==========

INPUT RANGE: 0 - 20 mAdc (0-1Vdc) OUTPUT RANGE: 0 - 350.0 MW

OVERRANGE LIMIT: N/A REF#: 18 NOTE(S): N/A

==========

MIN/MAX ABNORMAL TEMP: 40/125 °F ACCIDENT TEMP: N/A

REF# 4 NOTE(S): N/A

==========

Instrument No.: WRS-1-5A,5		
TYPE	VALUE - MW	NOTE
RA	0.35	1
DE	N/A	2
ICT	N/A	5
ICR	N/A	5
OCT	N/A	6
OCR	N/A	6
INDR	0.1	7
Ab	0.4	4
SE	N/A	8
RAD	N/A	3
ATE	N/A	3

5.0 Design Input Data (Continued):

5.4 Component Data Notes:

COMPONENT WRS-1-5A,5

1 Per Reference 29, the Molytek Recorder accuracy is ±0.1% of full scale range in volts.

RA = ±0.001 x 1Vdc = ±0.001 Vdc
RA = ±0.001 x 20 mAdc = ±0.02 mAdc
RA = ±0.001 x 350 MW
RA = ± 0.35 MW

2. Per Reference 29, no long-term drift is given and it is assumed to be included in the reference accuracy. Thus

DE = N/A

3 The recorder is located in a mild environment. Therefore accident temperature and radiation effect are not applicable

ATE = RAD = N/A

4. The acceptance band should be selected equal to the manufacturer's accuracy. Thus,

Ab = RA
Ab = ± 0.35 MW

Per Note 7 the smallest scale division is 0.1 F°. Therefore Ab is rounded up to the nearest discernable reading.

Ab = ± 0.4 MW

5. Per Reference 18, The WPC will be used. However, since the WPC is part of the loop,

ICT = N/A
ICR = N/A

5.0 Design Input Data (Continued):

5.4 Component Data Notes:

COMPONENT WRS-1-5A,5

6 There is no output-calibrating instrument required and hence OCT and OCR are not applicable.

OCT = OCR = N/A

7 The recorder has a four digit readout. The reading error is taken to ± the value of the last digit. Thus

INDR = ± 0.1 MW

8 The recorder is not required to function during or post seismic event. Therefore

SE = N/A

5.0 Design Input Data (Continued):

5.4 Component Data:

COMPONENT: RDAS (FRS-1-1,2,3,4,A,B,C)

MANUFACTURER/MODEL: Neff Instrument / 470050
REF#: 25 NOTE(S): N/A

INSTRUMENT RANGE: 0 to 0.32 Vdc REF#: 25 NOTE(S): N/A

==========

INPUT RANGE: 0- 20 mAdc (0- 0.32 Vdc) OUTPUT RANGE: 0 - 16000 gpm

OVERRANGE LIMIT: N/A REF#: 18 NOTE(S): N/A

==========

MIN/MAX ABNORMAL TEMP: 40/125 °F ACCIDENT TEMP: N/A

REF# 4 NOTE(S): N/A

==========

Instrument No.: RDAS (FRS-1-1,2,3,4,A,B,C,D)		
TYPE	VALUE - gpm	NOTE
RA	22.4	1
DE	N/A	2
NTE	N/A	9
ICT	N/A	5
ICR	N/A	5
OCT	N/A	6
OCR	N/A	6
INDR	1	7
Ab	23	4
SE	N/A	8
RAD	N/A	3
ATE	N/A	3

5.0 Design Input Data (Continued):

5.4 Component Data Notes:

COMPONENT RDAS (FRS-1-1,2,3,4,A,B,C)

1 Per Reference 25 and 38, the RDAS input accuracy is ±0.135% of full scale range and an additional ±0.01% for the input dropping resistor. Thus

$RA = \pm((0.00135^2 + 0.0001^2)^{1/2} = \pm\ 0.14\%$ of span
RA = ± 0.14% x 0.32 Vdc = ± .0005 Vdc
RA = ± 0.14% x 20 mAdc = ± 0.03 mAdc
RA = ± 0.14% x 16000 gpm
RA = ± 22.4 gpm

2. Per Reference 25, no long-term drift is given and it is assumed to be included in the reference accuracy. Thus

DE = N/A

3 The RDAS is located in a mild environment. Therefore accident temperature and radiation effect are not applicable

ATE = RAD = N/A

4. The acceptance band should be selected equal to the manufacturer's accuracy. Thus,

Ab = RA
Ab = ± 22.4 gpm

Per Note 7 the smallest scale division is 1 gpm. Therefore Ab is rounded up to the nearest discernable reading.

Ab = ± 23 gpm

5. Per Reference 18, The WPC will be used. However, since the WPC is part of the loop,

ICT = N/A
ICR = N/A

5.0 Design Input Data (Continued):

5.4 Component Data Notes:

COMPONENT RDAS (FRS-1-1,2,3,4,A,B,C)

6 There is no output-calibrating instrument required and hence OCT and OCR are not applicable.

OCT = OCR = N/A

7 The console display system has a display that shows no places past the decimal point. The reading error is taken to ± the value of the last digit. Thus

INDR = ± 1.0 gpm

8 RDAS is not required to function during or post seismic event. Therefore

SE = N/A

9 Per Reference 4, the normal ambient temperature for Accessible areas is 70°F to 105°F. Per Reference 4, the abnormal ambient temperature for Accessible areas is 40°F to 125°F. For conservatism, the largest change in ambient temperature can occur when lowest abnormal temperature is reached after calibrating the instrument at the highest normal temperature (65°F change in ambient temperature). The affect of a 65°F temperature delta is included in the Vendor's reference accuracy provided by Reference 25. Thus,

NTE = N/A

5.0 Design Input Data (Continued):

5.4 Component Data:

COMPONENT: RDAS (FRS-1-5A,5)

MANUFACTURER/MODEL: Neff Instrument / 470050
REF#: 25 NOTE(S): N/A

INSTRUMENT RANGE: 0 to 0.32 Vdc REF#: 25 NOTE(S): N/A

==========

INPUT RANGE: 0- 20 mAdc (0- 0.32 Vdc) OUTPUT RANGE: 0 - 64000 gpm

OVERRANGE LIMIT: N/A REF#: 18 NOTE(S): N/A

==========

MIN/MAX ABNORMAL TEMP: 40/125 °F ACCIDENT TEMP: N/A

REF# 4 NOTE(S): N/A

==========

Instrument No.: RDAS (FRS-1-5A,5)		
TYPE	VALUE - gpm	NOTE
RA	89.6	1
DE	N/A	2
NTE	N/A	9
ICT	N/A	5
ICR	N/A	5
OCT	N/A	6
OCR	N/A	6
INDR	1	7
Ab	90	4
SE	N/A	8
RAD	N/A	3
ATE	N/A	3

5.0 Design Input Data (Continued):

5.4 Component Data Notes:

COMPONENT RDAS (FRS-1-5A,5)

1 Per Reference 25 and 38, the RDAS input accuracy is ±0.135% of full scale range and an additional ±0.01% for the input dropping resistor. Thus

$RA = \pm((0.00135^2 + 0.0001^2)^{1/2} = \pm 0.14\%$ of span
RA = ± 0.14% x 0.32 Vdc = ± .0005 Vdc
RA = ± 0.14% x 20 mAdc = ± 0.03 mAdc
RA = ± 0.14% x 64000 gpm
RA = ± 89.6 gpm

2. Per Reference 25, no long-term drift is given and it is assumed to be included in the reference accuracy. Thus

DE = N/A

3 The RDAS is located in a mild environment. Therefore accident temperature and radiation effect are not applicable

ATE = RAD = N/A

4. The acceptance band should be selected equal to the manufacturer's accuracy. Thus,

Ab = RA
Ab = ± 89.6 gpm

Per Note 7 the smallest scale division is 1 gpm. Therefore Ab is rounded up to the nearest discernable reading.

Ab = ± 90 gpm

5. Per Reference 18, The WPC will be used. However, since the WPC is part of the loop,

ICT = N/A
ICR = N/A

5.0 Design Input Data (Continued):

5.4 Component Data Notes:

COMPONENT RDAS (FRS-1-5A,5)

6 There is no output-calibrating instrument required and hence OCT and OCR are not applicable.

OCT = OCR = N/A

7 The console display system has a display that shows no places past the decimal point. The reading error is taken to ± the value of the last digit. Thus

INDR = ± 1.0 gpm

8 RDAS is not required to function during or post seismic event. Therefore

SE = N/A

9 Per Reference 4, the normal ambient temperature for Accessible areas is 70°F to 105°F. Per Reference 4, the abnormal ambient temperature for Accessible areas is 40°F to 125°F. For conservatism, the largest change in ambient temperature can occur when lowest abnormal temperature is reached after calibrating the instrument at the highest normal temperature (65°F change in ambient temperature). The affect of a 65°F temperature delta is included in the Vendor's reference accuracy provided by Reference 25. Thus,

NTE = N/A

5.0 Design Input Data (Continued):

5.4 Component Data:

COMPONENT: RDAS (DTRS-1-1,2,3,4,5,A,B,C,D,E)

MANUFACTURER/MODEL: Neff Instrument / 470050
REF#: 25 NOTE(S): N/A

INSTRUMENT RANGE: 0 to 0.32 Vdc REF#: 25 NOTE(S): N/A

==========

INPUT RANGE: 0- 20 mAdc (0- 0.32 Vdc) OUTPUT RANGE: 0 - 60.0°F

OVERRANGE LIMIT: N/A REF#: 18 NOTE(S): N/A

==========

MIN/MAX ABNORMAL TEMP: 40/125 °F ACCIDENT TEMP: N/A

REF# 4 NOTE(S): N/A

==========

Instrument No.: RDAS (DTRS-1-1,2,3,4,5,A,B,C,D,E)		
TYPE	VALUE – °F	NOTE
RA	0.08	1
DE	N/A	2
NTE	N/A	9
ICT	N/A	5
ICR	N/A	5
OCT	N/A	6
OCR	N/A	6
INDR	0.1	7
Ab	0.1	4
SE	N/A	8
RAD	N/A	3
ATE	N/A	3

5.0 Design Input Data (Continued):

5.4 Component Data Notes:

COMPONENT RDAS (DTRS-1-1,2,3,4,5,A,B,C,D,E)

1 Per Reference 25 and 38, the RDAS input accuracy is ±0.135% of full scale range and an additional ±0.01% for the input dropping resistor. Thus

$RA = \pm((0.00135^2 + 0.0001^2)^{1/2} = \pm\ 0.14\%$ of span
$RA = \pm\ 0.14\% \times 0.32$ Vdc $= \pm\ .0005$ Vdc
$RA = \pm\ 0.14\% \times 20$ mAdc $= \pm\ 0.03$ mAdc
$RA = \pm\ 0.14\% \times 60°F$
$RA = \pm\ 0.08$ °F

2. Per Reference 25, no long-term drift is given and it is assumed to be included in the reference accuracy. Thus

DE = N/A

3 The RDAS is located in a mild environment. Therefore accident temperature and radiation effect are not applicable

ATE = RAD = N/A

4. The acceptance band should be selected equal to the manufacturer's accuracy. Thus,

Ab = RA
Ab = ± 0.08 °F

Per Note 7 the smallest scale division is 0.1 °F. Therefore Ab is rounded up to the nearest discernable reading.

Ab = ± 0.1 °F

5. Per Reference 18, The WPC will be used. However, since the WPC is part of the loop,

ICT = N/A
ICR = N/A

5.0 Design Input Data (Continued):

5.4 Component Data Notes:

COMPONENT RDAS (DTRS-1-1,2,3,4,5,A,B,C,D,E)

6 There is no output-calibrating instrument required and hence OCT and OCR are not applicable.

OCT = OCR = N/A

7 The console display system has a display that shows one place past the decimal point. The reading error is taken to ± the value of the last digit. Thus

INDR = ± 0.1 °F

8 RDAS is not required to function during or post seismic event. Therefore

SE = N/A

9 Per Reference 4, the normal ambient temperature for Accessible areas is 70°F to 105°F. Per Reference 4, the abnormal ambient temperature for Accessible areas is 40°F to 125°F. For conservatism, the largest change in ambient temperature can occur when lowest abnormal temperature is reached after calibrating the instrument at the highest normal temperature (65°F change in ambient temperature). The affect of a 65°F temperature delta is included in the Vendor's reference accuracy provided by Reference 25. Thus,

NTE = N/A

5.0 Design Input Data (Continued):

5.4 Component Data:

COMPONENT: RDAS (TRS-1-11,12,13,14,21,22,23,24)

MANUFACTURER/MODEL: Neff Instrument / 470050
REF#: 25 NOTE(S): N/A

INSTRUMENT RANGE: 0 to 0.32 Vdc REF#: 25 NOTE(S): N/A

==========

INPUT RANGE: 0- 20 mAdc (0- 0.32 Vdc) OUTPUT RANGE: 0 - 200.0°F

OVERRANGE LIMIT: N/A REF#: 18 NOTE(S): N/A

==========

MIN/MAX ABNORMAL TEMP: 40/125 °F ACCIDENT TEMP: N/A

REF# 4 NOTE(S): N/A

==========

Instrument No.: RDAS (TRS-1-11,12,13,14,21,22,23,24)		
TYPE	VALUE - °F	NOTE
RA	0.28	1
DE	N/A	2
NTE	N/A	9
ICT	N/A	5
ICR	N/A	5
OCT	N/A	6
OCR	N/A	6
INDR	0.1	7
Ab	0.3	4
SE	N/A	8
RAD	N/A	3
ATE	N/A	3

5.0 Design Input Data (Continued):

5.4 Component Data Notes:

COMPONENT RDAS (TRS-1-11,12,13,14,21,22,23,24)

1 Per Reference 25 and 38, the RDAS input accuracy is ±0.135% of full scale range and an additional ±0.01% for the input dropping resistor. Thus

$RA = \pm((0.00135^2 + 0.0001^2)^{1/2} = \pm 0.14\%$ of span
RA = ± 0.14% x 0.32 Vdc = ± .0005 Vdc
RA = ± 0.14% x 20 mAdc = ± 0.03 mAdc
RA = ± 0.14% x 200°F
RA = ± 0.28 °F

2. Per Reference 25, no long-term drift is given and it is assumed to be included in the reference accuracy. Thus

DE = N/A

3 The RDAS is located in a mild environment. Therefore accident temperature and radiation effect are not applicable

ATE = RAD = N/A

4. The acceptance band should be selected equal to the manufacturer's accuracy. Thus,

Ab = RA
Ab = ± 0.28 °F

Per Note 7 the smallest scale division is 0.1 °F. Therefore Ab is rounded up to the nearest discernable reading.

Ab = ± 0.3 °F

5. Per Reference 18, The WPC will be used. However, since the WPC is part of the loop,

ICT = N/A
ICR = N/A

5.0 Design Input Data (Continued):

5.4 Component Data Notes:

COMPONENT RDAS (TRS-1-11,12,13,14,21,22,23,24)

6 There is no output-calibrating instrument required and hence OCT and OCR are not applicable.

OCT = OCR = N/A

7 The console display system has a display that shows one place past the decimal point. The reading error is taken to ± the value of the last digit. Thus

INDR = ± 0.1 °F

8 RDAS is not required to function during or post seismic event. Therefore

SE = N/A

9 Per Reference 4, the normal ambient temperature for Accessible areas is 70°F to 105°F. Per Reference 4, the abnormal ambient temperature for Accessible areas is 40°F to 125°F. For conservatism, the largest change in ambient temperature can occur when lowest abnormal temperature is reached after calibrating the instrument at the highest normal temperature (65°F change in ambient temperature). The affect of a 65°F temperature delta is included in the Vendor's reference accuracy provided by Reference 25. Thus,

NTE = N/A

5.0 Design Input Data (Continued):

5.4 Component Data:

COMPONENT: RDAS (TRS-1-17,18,20,27)

MANUFACTURER/MODEL: Neff Instrument / 470050
REF#: 25 NOTE(S): N/A

INSTRUMENT RANGE: 0 to 0.32 Vdc REF#: 25 NOTE(S): N/A

==========

INPUT RANGE: 0- 20 mAdc (0- 0.32 Vdc) OUTPUT RANGE: 100.0 - 200.0°F

OVERRANGE LIMIT: N/A REF#: 18 NOTE(S): N/A

==========

MIN/MAX ABNORMAL TEMP: 40/125 °F ACCIDENT TEMP: N/A

REF# 4 NOTE(S): N/A

==========

Instrument No.: RDAS (TRS-1-17,18,20,27)		
TYPE	VALUE - °F	NOTE
RA	0.14	1
DE	N/A	2
NTE	N/A	9
ICT	N/A	5
ICR	N/A	5
OCT	N/A	6
OCR	N/A	6
INDR	0.1	7
Ab	0.2	4
SE	N/A	8
RAD	N/A	3
ATE	N/A	3

5.0 Design Input Data (Continued):

5.4 Component Data Notes:

COMPONENT RDAS (TRS-1-17,18,20,27)

1 Per Reference 25 and 38, the RDAS input accuracy is ±0.135% of full scale range and an additional ±0.01% for the input dropping resistor. Thus

$RA = \pm((0.00135^2 + 0.0001^2)^{1/2} = \pm\ 0.14\%$ of span
$RA = \pm\ 0.14\% \times 0.32$ Vdc $= \pm\ .0005$ Vdc
$RA = \pm\ 0.14\% \times 20$ mAdc $= \pm\ 0.03$ mAdc
$RA = \pm\ 0.14\% \times 100°F$
$RA = \pm\ 0.14$ °F

2. Per Reference 25, no long-term drift is given and it is assumed to be included in the reference accuracy. Thus

DE = N/A

3 The RDAS is located in a mild environment. Therefore accident temperature and radiation effect are not applicable

ATE = RAD = N/A

4. The acceptance band should be selected equal to the manufacturer's accuracy. Thus,

Ab = RA
Ab = ± 0.14 °F

Per Note 7 the smallest scale division is 0.1 °F. Therefore Ab is rounded up to the nearest discernable reading.

Ab = ± 0.2 °F

5. Per Reference 18, The WPC will be used. However, since the WPC is part of the loop,

ICT = N/A
ICR = N/A

5.0 Design Input Data (Continued):

5.4 Component Data Notes:

COMPONENT RDAS (TRS-1-17,18,20,27)

6 There is no output-calibrating instrument required and hence OCT and OCR are not applicable.

OCT = OCR = N/A

7 The console display system has a display that shows one place past the decimal point. The reading error is taken to ± the value of the last digit. Thus

INDR = ± 0.1 °F

8 RDAS is not required to function during or post seismic event. Therefore

SE = N/A

9 Per Reference 4, the normal ambient temperature for Accessible areas is 70°F to 105°F. Per Reference 4, the abnormal ambient temperature for Accessible areas is 40°F to 125°F. For conservatism, the largest change in ambient temperature can occur when lowest abnormal temperature is reached after calibrating the instrument at the highest normal temperature (65°F change in ambient temperature). The affect of a 65°F temperature delta is included in the Vendor's reference accuracy provided by Reference 25. Thus,

NTE = N/A

5.0 Design Input Data (Continued):

5.4 Component Data:

COMPONENT: RDAS (WRS-1-1,2,3,4,A,B,C,D)

MANUFACTURER/MODEL: Neff Instrument / 470050
REF#: 25 NOTE(S): N/A

INSTRUMENT RANGE: 0 to 0.32 Vdc REF#: 25 NOTE(S): N/A

==========

INPUT RANGE: 0- 20 mAdc (0- 0.32 Vdc) OUTPUT RANGE: 0 - 100.0 MW

OVERRANGE LIMIT: N/A REF#: 18 NOTE(S): N/A

==========

MIN/MAX ABNORMAL TEMP: 40/125 °F ACCIDENT TEMP: N/A

REF# 4 NOTE(S): N/A

==========

Instrument No.: RDAS (WRS-1-1,2,3,4,A,B,C,D)		
TYPE	VALUE - MW	NOTE
RA	0.14	1
DE	N/A	2
NTE	N/A	9
ICT	N/A	5
ICR	N/A	5
OCT	N/A	6
OCR	N/A	6
INDR	0.1	7
Ab	0.2	4
SE	N/A	8
RAD	N/A	3
ATE	N/A	3

5.0 Design Input Data (Continued):

5.4 Component Data Notes:

COMPONENT RDAS (WRS-1-1,2,3,4,A,B,C,D)

1 Per Reference 25 and 38, the RDAS input accuracy is ±0.135% of full scale range and an additional ±0.01% for the input dropping resistor. Thus

$RA = \pm((0.00135^2 + 0.0001^2)^{1/2} = \pm\ 0.14\%$ of span
RA = ± 0.14% x 0.32 Vdc = ± .0005 Vdc
RA = ± 0.14% x 20 mAdc = ± 0.03 mAdc
RA = ± 0.14% x 100 MW
RA = ± 0.14 MW

2. Per Reference 25, no long-term drift is given and it is assumed to be included in the reference accuracy. Thus

DE = N/A

3 The RDAS is located in a mild environment. Therefore accident temperature and radiation effect are not applicable

ATE = RAD = N/A

4. The acceptance band should be selected equal to the manufacturer's accuracy. Thus,

Ab = RA
Ab = ± 0.14 MW

Per Note 7 the smallest scale division is 0.1 MW. Therefore Ab is rounded up to the nearest discernable reading.

Ab = ± 0.2 MW

5. Per Reference 18, The WPC will be used. However, since the WPC is part of the loop,

ICT = N/A
ICR = N/A

5.0 Design Input Data (Continued):

5.4 Component Data Notes:

COMPONENT RDAS (WRS-1-1,2,3,4,A,B,C,D)

6 There is no output-calibrating instrument required and hence OCT and OCR are not applicable.

OCT = OCR = N/A

7 The console display system has a display that shows one place past the decimal point. The reading error is taken to ± the value of the last digit. Thus

INDR = ± 0.1 MW

8 RDAS is not required to function during or post seismic event. Therefore

SE = N/A

9 Per Reference 4, the normal ambient temperature for Accessible areas is 70°F to 105°F. Per Reference 4, the abnormal ambient temperature for Accessible areas is 40°F to 125°F. For conservatism, the largest change in ambient temperature can occur when lowest abnormal temperature is reached after calibrating the instrument at the highest normal temperature (65°F change in ambient temperature). The affect of a 65°F temperature delta is included in the Vendor's reference accuracy provided by Reference 25. Thus,

NTE = N/A

5.0 Design Input Data (Continued):

5.4 Component Data:

COMPONENT: RDAS (WRS-1-5A,5)

MANUFACTURER/MODEL: Neff Instrument / 470050
REF#: 25 NOTE(S): N/A

INSTRUMENT RANGE: 0 to 0.32 Vdc REF#: 25 NOTE(S): N/A

==========

INPUT RANGE: 0- 20 mAdc (0- 0.32 Vdc) OUTPUT RANGE: 0 - 350.0 MW

OVERRANGE LIMIT: N/A REF#: 18 NOTE(S): N/A

==========

MIN/MAX ABNORMAL TEMP: 40/125 °F ACCIDENT TEMP: N/A

REF# 4 NOTE(S): N/A

==========

Instrument No.: RDAS (WRS-1-5A,5)		
TYPE	VALUE - MW	NOTE
RA	0.49	1
DE	N/A	2
NTE	N/A	9
ICT	N/A	5
ICR	N/A	5
OCT	N/A	6
OCR	N/A	6
INDR	0.1	7
Ab	0.5	4
SE	N/A	8
RAD	N/A	3
ATE	N/A	3

5.0 Design Input Data (Continued):

5.4 Component Data Notes:

COMPONENT RDAS (WRS-1-5A,5)

1 Per Reference 25 and 38, the RDAS input accuracy is ±0.135% of full scale range and an additional ±0.01% for the input dropping resistor. Thus

$RA = \pm((0.00135^2 + 0.0001^2)^{1/2} = \pm\ 0.14\%$ of span
RA = ± 0.14% x 0.32 Vdc = ± .0005 Vdc
RA = ± 0.14% x 20 mAdc = ± 0.03 mAdc
RA = ± 0.14% x 350 MW
RA = ± 0.49 MW

2. Per Reference 25, no long-term drift is given and it is assumed to be included in the reference accuracy. Thus

DE = N/A

3 The RDAS is located in a mild environment. Therefore accident temperature and radiation effect are not applicable

ATE = RAD = N/A

4. The acceptance band should be selected equal to the manufacturer's accuracy. Thus,

Ab = RA
Ab = ± 0.49 MW

Per Note 7 the smallest scale division is 0.1 MW. Therefore Ab is rounded up to the nearest discernable reading.

Ab = ± 0.5 MW

5. Per Reference 18, The WPC will be used. However, since the WPC is part of the loop,

ICT = N/A
ICR = N/A

5.0 Design Input Data (Continued):

5.4 Component Data Notes:

COMPONENT RDAS (WRS-1-5A,5)

6 There is no output-calibrating instrument required and hence OCT and OCR are not applicable.

OCT = OCR = N/A

7 The console display system has a display that shows one place past the decimal point. The reading error is taken to ± the value of the last digit. Thus

INDR = ± 0.1 MW

8 RDAS is not required to function during or post seismic event. Therefore

SE = N/A

9 Per Reference 4, the normal ambient temperature for Accessible areas is 70°F to 105°F. Per Reference 4, the abnormal ambient temperature for Accessible areas is 40°F to 125°F. For conservatism, the largest change in ambient temperature can occur when lowest abnormal temperature is reached after calibrating the instrument at the highest normal temperature (65°F change in ambient temperature). The affect of a 65°F temperature delta is included in the Vendor's reference accuracy provided by Reference 25. Thus,

NTE = N/A

6.0 Computations and Analyses:

6.1 Component Accuracies:

Listed below are the applicable accuracy parameters from section 5.0 used in these calculations. Unless otherwise specified, the accuracy parameters listed below and the values calculated in these sections are bi-directional (+/-). Calculation results are shown rounded. Non-rounded calculation results are used as input to subsequent calculations.

Temperature Element Accuracy Parameters (Values in °F)

RA = ±0.45

Flow Element Accuracy Parameters (Values in "wc)

RA = ±10.8

Flow Transmitter Accuracy Parameters (Values in "wc)

RA = ±0.64
DE = ±1.14
Ab = ±0.64
NTE = ±0.74
SPE = ±1.11
ICT = ±0.4

RT41 Temperature Input Accuracy Parameters (Values in °F)

RA = ±0.02
Ab = ±0.02
ICT_{low} = ±0.002
ICT_{high} = ±0.007
INDR = ±0.005

PAI3 Analog Input Accuracy Parameters (Values in Vdc)

RA = ±0.00004
Ab = ±0.00004
INDR = ±0.0001

6.0 Computations and Analyses: (Continued)

6.1 Component Accuracies:

GIO4 Analog Output Accuracy Parameters (Values in mAdc)

RA = ±0.02
Ab = ±0.02
OCT = ±0.011

Quadrant Flow Recorder Accuracy Parameters (Values in gpm)

RA = ±16
Ab = ±16
INDR = ±1

Total Flow Recorder Accuracy Parameters (Values in gpm)

RA = ±64
Ab = ±100
INDR = ±100

Delta Temperature Recorder Accuracy Parameters (Values in °F)

RA = ±0.06
Ab = ±0.1
INDR = ±0.1

Inlet & Outlet Temp. Recorder Accuracy Parameters (Values in °F)

RA = ±0.1
Ab = ±0.1
INDR = ±0.1

Quadrant Outlet Temp. Recorder Accuracy Parameters (Values in °F)

RA = ±0.2
Ab = ±0.2
INDR = ±0.1

6.0 Computations and Analyses: (Continued)

6.1 Component Accuracies:

Quadrant Power Recorder Accuracy Parameters (Values in MW)

RA = ±0.1
Ab = ±0.1
INDR = ±0.1

Total Power Recorder Accuracy Parameters (Values in MW)

RA = ±0.35
Ab = ±0.4
INDR = ±0.1

RDAS Quadrant Flow Accuracy Parameters (Values in gpm)

RA = ±22.4
Ab = ±23
INDR = ±1

RDAS Total Flow Accuracy Parameters (Values in gpm)

RA = ±89.6
Ab = ±90
INDR = ±1

RDAS Delta Temperature Accuracy Parameters (Values in °F)

RA = ±0.08
Ab = ±0.1
INDR = ±0.1

RDAS Inlet & Outlet Temp. Accuracy Parameters (Values in °F)

RA = ±0.14
Ab = ±0.2
INDR = ±0.1

6.0 Computations and Analyses: (Continued)

6.1 Component Accuracies:

RDAS Quadrant Outlet Temp. Accuracy Parameters (Values in °F)

RA	= ±0.28
Ab	= ±0.3
INDR	= ±0.1

RDAS Quadrant Power Accuracy Parameters (Values in MW)

RA	= ±0.14
Ab	= ±0.2
INDR	= ±0.1

RDAS Total Power Accuracy Parameters (Values in MW)

RA	= ±0.49
Ab	= ±0.5
INDR	= ±0.1

6.0 Computations and Analyses:

6.1 Component Accuracies: (Continued)

Sensitivity Analysis ("wc)

The conversion from uncertainties expressed in "wc to gpm is dependent on where in the instrument range the uncertainties are applied. This is due to the flow measurement being derived from the flow element differential pressure using a square root rather than linear function. As the flow decreases, each unit of differential pressure represents a larger flow. Based on data found on Reference 39, individual Quadrant coolant flow is no less than 10,400 gpm. To find the orifice differential pressure at 10,400 gpm:

$$\Delta P = (10400gpm/16000gpm)^2 * 570"wc = 240.8"wc$$

To find GPM uncertainty for each "wc uncertainty:

$$\pm 1"wc = 10400gpm - [(239.8"wc/570"wc)^{1/2} * 16000gpm)$$

$$\underline{\pm 1"wc = \pm 22.16\ gpm}$$

Sensitivity Analysis (GPM)

Conversion of uncertainties in gpm to MW can be found by incrementing the gpm value in the waterpower calculation by 1 and subtracting the differences in resultant MW results. The equation used to determine MW is:

$$Q = M/160000 * \Delta T[23.68-(0.003333 * T_{out})]$$

where;

Q = thermal power in MW
M = coolant flow in gpm
ΔT = coolant outlet temperature less coolant inlet temperature
T_{out} = coolant outlet temperature

This equation was extracted from the AZONIX 1000 configuration details, dated 06/26/92. Sensitivity iterations were performed using this equation. The inputs and results are shown on Reference 40. As expected, an increase in 1 GPM results in a larger MW increase at higher coolant ΔT due to the increase of latent heat.

6.0 Computations and Analyses:

6.1 Component Accuracies: (Continued)

Sensitivity Analysis (GPM) (cont.)

For conservatism, the MW value per change in GPM at full quadrant power will be used. Thus, to find MW uncertainty for each gpm uncertainty:

± 1 gpm = ± 0.00538 MW

Sensitivity Analysis (ºF)

Sensitivity iterations were also performed for results of incremental changes to Coolant inlet and outlet temperatures to determine the impact to the resultant MW. Unlike the GPM change iterations, the change in MW due to the change in coolant temperature is not constant, increasing as power decreases. Changes in outlet temperature at high coolant flows result in larger changes in MWs, increasing as power level decreases. Uncertainties are only a concern near full power. However, for conservatism, the MW change due to a decrease in outlet temperature at low power will be used for calculating the MW uncertainties from both inlet and outlet temperature uncertainties. Thus, to find MW uncertainty for each inlet and outlet ºF uncertainty:

± 1 ºF = ± 1.62 MW

6.0 Computations and Analyses:

6.1 Component Accuracies (Continued):

Temperature Element (RTD)

Normal Measurable Accuracy

e_{mTE} = N/A

Normal Accuracy

e_{TE} = ± RA_{TE}

e_{TE} = ± 0.45 °F

convert to MW:

e_{TE} = ± 0.45 °F * 1.62 MW/1 °F

e_{TE} = ± 0.73 MW

Acceptance Band

Ab_{TE}= N/A

6.0 Computations and Analyses:

6.1 Component Accuracies: (Continued)

Flow Element

Normal Measurable Accuracy

e_{mFE} = N/A

Normal Accuracy

e_{FE} = ± RA_{FE}

e_{FE} = ± 10.8 "WC

convert to gpm & MW:

e_{FE} = ± 10.8"WC * 22.16 gpm/1"wc

e_{FE} = ± 239 gpm

e_{FE} = ± 239 gpm * 0.00538 MW/1 gpm

e_{FE} = ± 1.29 MW

Acceptance Band

Ab_{RE} = N/A

6.0 Computations and Analyses:

6.1 Component Accuracies (Continued):

Pressure Transmitter

Normal Measurable Accuracy

$e_{mT} = \pm\ [RA_T^2 + NTE_T^2 + DE_T^2 + ICT_T^2 + Ab_T^2]^{1/2}$

$e_{mT} = \pm\ [0.64^2 + 0.74^2 + 1.14^2 + 0.4^2 + 0.64^2]^{1/2}$

$e_{mT} = \pm 1.68$ "wc

$e_{mT} = \pm 1.68$ "wc
$= \pm 1.68/570 \times 16$ mA
$= \pm 0.047$ mA

convert to gpm & MW:

$e_{mT} = \pm 1.68$ "WC * 22.16 gpm/1 "wc

$e_{mT} = \pm 37$ gpm

$e_{mT} = \pm 37$ gpm * 0.00538 MW/1 gpm

$e_{mT} = \pm 0.2$ MW

Normal Accuracy

$e_T = \pm[e_{mT}^2 + SPE_T^2]^{1/2}$

$e_T = \pm[1.68^2 + 1.11^2]^{1/2}$

$e_T = \pm 2.01$ "wc

convert to gpm & MW:

$e_T = \pm 2.01$ "WC * 22.16 gpm/1 "wc

$e_T = \pm 45$ gpm

$e_T = \pm 45$ gpm * 0.00538 MW/1 gpm

$e_T = \pm 0.24$ MW

Acceptance Band

$Ab_T = \pm 0.64$ "wc $= \pm 0.11\%$ of span

convert to gpm & MW:

$Ab_T = \pm 0.64$ "WC * 22.16 gpm/1 "wc

$Ab_T = \pm 14$ gpm

$Ab_T = \pm 14$ gpm * 0.00538 MW/1 gpm

$Ab_T = \pm 0.08$ MW

6.0 Computations and Analyses:

6.1 Component Accuracies (Continued):

WPC RT41 Input Card

Normal Measurable Accuracy

$e_{mRT41} = \pm[RA_{RT41}^2 + ICT_{lowRT41}^2 + ICT_{highRT41}^2 + INDR_{highRT41}^2 + Ab_{RT41}^2]^{1/2}$

$e_{mRT41} = \pm[0.004^2 + 0.0005^2 + 0.0015^2 + 0.001^2 + 0.004^2]^{1/2}$

$e_{mRT41} = \pm 0.006$ ohms

convert to ºF & MW:

$e_{mRT41} = \pm 0.006$ ohms * 4.545 ºF/1 ohm

$e_{mRT41} = \pm 0.03$ ºF

$e_{mRT41} = \pm 0.03$ ºF * 1.62 MW/1 ºF

$e_{mRT41} = \pm 0.05$ MW

Normal Accuracy

$e_{RT41} = \pm e_{mRT41}$

Acceptance Band

$Ab_{RT41} = \pm 0.004$ ohms

convert to ºF & MW:

$Ab_{RT41} = \pm 0.004$ ohms * 4.545 ºF/1 ohm

$Ab_{RT41} = \pm 0.02$ ºF

$Ab_{RT41} = \pm 0.02$ ºF * 1.62 MW/1 ºF

$Ab_{RT41} = \pm 0.03$ MW

6.0 Computations and Analyses:

6.1 Component Accuracies (Continued):

WPC PAI3 Input Card

Normal Measurable Accuracy

$e_{mPAI3} = \pm[RA_{PAI3}^2 + INDR_{PAI3}^2 + Ab_{PAI3}^2]^{1/2}$

$e_{mPAI3} = \pm[0.00004^2 + 0.0001^2 + 0.00004^2]^{1/2}$

$e_{mPAI3} = \pm 0.0001$ Vdc

$e_{mPAI3} = \pm 0.0001$ Vdc / 0.8 Vdc = ± 0.014% of span

convert to "wc, gpm & MW:

$e_{mPAI3} = \pm 0.014\% * 570$ "WC

$e_{mPAI3} = \pm 0.08$ "wc

$e_{mPAI3} = \pm 0.08$ "WC * 22.16 gpm/1 "wc

$e_{mPAI3} = \pm 2$ gpm

$e_{mPAI3} = \pm 2$ gpm * 0.00538 MW/1 gpm

$e_{mPAI3} = \pm 0.01$ MW

Normal Accuracy

$e_{PAI3} = \pm e_{mPAI3}$

Acceptance Band

$Ab_{PAI3} = \pm 0.00004$ Vdc

$Ab_{PAI3} = \pm 0.00004$ Vdc / 0.8 Vdc = ± 0.005% of span

convert to "wc, gpm & MW:

$Ab_{PAI3} = \pm 0.005\% * 570$ "WC

$Ab_{PAI3} = \pm 0.03$ "wc

$Ab_{PAI3} = \pm 0.03$ "WC * 22.16 gpm/1 "wc

$Ab_{PAI3} = \pm 1$ gpm

$Ab_{PAI3} = \pm 1$ gpm * 0.00538 MW/1 gpm

$Ab_{PAI3} = \pm 0.005$ MW

6.0 Computations and Analyses:

6.1 Component Accuracies (Continued):

WPC GIO4 Output Card

Normal Measurable Accuracy

$e_{mGIO4} = \pm[RA_{GIO4}^2 + OCT_{GIO4}^2 + Ab_{GIO4}^2]^{1/2}$

$e_{mGIO4} = \pm[0.02^2 + 0.011^2 + 0.02^2]^{1/2}$

$e_{mGIO4} = \pm 0.03$ mAdc

$e_{mGIO4} = \pm 0.03$ mAdc / 20 mAdc = ± 0.15% of span

convert to gpm, ºF & MW:

$e_{mGIO4} = \pm 0.15\% * 16000$ gpm

$e_{mGIO4} = \pm 24$ gpm quadrant flow

$e_{mGIO4} = \pm 0.15\% * 64000$ gpm

$e_{mGIO4} = \pm 96$ gpm total flow

$e_{mGIO4} = \pm 0.15\% * 60$ ºF

$e_{mGIO4} = \pm 0.09$ ºF ΔT

$e_{mGIO4} = \pm 0.15\% * 100$ ºF

$e_{mGIO4} = \pm 0.15$ ºF inlet & outlet T

$e_{mGIO4} = \pm 0.15\% * 200$ ºF

$e_{mGIO4} = \pm 0.3$ ºF quadrant outlet T

$e_{mGIO4} = \pm 0.15\% * 100$ MW

$e_{mGIO4} = \pm 0.15$ MW quadrant power

$e_{mGIO4} = \pm 0.15\% * 350$ MW

$e_{mGIO4} = \pm 0.53$ MW total power

Normal Accuracy

$e_{GIO4} = \pm e_{mGIO4}$

Acceptance Band

$Ab_{GIO4} = \pm 0.02$ mAdc

$AB_{GIO4} = \pm 0.02$ mAdc / 20 mAdc = ± 0.1% of span

convert to gpm, ºF & MW:

$Ab_{GIO4} = \pm 0.1\% * 16000$ gpm

$Ab_{GIO4} = \pm 16$ gpm quadrant flow

$Ab_{GIO4} = \pm 0.1\% * 64000$ gpm

$Ab_{GIO4} = \pm 64$ gpm total flow

6.0 Computations and Analyses:

6.1 Component Accuracies (Continued):

WPC GIO4 Output Card (cont.)

Ab_{GIO4} = ± 0.1% * 60 ºF

Ab_{GIO4} = ± 0.06 ºF ΔT

Ab_{GIO4} = ± 0.1% * 100 ºF

Ab_{GIO4} = ± 0.1 ºF inlet & outlet T

Ab_{GIO4} = ± 0.1% * 200 ºF

Ab_{GIO4} = ± 0.2 ºF quadrant outlet T

Ab_{GIO4} = ± 0.1% * 100 MW

Ab_{GIO4} = ± 0.1 MW quadrant power

Ab_{GIO4} = ± 0.1% * 350 MW

Ab_{GIO4} = ± 0.35 MW quadrant power

6.0 Computations and Analyses:

6.1 Component Accuracies (Continued):

Quadrant Flow Recorder

Normal Measurable Accuracy

$e_{mQFR} = \pm[RA_{QFR}^2 + INDR_{QFR}^2 + Ab_{QFR}^2]^{1/2}$

$e_{mQFR} = \pm[16^2 + 1^2 + 16^2]^{1/2}$

$e_{mQFR} = \pm 23$ gpm

Normal Accuracy

$e_{QFR} = \pm e_{mQFR}$

Acceptance Band

$Ab_{QFR} = \pm 16$ gpm

Total Flow Recorder

Normal Measurable Accuracy

$e_{mTFR} = \pm[RA_{TFR}^2 + INDR_{TFR}^2 + Ab_{TFR}^2]^{1/2}$

$e_{mTFR} = \pm[64^2 + 100^2 + 100^2]^{1/2}$

$e_{mTFR} = \pm 155$ gpm

Normal Accuracy

$e_{TFR} = \pm e_{mTFR}$

Acceptance Band

$Ab_{TFR} = \pm 100$ gpm

6.0 Computations and Analyses:

6.1 Component Accuracies (Continued):

Differential Temperature Recorder

Normal Measurable Accuracy

$e_{mDTR} = \pm[RA_{DTR}^2 + INDR_{DTR}^2 + Ab_{DTR}^2]^{1/2}$

$e_{mDTR} = \pm[0.06^2 + 0.1^2 + 0.1^2]^{1/2}$

$e_{mDTR} = \pm 0.15\ °F$

Normal Accuracy

$e_{DTR} = \pm e_{mDTR}$

Acceptance Band

$Ab_{DTR} = \pm 0.1\ °F$

6.0 Computations and Analyses:

6.1 Component Accuracies (Continued):

Inlet & Outlet Temperature Recorder

Normal Measurable Accuracy

$e_{mTR} = \pm[RA_{TR}^2 + INDR_{TR}^2 + Ab_{TR}^2]^{1/2}$

$e_{mTR} = \pm[0.1^2 + 0.1^2 + 0.1^2]^{1/2}$

$e_{mTR} = \pm 0.2\ °F$

Normal Accuracy

$e_{TR} = \pm e_{mTR}$

Acceptance Band

$Ab_{TR} = \pm 0.1\ °F$

Quadrant Outlet Temperature Recorder

Normal Measurable Accuracy

$e_{mTR} = \pm[RA_{TR}^2 + INDR_{TR}^2 + Ab_{TR}^2]^{1/2}$

$e_{mTR} = \pm[0.2^2 + 0.1^2 + 0.2^2]^{1/2}$

$e_{mTR} = \pm 0.3\ °F$

Normal Accuracy

$e_{TR} = \pm e_{mTR}$

Acceptance Band

$Ab_{TR} = \pm 0.2\ °F$

6.0 Computations and Analyses:

6.1 Component Accuracies (Continued):

Quadrant Water Power Recorder

Normal Measurable Accuracy

$e_{mQWR} = \pm[RA_{QWR}^2 + INDR_{QWR}^2 + Ab_{QWR}^2]^{1/2}$

$e_{mQWR} = \pm[0.1^2 + 0.1^2 + 0.1^2]^{1/2}$

$e_{mQWR} = \pm 0.17$ MW

Normal Accuracy

$e_{QWR} = \pm e_{mQWR}$

Acceptance Band

$Ab_{QWR} = \pm 0.1$ MW

Total Water Power Recorder

Normal Measurable Accuracy

$e_{mTWR} = \pm[RA_{TWR}^2 + INDR_{TWR}^2 + Ab_{TWR}^2]^{1/2}$

$e_{mTWR} = \pm[0.35^2 + 0.1^2 + 0.4^2]^{1/2}$

$e_{mTWR} = \pm 0.54$ MW

Normal Accuracy

$e_{TWR} = \pm e_{mQWR}$

Acceptance Band

$Ab_{TWR} = \pm 0.4$ MW

6.0 Computations and Analyses:

6.1 Component Accuracies (Continued):

RDAS Quadrant Flow

Normal Measurable Accuracy

$e_{mRDASQF} = \pm[RA_{RDASQF}^2 + INDR_{RDASQF}^2 + Ab_{RDASQF}^2]^{1/2}$

$e_{mRDASQF} = \pm[22.4^2 + 1^2 + 23^2]^{1/2}$

$e_{mRDASQF} = \pm 32$ gpm

Normal Accuracy

$e_{RDASQF} = \pm e_{mRDASQF}$

Acceptance Band

$Ab_{RDASQF} = \pm 23$ gpm

RDAS Total Flow

Normal Measurable Accuracy

$e_{mRDASTF} = \pm[RA_{RDASTF}^2 + INDR_{RDASTF}^2 + Ab_{RDASTF}^2]^{1/2}$

$e_{mRDASTF} = \pm[89.6^2 + 1^2 + 90^2]^{1/2}$

$e_{mRDASTF} = \pm 127$ gpm

Normal Accuracy

$e_{RDASTF} = \pm e_{mRDASTF}$

Acceptance Band

$Ab_{RDASTF} = \pm 90$ gpm

6.0 Computations and Analyses:

6.1 Component Accuracies (Continued):

RDAS Differential Temperature

Normal Measurable Accuracy

$e_{mRDASDT} = \pm[RA_{RDASDT}^2 + INDR_{RDASDT}^2 + Ab_{RDASDT}^2]^{1/2}$

$e_{mRDASDT} = \pm[0.08^2 + 0.1^2 + 0.1^2]^{1/2}$

$e_{mRDASDT} = \pm 0.16\ ^{\circ}F$

Normal Accuracy

$e_{RDASDT} = \pm e_{mRDASDT}$

Acceptance Band

$Ab_{RDASDT} = \pm 0.1\ ^{\circ}F$

6.0 Computations and Analyses:

6.1 Component Accuracies (Continued):

RDAS Inlet & Outlet Temperature

Normal Measurable Accuracy

$e_{mRDAST} = \pm[RA_{RDAST}^2 + INDR_{RDAST}^2 + Ab_{RDAST}^2]^{1/2}$.

$e_{mRDAST} = \pm[0.14^2 + 0.1^2 + 0.2^2]^{1/2}$

$e_{mRDAST} = \pm 0.26$ ºF

Normal Accuracy

$e_{RDAST} = \pm e_{mRDAST}$

Acceptance Band

$Ab_{RDAST} = \pm 0.2$ ºF

RDAS Quadrant Outlet Temperature

Normal Measurable Accuracy

$e_{mRDAST} = \pm[RA_{RDAST}^2 + INDR_{RDAST}^2 + Ab_{RDAST}^2]^{1/2}$

$e_{mRDAST} = \pm[0.28^2 + 0.1^2 + 0.3^2]^{1/2}$

$e_{mRDAST} = \pm 0.42$ ºF

Normal Accuracy

$e_{RDAST} = \pm e_{mRDAST}$

Acceptance Band

$Ab_{RDAST} = \pm 0.3$ ºF

6.0 Computations and Analyses:

6.1 Component Accuracies (Continued):

RDAS Quadrant Water Power

Normal Measurable Accuracy

$e_{mRDASQW} = \pm[RA_{RDASQW}^2 + INDR_{RDASQW}^2 + Ab_{RDASQW}^2]^{1/2}$

$e_{mRDASQW} = \pm[0.14^2 + 0.1^2 + 0.2^2]^{1/2}$

$e_{mRDASQW} = \pm 0.26$ MW

Normal Accuracy

$e_{RDASQW} = \pm e_{mRDASQW}$

Acceptance Band

$Ab_{RDASQW} = \pm 0.2$ MW

RDAS Total Water Power

Normal Measurable Accuracy

$e_{mRDASTW} = \pm[RA_{RDASTW}^2 + INDR_{RDASTW}^2 + Ab_{RDASTW}^2]^{1/2}$

$e_{mRDASTW} = \pm[0.49^2 + 0.1^2 + 0.5^2]^{1/2}$

$e_{mRDASTW} = \pm 0.71$ MW

Normal Accuracy

$e_{RDASTW} = \pm e_{mRDASTW}$

Acceptance Band

$Ab_{RDASTW} = \pm 0.5$ MW

6.0 Computations and Analyses:

6.2 Loop Accuracies:

Quadrant Flow Recorder Loop Accuracy

Loop Normal Measurable Accuracy

$TLU_{mQFR} = \pm(e_{mFE}^2 + e_{mT}^2 + e_{mPAI3}^2 + e_{mGAIO4}^2 + e_{mQFR}^2)^{1/2}$

$TLU_{mQFR} = \pm(0.0^2 + 37^2 + 2^2 + 24^2 + 23^2)^{1/2}$

$TLU_{mQFR} = \pm 50$ gpm

Loop Normal Accuracy

$TLU_{QFR} = \pm(e_{FE}^2 + e_T^2 + e_{PAI3}^2 + e_{GAIO4}^2 + e_{QFR}^2)^{1/2}$

$TLU_{QFR} = \pm(239^2 + 45^2 + 2^2 + 24^2 + 23^2)^{1/2}$

$TLU_{QFR} = \pm 245$ gpm

Loop Acceptance Band

$TLUAb_{QFR} = \pm(Ab_{FE}^2 + Ab_T^2 + Ab_{PAI3}^2 + Ab_{GAIO4}^2 + Ab_{QFR}^2)^{1/2}$

$TLUAb_{QFR} = \pm(0.0^2 + 14^2 + 1^2 + 16^2 + 16^2)^{1/2}$

$TLUAb_{QFR} = \pm 27$ gpm

Quadrant Flow RDAS Loop Accuracy

Loop Normal Measurable Accuracy

$TLU_{mQFR} = \pm(e_{mFE}^2 + e_{mT}^2 + e_{mPAI3}^2 + e_{mGAIO4}^2 + e_{mRDASQF}^2)^{1/2}$

$TLU_{mQFR} = \pm(0.0^2 + 37^2 + 2^2 + 24^2 + 32^2)^{1/2}$

$TLU_{mQFR} = \pm 55$ gpm

Loop Normal Accuracy

$TLU_{QFR} = \pm(e_{FE}^2 + e_T^2 + e_{PAI3}^2 + e_{GAIO4}^2 + e_{RDASQF}^2)^{1/2}$

$TLU_{QFR} = \pm(239^2 + 45^2 + 2^2 + 24^2 + 32^2)^{1/2}$

$TLU_{QFR} = \pm 246$ gpm

Loop Acceptance Band

$TLUAb_{QFR} = \pm(Ab_{FE}^2 + Ab_T^2 + Ab_{PAI3}^2 + Ab_{GAIO4}^2 + Ab_{RDASQF}^2)^{1/2}$

$TLUAb_{QFR} = \pm(0.0^2 + 14^2 + 1^2 + 16^2 + 23^2)^{1/2}$

$TLUAb_{QFR} = \pm 31$ gpm

6.0 Computations and Analyses:

6.2 Loop Accuracies:

Total Flow Recorder Loop Accuracy

Loop Normal Measurable Accuracy

$TLU_{mTFR} = \pm[4 \times (e_{mFE}^2 + e_{mT}^2 + e_{mPAI3}^2) + e_{mGAIO4}^2 + e_{mTFR}^2]^{1/2}$

$TLU_{mTFR} = \pm[4 \times (0.0^2 + 37^2 + 2^2) + 24^2 + 155^2]^{1/2}$

$TLU_{mTFR} = \pm 173$ gpm

Loop Normal Accuracy

$TLU_{TFR} = \pm[4 \times (e_{FE}^2 + e_T^2 + e_{PAI3}^2) + e_{GAIO4}^2 + e_{TFR}^2]^{1/2}$

$TLU_{TFR} = \pm[4 \times (239^2 + 45^2 + 2^2) + 24^2 + 155^2]^{1/2}$

$TLU_{TFR} = \pm 511$ gpm

Loop Acceptance Band

$TLUAb_{TFR} = \pm[4 \times (Ab_{FE}^2 + Ab_T^2 + Ab_{PAI3}^2) + Ab_{GAIO4}^2 + Ab_{TFR}^2]^{1/2}$

$TLUAb_{TFR} = \pm[4 \times (0.0^2 + 14^2 + 1^2) + 16^2 + 100^2]^{1/2}$

$TLUAb_{TFR} = \pm 105$ gpm

Total Flow RDAS Loop Accuracy

Loop Normal Measurable Accuracy

$TLU_{mRDASTF} = \pm[4 \times (e_{mFE}^2 + e_{mT}^2 + e_{mPAI3}^2) + e_{mGAIO4}^2 + e_{mRDASTF}^2]^{1/2}$

$TLU_{mRDASTF} = \pm[4 \times (0.0^2 + 37^2 + 2^2) + 24^2 + 127^2]^{1/2}$

$TLU_{mRDASTF} = \pm 149$ gpm

Loop Normal Accuracy

$TLU_{RDASTF} = \pm[4 \times (e_{FE}^2 + e_T^2 + e_{PAI3}^2) + e_{GAIO4}^2 + e_{RDASTF}^2]^{1/2}$

$TLU_{RDASTF} = \pm[4 \times (239^2 + 45^2 + 2^2) + 24^2 + 127^2]^{1/2}$

$TLU_{RDASTF} = \pm 503$ gpm

Loop Acceptance Band

$TLUAb_{RDASTF} = \pm[4 \times (Ab_{FE}^2 + Ab_T^2 + Ab_{PAI3}^2) + Ab_{GAIO4}^2 + Ab_{RDASTF}^2]^{1/2}$

$TLUAb_{RDASTF} = \pm[4 \times (0.0^2 + 14^2 + 1^2) + 16^2 + 90^2]^{1/2}$

$TLUAb_{RDASTF} = \pm 96$ gpm

6.0 Computations and Analyses:

6.2 Loop Accuracies:

Quadrant Outlet Temperature Recorder Loop Accuracy

Loop Normal Measurable Accuracy

$TLU_{mOTR} = \pm(e_{mTE}^2 + e_{mRT41}^2 + e_{mGAIO4}^2 + e_{mTR}^2)^{1/2}$

$TLU_{mOTR} = \pm(0.0^2 + 0.03^2 + 0.3^2 + 0.3^2)^{1/2}$

$TLU_{mOTR} = \pm 0.43$ ºF

Loop Normal Accuracy

$TLU_{OTR} = \pm(e_{TE}^2 + e_{RT41}^2 + e_{GAIO4}^2 + e_{TR}^2)^{1/2}$

$TLU_{OTR} = \pm(0.45^2 + 0.03^2 + 0.3^2 + 0.3^2)^{1/2}$

$TLU_{OTR} = \pm 0.62$ ºF

Loop Acceptance Band

$TLUAb_{OTR} = \pm(Ab_{TE}^2 + Ab_{RT41}^2 + Ab_{GAIO4}^2 + Ab_{TR}^2)^{1/2}$

$TLUAb_{OTR} = \pm(0.0^2 + 0.02^2 + 0.2^2 + 0.2^2)^{1/2}$

$TLUAb_{OTR} = \pm 0.28$ ºF

Quadrant Outlet Temperature RDAS Loop Accuracy

Loop Normal Measurable Accuracy

$TLU_{mRDASOT} = \pm(e_{mTE}^2 + e_{mRT41}^2 + e_{mGAIO4}^2 + e_{mRDAST}^2)^{1/2}$

$TLU_{mRDASOT} = \pm(0.0^2 + 0.03^2 + 0.3^2 + 0.42^2)^{1/2}$

$TLU_{mRDASOT} = \pm 0.52$ ºF

Loop Normal Accuracy

$TLU_{RDASOT} = \pm(e_{TE}^2 + e_{RT41}^2 + e_{GAIO4}^2 + e_{RDAST}^2)^{1/2}$

$TLU_{RDASOT} = \pm(0.45^2 + 0.03^2 + 0.3^2 + 0.42^2)^{1/2}$

$TLU_{RDASOT} = \pm 0.69$ ºF

Loop Acceptance Band

$TLUAb_{RDASOT} = \pm(Ab_{TE}^2 + Ab_{RT41}^2 + Ab_{GAIO4}^2 + Ab_{RDAST}^2)^{1/2}$

$TLUAb_{RDASOT} = \pm(0.0^2 + 0.02^2 + 0.2^2 + 0.3^2)^{1/2}$

$TLUAb_{RDASOT} = \pm 0.36$ ºF

6.0 Computations and Analyses:

6.2 Loop Accuracies:

Outlet Temperature Recorder Loop Accuracy

Loop Normal Measurable Accuracy

$TLU_{mOTR} = \pm(e_{mTE}^2 + e_{mRT41}^2 + e_{mGAIO4}^2 + e_{mTR}^2)^{1/2}$

$TLU_{mOTR} = \pm(0.0^2 + 0.03^2 + 0.15^2 + 0.2^2)^{1/2}$

$TLU_{mOTR} = \pm 0.25$ ºF

Loop Normal Accuracy

$TLU_{OTR} = \pm(e_{TE}^2 + e_{RT41}^2 + e_{GAIO4}^2 + e_{TR}^2)^{1/2}$

$TLU_{OTR} = \pm(0.45^2 + 0.03^2 + 0.15^2 + 0.2^2)^{1/2}$

$TLU_{OTR} = \pm 0.52$ ºF

Loop Acceptance Band

$TLUAb_{OTR} = \pm(Ab_{TE}^2 + Ab_{RT41}^2 + Ab_{GAIO4}^2 + Ab_{TR}^2)^{1/2}$

$TLUAb_{OTR} = \pm(0.0^2 + 0.02^2 + 0.1^2 + 0.1^2)^{1/2}$

$TLUAb_{OTR} = \pm 0.14$ ºF

Outlet Temperature RDAS Loop Accuracy

Loop Normal Measurable Accuracy

$TLU_{mRDASOT} = \pm(e_{mTE}^2 + e_{mRT41}^2 + e_{mGAIO4}^2 + e_{mRDAST}^2)^{1/2}$

$TLU_{mRDASOT} = \pm(0.0^2 + 0.03^2 + 0.15^2 + 0.26^2)^{1/2}$

$TLU_{mRDASOT} = \pm 0.30$ ºF

Loop Normal Accuracy

$TLU_{RDASOT} = \pm(e_{TE}^2 + e_{RT41}^2 + e_{GAIO4}^2 + e_{RDAST}^2)^{1/2}$

$TLU_{RDASOT} = \pm(0.45^2 + 0.03^2 + 0.15^2 + 0.26^2)^{1/2}$

$TLU_{RDASOT} = \pm 0.54$ ºF

Loop Acceptance Band

$TLUAb_{RDASOT} = \pm(Ab_{TE}^2 + Ab_{RT41}^2 + Ab_{GAIO4}^2 + Ab_{RDAST}^2)^{1/2}$

$TLUAb_{RDASOT} = \pm(0.0^2 + 0.02^2 + 0.1^2 + 0.2^2)^{1/2}$

$TLUAb_{RDASOT} = \pm 0.22$ ºF

6.0 Computations and Analyses:

6.2 Loop Accuracies:

Inlet Temperature Recorder Loop Accuracy

Loop Normal Measurable Accuracy

$TLU_{mITR} = \pm[4 \times (e_{mTE}^2 + e_{mRT41}^2) + e_{mGAIO4}^2 + e_{mTR}^2]^{1/2}$

$TLU_{mITR} = \pm[4 \times (0.0^2 + 0.03^2) + 0.15^2 + 0.2^2]^{1/2}$

$\underline{TLU_{mITR} = \pm 0.26\ ^{\circ}F}$

Loop Normal Accuracy

$TLU_{ITR} = \pm[4 \times (e_{TE}^2 + e_{RT41}^2) + e_{GAIO4}^2 + e_{TR}^2]^{1/2}$

$TLU_{ITR} = \pm[4 \times (0.45^2 + 0.03^2) + 0.15^2 + 0.2^2]^{1/2}$

$\underline{TLU_{ITR} = \pm 0.94\ ^{\circ}F}$

Loop Acceptance Band

$TLUAb_{ITR} = \pm[4 \times (Ab_{TE}^2 + Ab_{RT41}^2) + Ab_{GAIO4}^2 + Ab_{TR}^2]^{1/2}$

$TLUAb_{ITR} = \pm[4 \times (0.0^2 + 0.02^2) + 0.1^2 + 0.1^2]^{1/2}$

$\underline{TLUAb_{ITR} = \pm 0.15\ ^{\circ}F}$

Inlet Temperature RDAS Loop Accuracy

Loop Normal Measurable Accuracy

$TLU_{mRDASIT} = \pm[4 \times (e_{mTE}^2 + e_{mRT41}^2) + e_{mGAIO4}^2 + e_{mRDAST}^2]^{1/2}$

$TLU_{mRDASIT} = \pm[4 \times (0.0^2 + 0.03^2) + 0.15^2 + 0.26^2]^{1/2}$

$\underline{TLU_{mRDASIT} = \pm 0.31\ ^{\circ}F}$

Loop Normal Accuracy

$TLU_{RDASIT} = \pm[4 \times (e_{TE}^2 + e_{RT41}^2) + e_{GAIO4}^2 + e_{RDAST}^2]^{1/2}$

$TLU_{RDASIT} = \pm[4 \times (0.45^2 + 0.03^2) + 0.15^2 + 0.26^2]^{1/2}$

$\underline{TLU_{RDASIT} = \pm 0.95\ ^{\circ}F}$

Loop Acceptance Band

$TLUAb_{RDASIT} = \pm[4 \times (Ab_{TE}^2 + Ab_{RT41}^2) + Ab_{GAIO4}^2 + Ab_{RDAST}^2]^{1/2}$

$TLUAb_{RDASIT} = \pm[4 \times (0.0^2 + 0.02^2) + 0.1^2 + 0.2^2]^{1/2}$

$\underline{TLUAb_{RDASIT} = \pm 0.23\ ^{\circ}F}$

6.0 Computations and Analyses:

6.2 Loop Accuracies:

Differential Temperature Recorder Loop Accuracy

Loop Normal Measurable Accuracy

$TLU_{mDTR} = \pm[5 \times (e_{mTE}^2 + e_{mRT41}^2) + e_{mGAIO4}^2 + e_{mDTR}^2]^{1/2}$

$TLU_{mDTR} = \pm[5 \times (0.0^2 + 0.03^2) + 0.09^2 + 0.15^2]^{1/2}$

$TLU_{mDTR} = \pm 0.19$ ºF

Loop Normal Accuracy

$TLU_{DTR} = \pm[5 \times (e_{TE}^2 + e_{RT41}^2) + e_{GAIO4}^2 + e_{DTR}^2]^{1/2}$

$TLU_{DTR} = \pm[5 \times (0.45^2 + 0.03^2) + 0.09^2 + 0.15^2]^{1/2}$

$TLU_{DTR} = \pm 1.02$ ºF

Loop Acceptance Band

$TLUAb_{DTR} = \pm[5 \times (Ab_{TE}^2 + Ab_{RT41}^2) + Ab_{GAIO4}^2 + Ab_{DTR}^2]^{1/2}$

$TLUAb_{DTR} = \pm[5 \times (0.0^2 + 0.02^2) + 0.06^2 + 0.1^2]^{1/2}$

$TLUAb_{DTR} = \pm 0.12$ ºF

Differential Temperature RDAS Loop Accuracy

Loop Normal Measurable Accuracy

$TLU_{mRDASDT} = \pm[5 \times (e_{mTE}^2 + e_{mRT41}^2) + e_{mGAIO4}^2 + e_{mRDASDT}^2]^{1/2}$

$TLU_{mRDASDT} = \pm[5 \times (0.0^2 + 0.03^2) + 0.09^2 + 0.16^2]^{1/2}$

$TLU_{mRDASDT} = \pm 0.2$ ºF

Loop Normal Accuracy

$TLU_{RDASDT} = \pm[5 \times (e_{TE}^2 + e_{RT41}^2) + e_{GAIO4}^2 + e_{RDASDT}^2]^{1/2}$

$TLU_{RDASDT} = \pm[5 \times (0.45^2 + 0.03^2) + 0.09^2 + 0.16^2]^{1/2}$

$TLU_{RDASDT} = \pm 1.03$ ºF

Loop Acceptance Band

$TLUAb_{RDASDT} = \pm[5 \times (Ab_{TE}^2 + Ab_{RT41}^2) + Ab_{GAIO4}^2 + Ab_{RDASDT}^2]^{1/2}$

$TLUAb_{RDASDT} = \pm[5 \times (0.0^2 + 0.02^2) + 0.06^2 + 0.1^2]^{1/2}$

$TLUAb_{RDASDT} = \pm 0.12$ ºF

6.0 Computations and Analyses:

6.2 Loop Accuracies:

Quadrant Water Power Recorder Loop Accuracy

Loop Normal Measurable Accuracy

$$TLU_{mQWR} = \pm[5 \times (e_{mTE}^2 + e_{mRT41}^2) + e_{mFE}^2 + e_{mT}^2 + e_{mPAI3}^2 + e_{mGAIO4}^2 + e_{mQWR}^2]^{1/2}$$

$$TLU_{mQWR} = \pm[5 \times (0.0^2 + 0.05^2) + 0.0^2 + 0.2^2 + 0.01^2 + 0.15^2 + 0.17^2]^{1/2}$$

$$\underline{TLU_{mQWR} = \pm 0.32 \text{ MW}}$$

Loop Normal Accuracy

$$TLU_{QWR} = \pm[5 \times (e_{TE}^2 + e_{RT41}^2) + e_{FE}^2 + e_T^2 + e_{PAI3}^2 + e_{GAIO4}^2 + e_{QWR}^2]^{1/2}$$

$$TLU_{QWR} = \pm[5 \times (0.73^2 + 0.05^2) + 1.29^2 + 0.24^2 + 0.01^2 + 0.15^2 + 0.17^2]^{1/2}$$

$$\underline{TLU_{QWR} = \pm 2.11 \text{ MW}}$$

Loop Acceptance Band

$$TLUAb_{QWR} = \pm[5 \times (Ab_{TE}^2 + Ab_{RT41}^2) + Ab_{FE}^2 + Ab_T^2 + Ab_{PAI3}^2 + Ab_{GAIO4}^2 + Ab_{QWR}^2]^{1/2}$$

$$TLUAb_{QWR} = \pm[5 \times (0.0^2 + 0.03^2) + 0.0^2 + 0.08^2 + 0.005^2 + 0.1 + 0.1^2]^{1/2}$$

$$\underline{TLUAb_{QWR} = \pm 0.18 \text{ MW}}$$

6.0 Computations and Analyses:

6.2 Loop Accuracies:

Quadrant Water Power RDAS Loop Accuracy

Loop Normal Measurable Accuracy

$$TLU_{mRDASQW} = \pm[5 \times (e_{mTE}^2 + e_{mRT41}^2) + e_{mFE}^2 + e_{mT}^2 + e_{mPAI3}^2 + e_{mGAIO4}^2 + e_{mRDASQW}^2]^{1/2}$$

$$TLU_{mRDASQW} = \pm[5 \times (0.0^2 + 0.05^2) + 0.0^2 + 0.2^2 + 0.01^2 + 0.15^2 + 0.26^2]^{1/2}$$

$$\underline{TLU_{mRDASQW} = \pm 0.38 \text{ MW}}$$

Loop Normal Accuracy

$$TLU_{RDASQW} = \pm[5 \times (e_{TE}^2 + e_{RT41}^2) + e_{FE}^2 + e_T^2 + e_{PAI3}^2 + e_{GAIO4}^2 + e_{RDASQW}^2]^{1/2}$$

$$TLU_{RDASQW} = \pm[5 \times (0.73^2 + 0.05^2) + 1.29^2 + 0.24^2 + 0.01^2 + 0.15^2 + 0.26^2]^{1/2}$$

$$\underline{TLU_{RDASQW} = \pm 2.12 \text{ MW}}$$

Loop Acceptance Band

$$TLUAb_{RDASQW} = \pm[5 \times (Ab_{TE}^2 + Ab_{RT41}^2) + Ab_{FE}^2 + Ab_T^2 + Ab_{PAI3}^2 + Ab_{GAIO4}^2 + Ab_{RDASQW}^2]^{1/2}$$

$$TLUAb_{RDASQW} = \pm[5 \times (0.0^2 + 0.03^2) + 0.0^2 + 0.08^2 + 0.005^2 + 0.1^2 + 0.2^2]^{1/2}$$

$$\underline{TLUAb_{RDASQW} = \pm 0.25 \text{ MW}}$$

6.0 Computations and Analyses:

6.2 Loop Accuracies:

Total Water Power Recorder Loop Accuracy

Loop Normal Measurable Accuracy

$$TLU_{mTWR} = \pm[5 \times (e_{mTE}^2 + e_{mRT41}^2) + 4 \times (e_{mFE}^2 + e_{mT}^2 + e_{mPAI3}^2) + e_{mGAIO4}^2 + e_{mTWR}^2]^{1/2}$$

$$TLU_{mTWR} = \pm[5 \times (0.0^2 + 0.05^2) + 4 \times (0.0^2 + 0.2^2 + 0.01^2) + 0.53^2 + 0.54^2]^{1/2}$$

$$\underline{TLU_{mTWR} = \pm 0.86 \text{ MW}}$$

Loop Normal Accuracy

$$TLU_{TWR} = \pm[5 \times (e_{TE}^2 + e_{RT41}^2) + 4 \times (e_{FE}^2 + e_{T}^2 + e_{PAI3}^2) + e_{GAIO4}^2 + e_{TWR}^2]^{1/2}$$

$$TLU_{TWR} = \pm[5 \times (0.73^2 + 0.05^2) + 4 \times (1.29^2 + 0.24^2 + 0.01^2) + 0.53^2 + 0.54^2]^{1/2}$$

$$\underline{TLU_{TWR} = \pm 3.18 \text{ MW}}$$

Loop Acceptance Band

$$TLUAb_{TWR} = \pm[5 \times (Ab_{TE}^2 + Ab_{RT41}^2) + Ab_{FE}^2 + Ab_{T}^2 + Ab_{PAI3}^2 + Ab_{GAIO4}^2 + Ab_{TWR}^2]^{1/2}$$

$$TLUAb_{TWR} = \pm[5 \times (0.0^2 + 0.03^2) + 4 \times (0.0^2 + 0.08^2 + 0.005^2) + 0.35^2 + 0.4^2]^{1/2}$$

$$\underline{TLUAb_{TWR} = \pm 0.56 \text{ MW}}$$

6.0 Computations and Analyses:

6.2 Loop Accuracies:

Total Water Power RDAS Loop Accuracy

Loop Normal Measurable Accuracy

$$TLU_{mRDASTW} = \pm[5 \times (e_{mTE}^2 + e_{mRT41}^2) + 4 \times (e_{mFE}^2 + e_{mT}^2 + e_{mPAI3}^2) + e_{mGAIO4}^2 + e_{mRDASTW}^2]^{1/2}$$

$$TLU_{mRDASTW} = \pm[5 \times (0.0^2 + 0.05^2) + 4 \times (0.0^2 + 0.2^2 + 0.01^2) + 0.53^2 + 0.71^2]^{1/2}$$

$$\underline{TLU_{mRDASTW} = \pm 0.98 \text{ MW}}$$

Loop Normal Accuracy

$$TLU_{RDASTW} = \pm[5 \times (e_{TE}^2 + e_{RT41}^2) + 4 \times (e_{FE}^2 + e_{T}^2 + e_{PAI3}^2) + e_{GAIO4}^2 + e_{RDASTW}^2]^{1/2}$$

$$TLU_{RDASTW} = \pm[5 \times (0.73^2 + 0.05^2) + 4 \times (1.29^2 + 0.24^2 + 0.01^2) + 0.53^2 + 0.71^2]^{1/2}$$

$$\underline{TLU_{RDASTW} = \pm 3.22 \text{ MW}}$$

Loop Acceptance Band

$$TLUAb_{RDASTW} = \pm[5 \times (Ab_{TE}^2 + Ab_{RT41}^2) + 4 \times (Ab_{FE}^2 + Ab_{T}^2 + Ab_{PAI3}^2) + Ab_{GAIO4}^2 + Ab_{RDASTW}^2]^{1/2}$$

$$TLUAb_{RDASTW} = \pm[5 \times (0.0^2 + 0.03^2) + 4 \times (0.0^2 + 0.08^2 + 0.005^2) + 0.35^2 + 0.5^2]^{1/2}$$

$$\underline{TLUAb_{RDASTW} = \pm 0.63 \text{ MW}}$$

7.0 Summary of Results:

Loop ID FRS-1-1 (2,3,4,A,B,C,D)

Setpoint And Scaling Document

Loop Number			
FRS-1-1		Safety-Related?	Yes ☒ No ☐
Loop Function			

The function of loop FRS-1-1 (2,3,4,A,B,C,D) is to provide quadrant core flow information to the operators and the water power calculators that are monitored to assure that the operation is within the limits established by the safety analysis.

Loop Accuracy		LCS	Acceptable As Found	Acceptable As Left
	Function			
	Quadrant flow	N/A	≤ ± 50 gpm	≤ ± 27 gpm

Loop Components		Process	Calibration Value		Acceptable	Acceptable
No.	Tag No.	Range/Setpoint	Input	Output	As Found	As Left
1	FE-1-1 (2,3,4)	0 – 570 "wc	0 – 16,000 gpm	0 – 570"wc	N/A	N/A
2	FT-1-1 (2,3,4)	0 – 570 "wc	0 – 570 "wc	0 – 1 Vdc	± 0.003 Vdc	± 0.001 Vdc
3	WPC-1 (2) (PAI3)	0 – 1 Vdc	0 – 1 Vdc	N/A (digital)	± 0.0001 Vdc	± 0.00004 Vdc
4	WPC-1 (2) (GIO4)	0 – 20 mA	N/A (digital)	0 – 20 mA	± 0.03 mA	± 0.02 mA
5	FRS-1-1 (2,3,4,A,B,C, D)	0 – 20 mA	0 – 20 mA	0 – 16,000 gpm	±23 gpm	±16 gpm
6	RDAS	0 – 20 mA	0 – 20 mA	0 – 16,000 gpm	±32 gpm	±23 gpm

Component Description			
No.	Manufacturer / Model Number	Panel/Rack	Location
1	Orifice Plate	Local	D4/D4/D6/D6, El. 51' 3"
2	Foxboro/823DP	Local	C5/C5/C5/C5, El.42'
3	Azonix / Model PAI3	WPC Cabinet	E1, El. 79'
4	Azonix / Model GIO4	WPC Cabinet	E1, El. 79'
5	Molytec / Model 2702	R1	D2, El 98'
6	Neff Instrument / Model 470050	RDAS	C1, El 98'

Additional Calibration Requirements:

Calibration Frequency Requirements: 12 Months

Calibration Equipment Accuracy Requirements:
FE: ICT = OCT = OCR = ICR = N/A
FT: ICT = ± 0.4"wc; OCT= ICR = OCR = N/A
PAI3: ICT = OCT = ICR = OCR = N/A
GIO4: OCT= ± 0.011 mA; ICT = ICR = OCR = N/A
FRS: ICT = OCT = ICR = OCR = N/A
RDAS: ICT = OCT = ICR = OCR = N/A

Static Head Value; N/A

Technical Specifications Sections Applicable: 3.3.1.1

References: Note 1

No.		No.	

7.0 Summary of Results:

Loop ID FRS-1-1 (2,3,4,A,B,C,D)
TRANSFER FUNCTIONS
Component No. 1 INPUT = 0 – 16000 GPM FLOW OUTPUT = 0 – 570 "WC
Component No. 2 $\text{OUTPUT (mA)} = \frac{\text{INPUT ("wc)}}{\text{570 "wc}} \bullet \text{16 mA} + \text{4 mA}$
Component No. 3 OUTPUT(direct reading Vdc) = INPUT(Vdc)
Component No. 4 OUTPUT (mA) = INPUT (direct reading mA))
Component No. 5 $\text{OUTPUT(direct reading gpm)} = \frac{\text{INPUT(mA)}}{\text{20 mA}} \times \text{16000 gpm}$
Component No. 6 $\text{OUTPUT(direct reading gpm)} = \frac{\text{INPUT(mA)}}{\text{20 mA}} \times \text{16000 gpm}$

7.0 Summary of Results:

COMMENTS AND NOTES

Loop ID FRS-1-1 (2,3,4,A,B,C,D)

Comments and Notes

1. As found and as left values are applicable to individual component calibrations. Values for string calibrations can be determined by algebraically combining the individual component values for each component in the string using the SRSS method.

7.0 Summary of Results:

Loop ID FRS-1-5A (5)

Setpoint And Scaling Document

Loop Number			
FRS-1-5A		Safety-Related?	Yes ☒ No ☐
Loop Function			

The function of loop FRS-1-5A (5) is to provide total core flow information to the operators and the water power calculators that are monitored to assure that the operation is within the limits established by the safety analysis.

Loop Accuracy		LCS	Acceptable	Acceptable
	Function		As Found	As Left
	Total flow	N/A	≤ ± 173 gpm	≤ ± 105 gpm

Loop Components		Process	Calibration Value		Acceptable	Acceptable
No.	Tag No.	Range/Setpoint	Input	Output	As Found	As Left
1	FE-1-1 (2,3,4)	0 – 570 "wc	0 – 16,000 gpm	0 – 570"wc	N/A	N/A
2	FT-1-1 (2,3,4)	0 – 570 "wc	0 – 570 "wc	0 – 1 Vdc	± 0.003 Vdc	± 0.001 Vdc
3	WPC-1 (2) (PAI3)	0 – 1 Vdc	0 – 1 Vdc	N/A (digital)	± 0.0001 Vdc	± 0.00004 Vdc
4	WPC-1 (2) (GIO4)	0 – 20 mA	N/A (digital)	0 – 20 mA	± 0.03 mA	± 0.02 mA
5	FRS-1-5A (5)	0 – 20 mA	0 – 20 mA	0 – 64,000 gpm	±155 gpm	±100 gpm
6	RDAS	0 – 20 mA	0 – 20 mA	0 – 64,000 gpm	±127 gpm	±90 gpm

Component Description

No.	Manufacturer / Model Number	Panel/Rack	Location
1	Orifice Plate	Local	D4/D4/D6/D6, El. 51' 3"
2	Foxboro/823DP	Local	C5/C5/C5/C5, El.42'
3	Azonix / Model PAI3	WPC Cabinet	E1, El. 79'
4	Azonix / Model GIO4	WPC Cabinet	E1, El. 79'
5	Molytec / Model 2702	R1	D2, El 98'
6	Neff Instrument / Model 470050	RDAS	C1, El 98'

Additional Calibration Requirements:

Calibration Frequency Requirements: 12 Months

Calibration Equipment Accuracy Requirements:
FE: ICT = OCT = OCR = ICR = N/A
FT: ICT = ± 0.4"wc; OCT= ICR = OCR = N/A
PAI3: ICT = OCT = ICR = OCR = N/A
GIO4: OCT= ± 0.011 mA; ICT = ICR = OCR = N/A
FRS: ICT = OCT = ICR = OCR = N/A
RDAS: ICT = OCT = ICR = OCR = N/A

Static Head Value; N/A

Technical Specifications Sections Applicable: 3.3.1.1

References: Note 1 & 2

No.		No.	

7.0 Summary of Results:

Loop ID FRS-1-1 (2,3,4,A,B,C,D)

TRANSFER FUNCTIONS

Component No. 1

INPUT = 0 – 16000 GPM FLOW

OUTPUT = 0 – 570 "WC

Component No. 2

$$\text{OUTPUT (mA)} = \frac{\text{INPUT ("wc)}}{\text{570 "wc}} \bullet \text{16 mA} + \text{4 mA}$$

Component No. 3

$$\text{OUTPUT(direct reading Vdc)} = \underline{\text{INPUT(Vdc)}}$$

Component No. 4

OUTPUT (mA) = INPUT (direct reading mA))

Component No. 5

$$\text{OUTPUT(direct reading gpm)} = \frac{\text{INPUT(mA)}}{\text{20 mA}} \times \text{64000 gpm}$$

Component No. 6

$$\text{OUTPUT(direct reading gpm)} = \frac{\text{INPUT(mA)}}{\text{20 mA}} \times \text{64000 gpm}$$

7.0 Summary of Results:

COMMENTS AND NOTES

Loop ID FRS-1-1 (2,3,4,A,B,C,D)

Comments and Notes

1. As found and as left values are applicable to individual component calibrations. Values for string calibrations can be determined by algebraically combining the individual component values for each component in the string using the SRSS method.

2. The water power calculator(s) sums the outputs of each quadrant flow transmitter to output the total flow.

7.0 Summary of Results:

Loop ID TRS-1-18 (20)

Setpoint And Scaling Document

Loop Number			
TRS-1-18		Safety-Related?	Yes ☒ No ☐
Loop Function			

The function of loop TRS-1-18 (20) is to provide core inlet temperature information to the operators and the water power calculators that are monitored to assure that the operation is within the limits established by the safety analysis.

Loop Accuracy		LCS	Acceptable As Found	Acceptable As Left
Function				
Inlet Temperature		N/A	≤ ± 0.26ºF	≤ ± 0.15ºF

Loop Components		Process	Calibration Value		Acceptable	Acceptable
No.	Tag No.	Range/Setpoint	Input	Output	As Found	As Left
1	TE-1-1B (2B,3B,4B)	100 – 200 ºF	100 – 200 ºF	114.87–136.44 Ω	N/A	N/A
2	WPC-1 (2) (RT41)	100 – 300Ω	100 – 300Ω	N/A (digital)	± 0.006 Ω	± 0.004 Ω
3	WPC-1 (2) (GIO4)	0 – 20 mA	N/A (digital)	0 – 20 mA	± 0.03 mA	± 0.02 mA
4	TRS-1-18 (20)	0 – 20 mA	0 – 20 mA	100 – 200ºF	±0.2ºF	±0.1ºF
5	RDAS	0 – 20 mA	0 – 20 mA	100 – 200ºF	±0.26ºF	±0.2ºF
6						

Component Description			
No.	Manufacturer / Model Number	Panel/Rack	Location
1	100Ω platinum RTD	Local	D5/D5/E5/E5, El. 60'
2	Azonix / Model RT41	WPC Cabinet	E1, El. 79'
3	Azonix / Model GIO4	WPC Cabinet	E1, El. 79'
4	Molytec / Model 2702	R1	D2, El 98'
5	Neff Instrument / Model 470050	RDAS	C1, El 98'
6			

Additional Calibration Requirements:

Calibration Frequency Requirements: 12 Months

Calibration Equipment Accuracy Requirements:
TE: ICT = OCT = OCR = ICR = N/A
RT41: ICT_{low} = 0.0005Ω; ICT_{high} = 0.0015Ω; OCT = ICR = OCR = N/A
GIO4: OCT= ± 0.011 mA; ICT = ICR = OCR = N/A
TRS: ICT = OCT = ICR = OCR = N/A
RDAS: ICT = OCT = ICR = OCR = N/A

Static Head Value; N/A

Technical Specifications Sections Applicable: 3.3.1.1

References: Note 1 & 2

No.		No.	

7.0 Summary of Results:

Loop ID TRS-1-18 (20)
TRANSFER FUNCTIONS
Component No. 1 °F = Ω per Appendix P Table
Component No. 2 OUTPUT(direct reading Ω) = INPUT(Ω)
Component No. 3 OUTPUT (mA) = INPUT (direct reading mA)
Component No. 4 OUTPUT(direct reading °F) = $\frac{\text{INPUT(mA)} \times 100\,°\text{F}}{20\text{ mA}} + 100\,°\text{F}$
Component No. 5 OUTPUT(direct reading °F) = $\frac{\text{INPUT(mA)} \times 100\,°\text{F}}{20\text{ mA}} + 100\,°\text{F}$
Component No. _____

7.0 Summary of Results:

COMMENTS AND NOTES

Loop ID TRS-1-18 (20)

Comments and Notes

1. As found and as left values are applicable to individual component calibrations. Values for string calibrations can be determined by algebraically combining the individual component values for each component in the string using the SRSS method.

2. The water power calculator(s) averages the outputs of each inlet TE to provide inlet temperature.

7.0 Summary of Results:

Loop ID TRS-1-17 (27)					
Setpoint And Scaling Document					
Loop Number					
TRS-1-17		Safety-Related? Yes ☒ No ☐			
Loop Function					
The function of loop TRS-1-17 (27) is to provide core outlet temperature information to the operators and the water power calculators that are monitored to assure that the operation is within the limits established by the safety analysis.					
Loop Accuracy		LCS	Acceptable	Acceptable	
Function			As Found	As Left	
Outlet Temperature		N/A	≤ ± 0.25ºF	≤ ± 0.14ºF	

Loop Components		Process	Calibration Value		Acceptable	Acceptable
No.	Tag No.	Range/Setpoint	Input	Output	As Found	As Left
1	TE-1-5A	100 – 200 ºF	100 – 200 ºF	114.87–136.44 Ω	N/A	N/A
2	WPC-1 (2) (RT41)	100 – 300Ω	100 – 300Ω	N/A (digital)	± 0.006 Ω	± 0.004 Ω
3	WPC-1 (2) (GIO4)	0 – 20 mA	N/A (digital)	0 – 20 mA	± 0.03 mA	± 0.02 mA
4	TRS-1-17 (27)	0 – 20 mA	0 – 20 mA	100 – 200ºF	±0.2ºF	±0.1ºF
5	RDAS	0 – 20 mA	0 – 20 mA	100 – 200ºF	±0.26ºF	±0.2ºF
6						

Component Description			
No.	Manufacturer / Model Number	Panel/Rack	Location
1	100Ω platinum RTD	Local	J6, El.79'
2	Azonix / Model RT41	WPC Cabinet	E1, El. 79'
3	Azonix / Model GIO4	WPC Cabinet	E1, El. 79'
4	Molytec / Model 2702	R1	D2, El 98'
5	Neff Instrument / Model 470050	RDAS	C1, El 98'
6			

Additional Calibration Requirements:

Calibration Frequency Requirements: 12 Months

Calibration Equipment Accuracy Requirements:
TE: ICT = OCT = OCR = ICR = N/A
RT41: ICT_{low} = 0.0005Ω; ICT_{high} = 0.0015Ω; OCT = ICR = OCR = N/A
GIO4: OCT= ± 0.011 mA; ICT = ICR = OCR = N/A
TRS: ICT = OCT = ICR = OCR = N/A
RDAS: ICT = OCT = ICR = OCR = N/A

Static Head Value; N/A

Technical Specifications Sections Applicable: 3.3.1.1

References: Note 1

No.		No.	

7.0 Summary of Results:

Loop ID TRS-1-17 (27)
TRANSFER FUNCTIONS
Component No. 1 °F = Ω per Appendix P Table
Component No. 2 OUTPUT(direct reading Ω) = INPUT(Ω)
Component No. 3 OUTPUT (mA) = INPUT (direct reading mA)
Component No. 4 $\text{OUTPUT(direct reading °F)} = \frac{\text{INPUT(mA)} \times 100\,°\text{F}}{20\text{ mA}} + 100\,°\text{F}$
Component No. 5 $\text{OUTPUT(direct reading °F)} = \frac{\text{INPUT(mA)} \times 100\,°\text{F}}{20\text{ mA}} + 100\,°\text{F}$
Component No.

7.0 Summary of Results:

COMMENTS AND NOTES

Loop ID TRS-1-17 (27)
Comments and Notes
1. As found and as left values are applicable to individual component calibrations. Values for string calibrations can be determined by algebraically combining the individual component values for each component in the string using the SRSS method.

7.0 Summary of Results:

Loop ID TRS-1-11 (12,13,14,21,22,23,24)

Setpoint And Scaling Document

Loop Number

TRS-1-11 Safety-Related? Yes ☒ No ☐

Loop Function

The function of loop TRS-1-11 (12,13,14,21,22,23,24) is to provide core quadrant outlet temperature information to the operators and the water power calculators that are monitored to assure that the operation is within the limits established by the safety analysis.

Loop Accuracy	LCS	Acceptable As Found	Acceptable As Left
Function			
Quadrant Outlet Temperature	N/A	≤ ± 0.43ºF	≤ ± 0.28ºF

Loop Components		Process	Calibration Value		Acceptable	Acceptable
No	Tag No.	Range/Setpoint	Input	Output	As Found	As Left
1	TE-1-1A (2A,3A,4A,)	0 – 200 ºF	0 – 200 ºF	92.94–136.44 Ω	N/A	N/A
2	WPC-1 (2) (RT41)	100 – 300Ω	100 – 300Ω	N/A (digital)	± 0.006 Ω	± 0.004 Ω
3	WPC-1 (2) (GIO4)	0 – 20 mA	N/A (digital)	0 – 20 mA	± 0.03 mA	± 0.02 mA
4	TRS-1-11 (12,13,14,21,22,23,24)	0 – 20 mA	0 – 20 mA	0 – 200ºF	±0.3ºF	±0.2ºF
5	RDAS	0 – 20 mA	0 – 20 mA	0 – 200ºF	±0.42ºF	±0.3ºF
6						

Component Description			
No.	Manufacturer / Model Number	Panel/Rack	Location
1	100Ω platinum RTD	Local	D5,D5,D5,D5, El. 60'
2	Azonix / Model RT41	WPC Cabinet	E1, El. 79'
3	Azonix / Model GIO4	WPC Cabinet	E1, El. 79'
4	Molytec / Model 2702	R1	D2, El 98'
5	Neff Instrument / Model 470050	RDAS	C1, El 98'
6			

Additional Calibration Requirements:

Calibration Frequency Requirements: 12 Months

Calibration Equipment Accuracy Requirements:
TE: ICT = OCT = OCR = ICR = N/A
RT41: ICT_{low} = 0.0005Ω; ICT_{high} = 0.0015Ω; OCT = ICR = OCR = N/A
GIO4: OCT= ± 0.011 mA; ICT = ICR = OCR = N/A
TRS: ICT = OCT = ICR = OCR = N/A
RDAS: ICT = OCT = ICR = OCR = N/A

Static Head Value; N/A

Technical Specifications Sections Applicable: 3.3.1.1

References: Note 1

No.		No.	

7.0 Summary of Results:

Loop ID TRS-1-11 (12,13,14,21,22,23,24)
TRANSFER FUNCTIONS
Component No. 1 °F = Ω per Appendix P Table
Component No. 2 OUTPUT(direct reading Ω) = INPUT(Ω)
Component No. 3 OUTPUT (mA) = INPUT (direct reading mA)
Component No. 4 OUTPUT(direct reading °F) = $\frac{\text{INPUT(mA)} \times 200\,°\text{F}}{20\text{ mA}}$
Component No. 5 OUTPUT(direct reading °F) = $\frac{\text{INPUT(mA)} \times 200\,°\text{F}}{20\text{ mA}}$
Component No.

7.0 Summary of Results:

COMMENTS AND NOTES

Loop ID TRS-1-11 (12,13,14,21,22,23,24)

Comments and Notes

1. As found and as left values are applicable to individual component calibrations. Values for string calibrations can be determined by algebraically combining the individual component values for each component in the string using the SRSS method.

7.0 Summary of Results:

Loop ID DTRS-1-1 (2,3,4,5,A,B,C,D,E)

Setpoint And Scaling Document

Loop Number			
DTRS-1-1		Safety-Related?	Yes ☒ No ☐
Loop Function			

The function of loop DTRS-1-1 (2,3,4,5,A,B,C,D,E) is to provide core quadrant and total differential temperature information to the operators and the water power calculators that are monitored to assure that the operation is within the limits established by the safety analysis.

Loop Accuracy		LCS	Acceptable	Acceptable
	Function		As Found	As Left
	Quadrant and Total Differential Temperature	N/A	≤ ± 0.19ºF	≤ ± 0.12ºF

Loop Components		Process	Calibration Value		Acceptable	Acceptable
No.	Tag No.	Range/Setpoint	Input	Output	As Found	As Left
1	TE-1-1B (2B,3B,4B)	100 – 200 ºF	100 – 200 ºF	114.87–136.44 Ω	N/A	N/A
2	TE-1-1A (2A,3A,4A,5A)	0 – 200 ºF	0 – 200 ºF	92.94–136.44 Ω	N/A	N/A
3	WPC-1 (2) (RT41)	100 – 300Ω	100 – 300Ω	N/A (digital)	± 0.006 Ω	± 0.004 Ω
4	WPC-1 (2) (GIO4)	0 – 20 mA	N/A (digital)	0 – 20 mA	± 0.03 mA	± 0.02 mA
5	DTRS-1-1 (2,3,4,5,A,B,C, D,E)	0 – 20 mA	0 – 20 mA	0 – 60ºF	±0.15ºF	±0.1ºF
6	RDAS	0 – 20 mA	0 – 20 mA	0 – 60ºF	±0.16ºF	±0.1ºF

Component Description

No.	Manufacturer / Model Number	Panel/Rack	Location
1	100Ω platinum RTD	Local	D5/D5/E5/E5, El. 60'
2	100Ω platinum RTD	Local	D5,D5,D5,D5, El. 60' (5A)J6, El.79'
3	Azonix / Model RT41	WPC Cabinet	E1, El. 79'
4	Azonix / Model GIO4	WPC Cabinet	E1, El. 79'
5	Molytec / Model 2702	R1	D2, El 98'
6	Neff Instrument / Model 470050	RDAS	C1, El 98'

Additional Calibration Requirements:

Calibration Frequency Requirements: 12 Months

Calibration Equipment Accuracy Requirements:
TE: ICT = OCT = OCR = ICR = N/A
RT41: ICT_{low} = 0.0005Ω; ICT_{high} = 0.0015Ω; OCT = ICR = OCR = N/A
GIO4: OCT= ± 0.011 mA; ICT = ICR = OCR = N/A
TRS: ICT = OCT = ICR = OCR = N/A
RDAS: ICT = OCT = ICR = OCR = N/A

Static Head Value; N/A

Technical Specifications Sections Applicable: 3.3.1.1

References: Note 1 , 2 & 3

No.		No.	

7.0 Summary of Results:

Loop ID DTRS-1-1 (2,3,4,5,A,B,C,D,E)

TRANSFER FUNCTIONS

Component No. 1

°F = Ω per Appendix P Table

Component No. 2

°F = Ω per Appendix P Table

Component No. 3

OUTPUT(direct reading Ω) = INPUT(Ω)

Component No. 4

OUTPUT (mA) = INPUT (direct reading mA)

Component No. 5

$$\text{OUTPUT(direct reading °F)} = \frac{\text{INPUT(mA)} \times 60\,°\text{F}}{20\text{ mA}}$$

Component No. 6

$$\text{OUTPUT(direct reading °F)} = \frac{\text{INPUT(mA)} \times 60\,°\text{F}}{20\text{ mA}}$$

7.0 Summary of Results:

COMMENTS AND NOTES

Loop ID DTRS-1-1 (2,3,4,5,A,B,C,D,E)

Comments and Notes

1. As found and as left values are applicable to individual component calibrations. Values for string calibrations can be determined by algebraically combining the individual component values for each component in the string using the SRSS method.

2. The water power calculator(s) averages the outputs of each inlet TE to provide inlet temperature.

3. The water power calculator(s) determines differential temperature by subtracting the average inlet temperature from each of the outlet temperatures.

7.0 Summary of Results:

Loop ID WRS-1-1 (2,3,4,,A,B,C,D,)

Setpoint And Scaling Document

Loop Number
WRS-1-1

Safety-Related? Yes ☒ No ☐

Loop Function

The function of loop WRS-1-1 (2,3,4,,A,B,C,D,) is to calculate quadrant power which is monitored to assure that the operation is within the limits established by the safety analysis.

Loop Accuracy	LCS	Acceptable As Found	Acceptable As Left
Function			
Quadrant Water Power	N/A	≤ ± 0.32MW	≤ ± 0.18MW

Loop Components		Process	Calibration Value		Acceptable	Acceptable
No.	Tag No.	Range/Setpoint	Input	Output	As Found	As Left
1	TE-1-1B (2B,3B,4B)	100 – 200 ºF	100 – 200 ºF	114.87–136.44 Ω	N/A	N/A
2	TE-1-1A (2A,3A,4A)	0 – 200 ºF	0 – 200 ºF	92.94–136.44 Ω	N/A	N/A
3	FE-1-1 (2,3,4)	0 – 570 "wc	0 – 16,000 gpm	0 – 570"wc	N/A	N/A
4	FT-1-1 (2,3,4)	0 – 570 "wc	0 – 570 "wc	0 – 1 Vdc	± 0.003 Vdc	± 0.001 Vdc
5	WPC-1 (2) (PAI3)	0 – 1 Vdc	0 – 1 Vdc	N/A (digital)	± 0.0001 Vdc	± 0.00004 Vdc
6	WPC-1 (2) (RT41)	100 – 300Ω	100 – 300Ω	N/A (digital)	± 0.006 Ω	± 0.004 Ω
7	WPC-1 (2) (GIO4)	0 – 20 mA	N/A (digital)	0 – 20 mA	± 0.03 mA	± 0.02 mA
8	WRS-1-1 (2,3,4,,A,B,C,D)	0 – 20 mA	0 – 20 mA	0 – 100MW	±0.17MW	±0.1MW
9	RDAS	0 – 20 mA	0 – 20 mA	0 – 100MW	±0.26MW	±0.2MW

Component Description			
No.	Manufacturer / Model Number	Panel/Rack	Location
1	100Ω platinum RTD	Local	D5/D5/E5/E5, El. 60'
2	100Ω platinum RTD	Local	D5,D5,D5,D5, El. 60'
3	Orifice Plate	Local	D4/D4/D6/D6, El. 51' 3"
4	Foxboro/823DP	Local	C5/C5/C5/C5, El.42'
5	Azonix / Model PAI3	WPC Cabinet	E1, El. 79'
6	Azonix / Model RT41	WPC Cabinet	E1, El. 79'
7	Azonix / Model GIO4	WPC Cabinet	E1, El. 79'
8	Molytec / Model 2702	R1	D2, El 98'
9	Neff Instrument / Model 470050	RDAS	C1, El 98'

Additional Calibration Requirements:

Calibration Frequency Requirements: 12 Months

7.0 Summary of Results:

Loop ID WRS-1-1 (2,3,4,,A,B,C,D,)			
Calibration Equipment Accuracy Requirements: TE: ICT = OCT = OCR = ICR = N/A FE: ICT = OCT = OCR = ICR = N/A FT: ICT = ± 0.4"wc; OCT= ICR = OCR = N/A PAI3: ICT = OCT = ICR = OCR = N/A RT41: ICT_{low} = 0.0005Ω; ICT_{high} = 0.0015Ω; OCT = ICR = OCR = N/A GIO4: OCT= ± 0.011 mA; ICT = ICR = OCR = N/A WRS: ICT = OCT = ICR = OCR = N/A RDAS: ICT = OCT = ICR = OCR = N/A			
Static Head Value; N/A			
Technical Specifications Sections Applicable:		3.3.1.1	
References: Note 1 , 2, 3 & 4			
No.		No.	

7.0 Summary of Results:

Loop ID WRS-1-1 (2,3,4,,A,B,C,D,)

TRANSFER FUNCTIONS

Component No. 1

°F = Ω per Appendix P Table

Component No. 2

°F = Ω per Appendix P Table

Component No. 3

INPUT = 0 – 16000 GPM FLOW
OUTPUT = 0 – 570 "WC

Component No. 4

$$\text{OUTPUT (mA)} = \frac{\text{INPUT ("wc)}}{\text{570 "wc}} \bullet \text{16 mA} + \text{4 mA}$$

Component No. 5

OUTPUT(direct reading Vdc) = INPUT(Vdc)

Component No. 6

OUTPUT(direct reading Ω) = INPUT(Ω)

Component No. 7

OUTPUT (mA) = INPUT (direct reading mA)

Component No. 8

$$\text{OUTPUT(direct reading °F)} = \frac{\text{INPUT(mA) x 100MW}}{\text{20 mA}}$$

Component No. 9

$$\text{OUTPUT(direct reading °F)} = \frac{\text{INPUT(mA) x 100MW}}{\text{20 mA}}$$

7.0 Summary of Results:

COMMENTS AND NOTES

Loop ID WRS-1-1 (2,3,4,,A,B,C,D,)

Comments and Notes

1. As found and as left values are applicable to individual component calibrations. Values for string calibrations can be determined by algebraically combining the individual component values for each component in the string using the SRSS method.

2. The water power calculator(s) averages the outputs of each inlet TE to determine inlet temperature.

3. The water power calculator(s) determines differential temperature by subtracting the average inlet temperature from the quadrant outlet temperature.

4. The water power calculator uses the quadrant differential temperature and quadrant flow to determine quadrant MW

7.0 Summary of Results:

Loop ID WRS-1-5A (5)

Setpoint And Scaling Document

Loop Number

WRS-1-1

Safety-Related? Yes ☒ No ☐

Loop Function

The function of loop WRS-1-1 (2,3,4,,A,B,C,D,) is to calculate total power which is monitored to assure that the operation is within the limits established by the safety analysis.

Loop Accuracy	LCS	Acceptable As Found	Acceptable As Left
Function			
Total Water Power	N/A	≤ ± 0.86MW	≤ ± 0.56MW

Loop Components		Process	Calibration Value		Acceptable	Acceptable
No.	Tag No.	Range/Setpoint	Input	Output	As Found	As Left
1	TE-1-1B (2B,3B,4B)	100 – 200 ºF	100 – 200 ºF	114.87–136.44 Ω	N/A	N/A
2	TE-1-5A	0 – 200 ºF	0 – 200 ºF	92.94–136.44 Ω	N/A	N/A
3	FE-1-1 (2,3,4)	0 – 570 "wc	0 – 16,000 gpm	0 – 570"wc	N/A	N/A
4	FT-1-1 (2,3,4)	0 – 570 "wc	0 – 570 "wc	0 – 1 Vdc	± 0.003 Vdc	± 0.001 Vdc
5	WPC-1 (2) (PAI3)	0 – 1 Vdc	0 – 1 Vdc	N/A (digital)	± 0.0001 Vdc	± 0.00004 Vdc
6	WPC-1 (2) (RT41)	100 – 300Ω	100 – 300Ω	N/A (digital)	± 0.006 Ω	± 0.004 Ω
7	WPC-1 (2) (GIO4)	0 – 20 mA	N/A (digital)	0 – 20 mA	± 0.03 mA	± 0.02 mA
8	WRS-1-5A (5)	0 – 20 mA	0 – 20 mA	0 – 350MW	±0.54MW	±0.4MW
9	RDAS	0 – 20 mA	0 – 20 mA	0 – 350MW	±0.71MW	±0.5MW

Component Description			
No.	Manufacturer / Model Number	Panel/Rack	Location
1	100Ω platinum RTD	Local	D5/D5/E5/E5, El. 60'
2	100Ω platinum RTD	Local	J6, El.79'
3	Orifice Plate	Local	D4/D4/D6/D6, El. 51' 3"
4	Foxboro/823DP	Local	C5/C5/C5/C5, El.42'
5	Azonix / Model PAI3	WPC Cabinet	E1, El. 79'
6	Azonix / Model RT41	WPC Cabinet	E1, El. 79'
7	Azonix / Model GIO4	WPC Cabinet	E1, El. 79'
8	Molytec / Model 2702	R1	D2, El 98'
9	Neff Instrument / Model 470050	RDAS	C1, El 98'

Additional Calibration Requirements:

Calibration Frequency Requirements: 12 Months

7.0 Summary of Results:

Loop ID WRS-1-5A (5)			
Calibration Equipment Accuracy Requirements: TE: ICT = OCT = OCR = ICR = N/A FE: ICT = OCT = OCR = ICR = N/A FT: ICT = ± 0.4"wc; OCT= ICR = OCR = N/A PAI3: ICT = OCT = ICR = OCR = N/A RT41: ICT_{low} = 0.0005Ω; ICT_{high} = 0.0015Ω; OCT = ICR = OCR = N/A GIO4: OCT= ± 0.011 mA; ICT = ICR = OCR = N/A WRS: ICT = OCT = ICR = OCR = N/A RDAS: ICT = OCT = ICR = OCR = N/A			
Static Head Value; N/A			
Technical Specifications Sections Applicable:		3.3.1.1	
References: Note 1 , 2, 3 & 4			
No.		No.	

7.0 Summary of Results:

Loop ID WRS-1-5A (5)

TRANSFER FUNCTIONS

Component No. 1

°F = Ω per Appendix P Table

Component No. 2

°F = Ω per Appendix P Table

Component No. 3

INPUT = 0 – 16000 GPM FLOW
OUTPUT = 0 – 570 "WC

Component No. 4

$$\text{OUTPUT (mA)} = \frac{\text{INPUT ("wc)}}{\text{570 "wc}} \bullet 16\text{ mA} + 4\text{ mA}$$

Component No. 5

OUTPUT(direct reading Vdc) = INPUT(Vdc)

Component No. 6

OUTPUT(direct reading Ω) = INPUT(Ω)

Component No. 7

OUTPUT (mA) = INPUT (direct reading mA)

Component No. 8

$$\text{OUTPUT(direct reading °F)} = \frac{\text{INPUT(mA) x 350MW}}{\text{20 mA}}$$

Component No. 9

$$\text{OUTPUT(direct reading °F)} = \frac{\text{INPUT(mA) x 350MW}}{\text{20 mA}}$$

7.0 Summary of Results:

COMMENTS AND NOTES

Loop ID WRS-1-5A (5)

Comments and Notes

1. As found and as left values are applicable to individual component calibrations. Values for string calibrations can be determined by algebraically combining the individual component values for each component in the string using the SRSS method.

2. The water power calculator(s) averages the outputs of each inlet TE to determine inlet temperature.

3. The water power calculator(s) determines differential temperature by subtracting the average inlet temperature from the core outlet temperature.

4. The water power calculator uses the core differential temperature and quadrant flow totals to determine total MW

7.0 Summary of Results:

Loop Diagrams

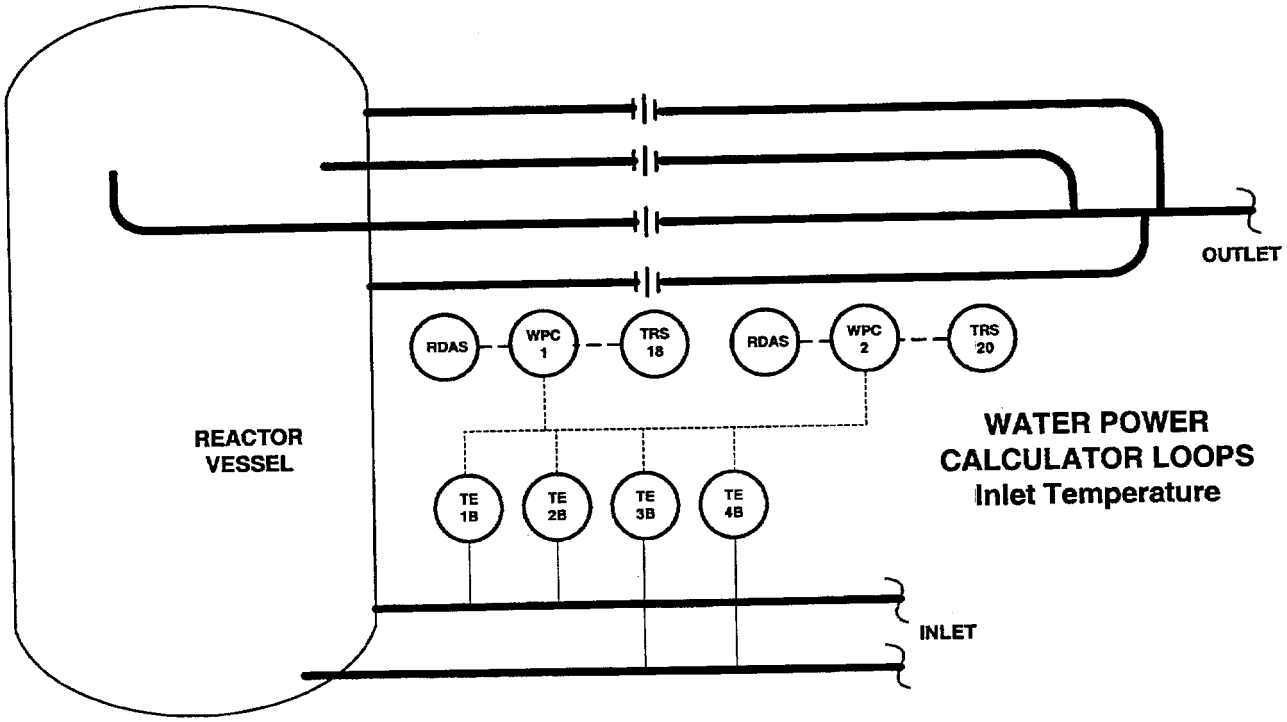

7.0 Summary of Results:

Loop Diagrams(cont.)

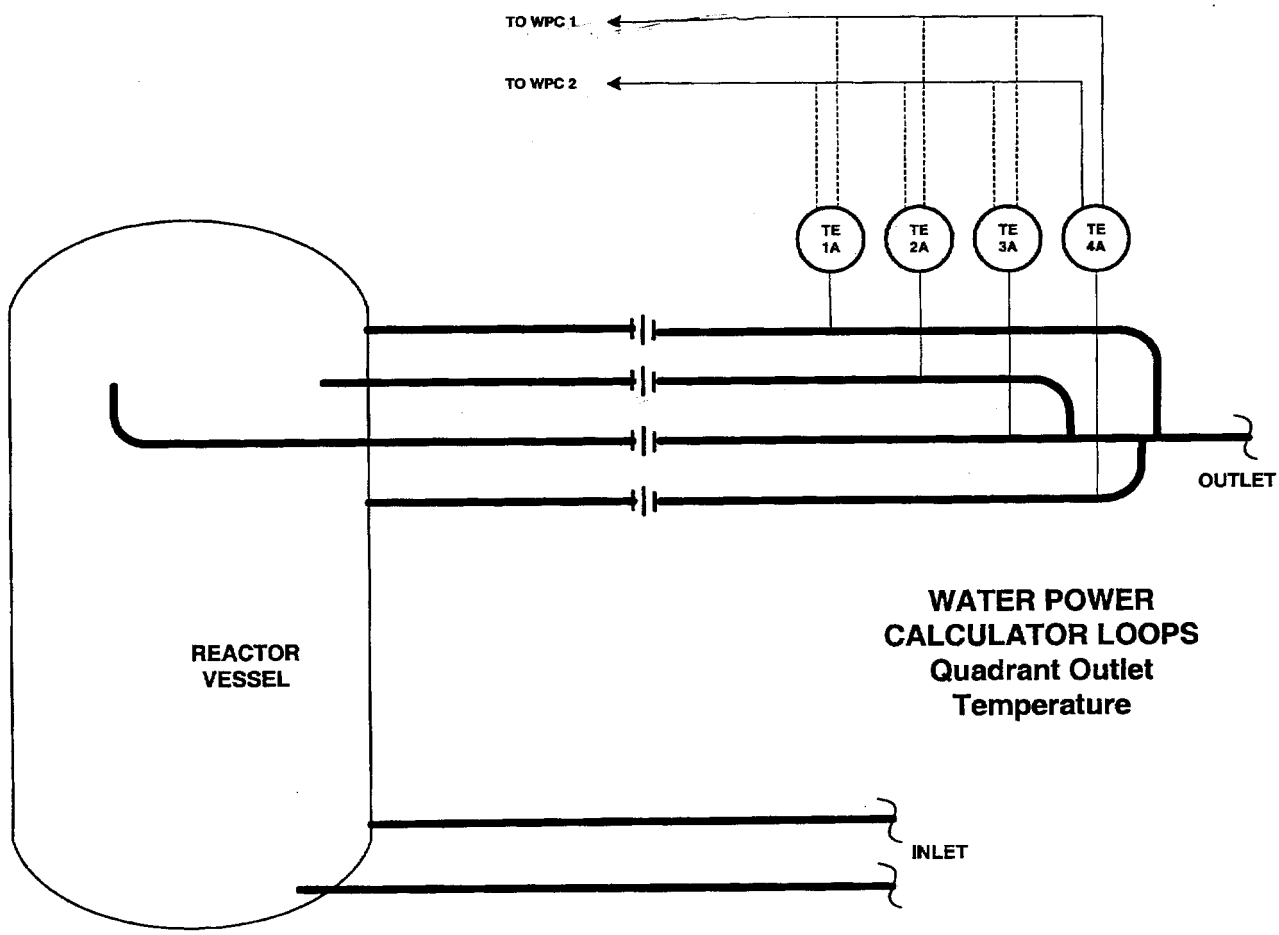

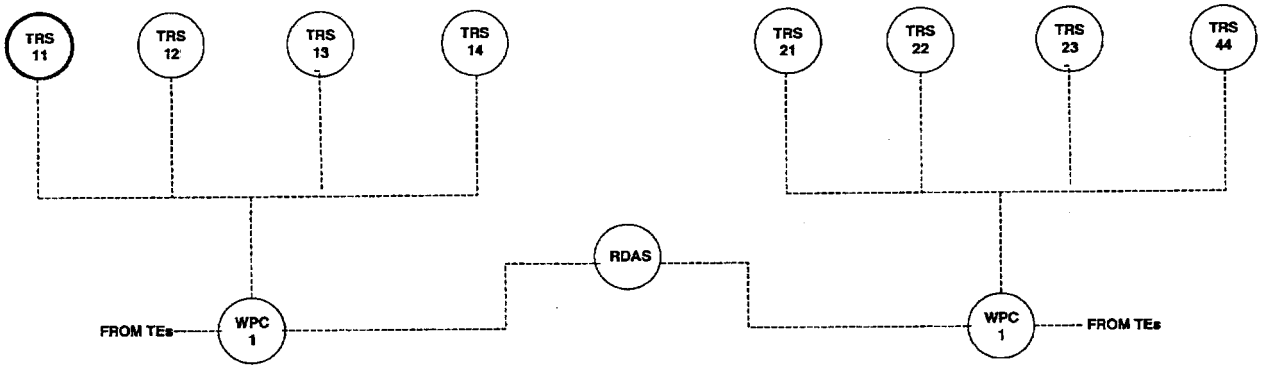

7.0 Summary of Results:

Loop Diagrams(cont.)

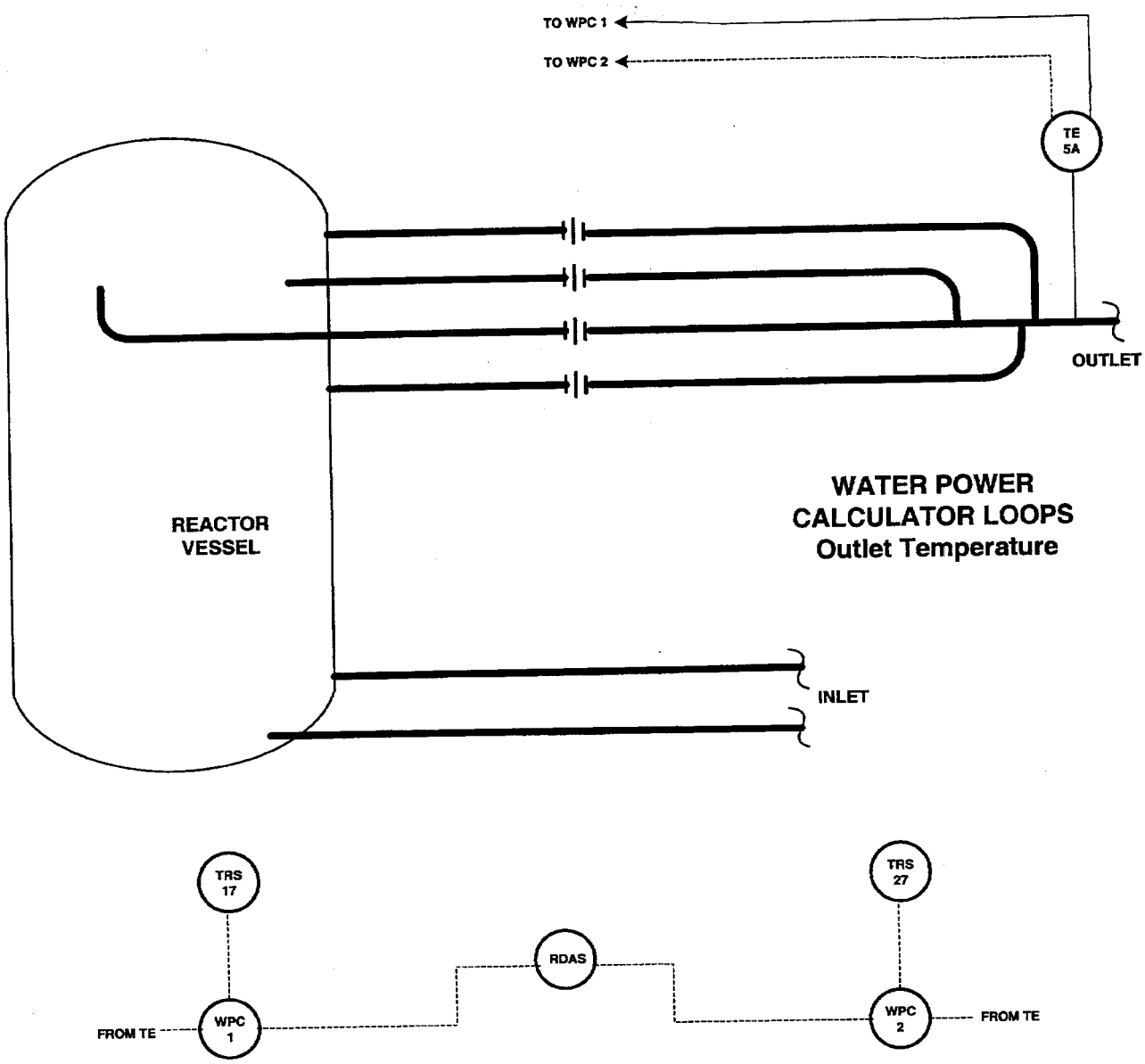

7.0 Summary of Results:

Loop Diagrams(cont.)

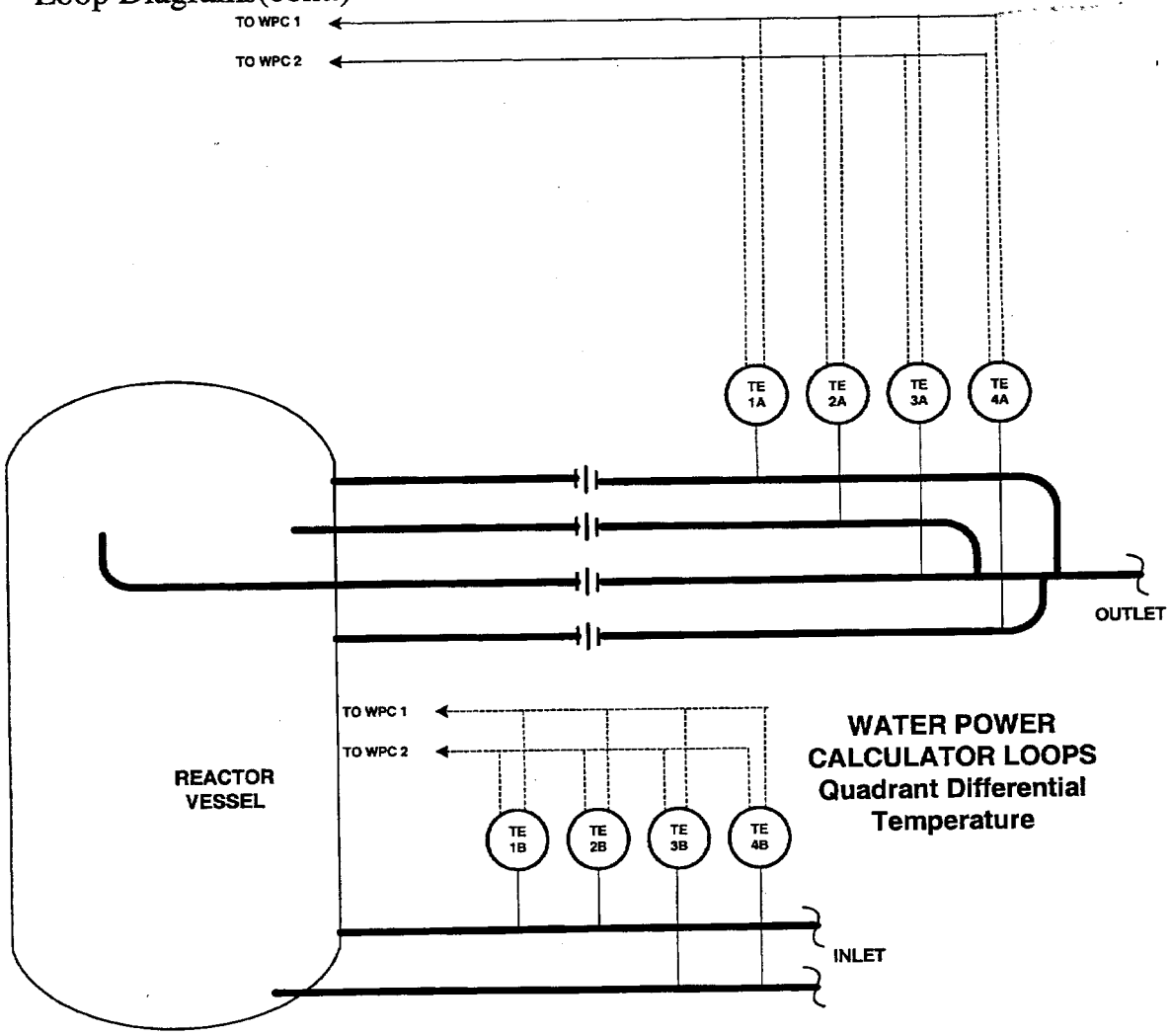

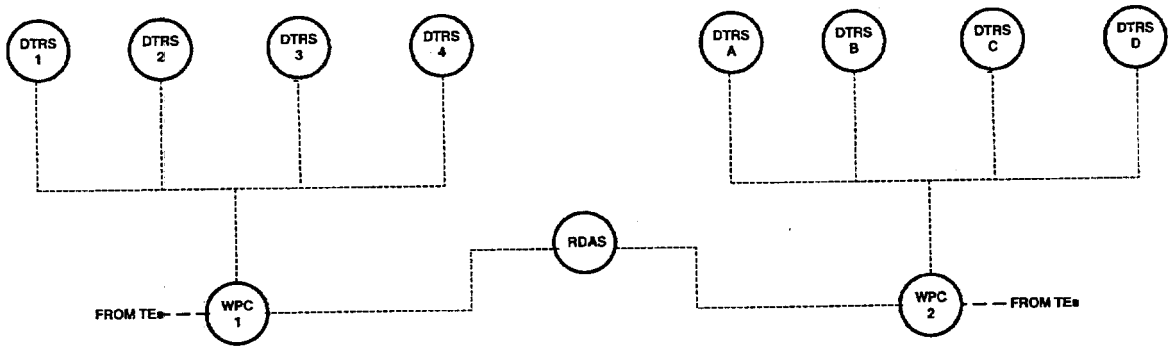

7.0 Summary of Results:

Loop Diagrams(cont.)

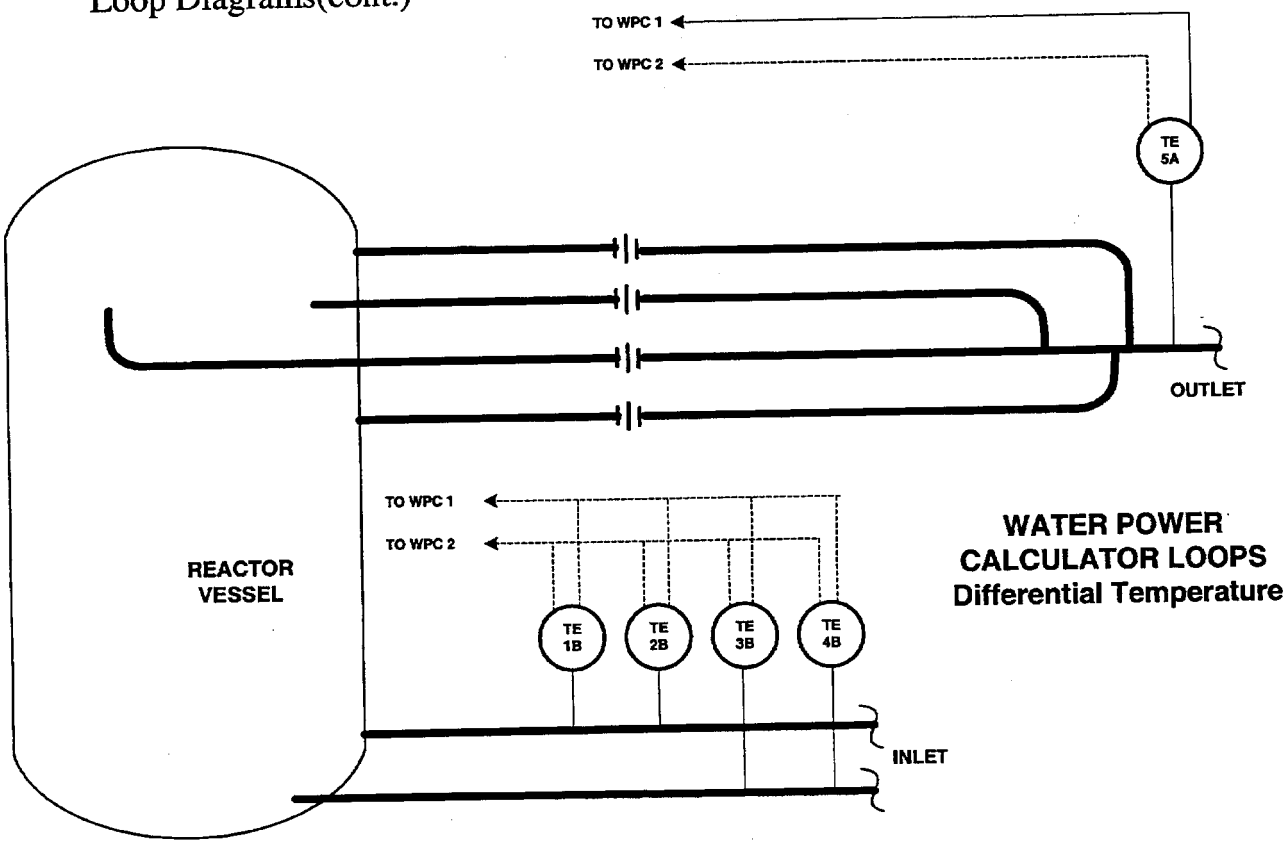

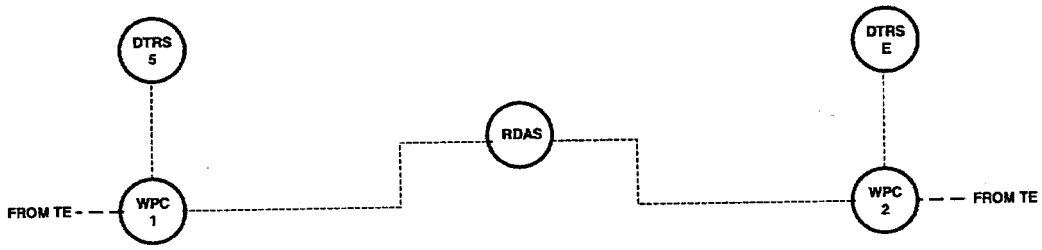

7.0 Summary of Results:

Loop Diagrams(cont.)

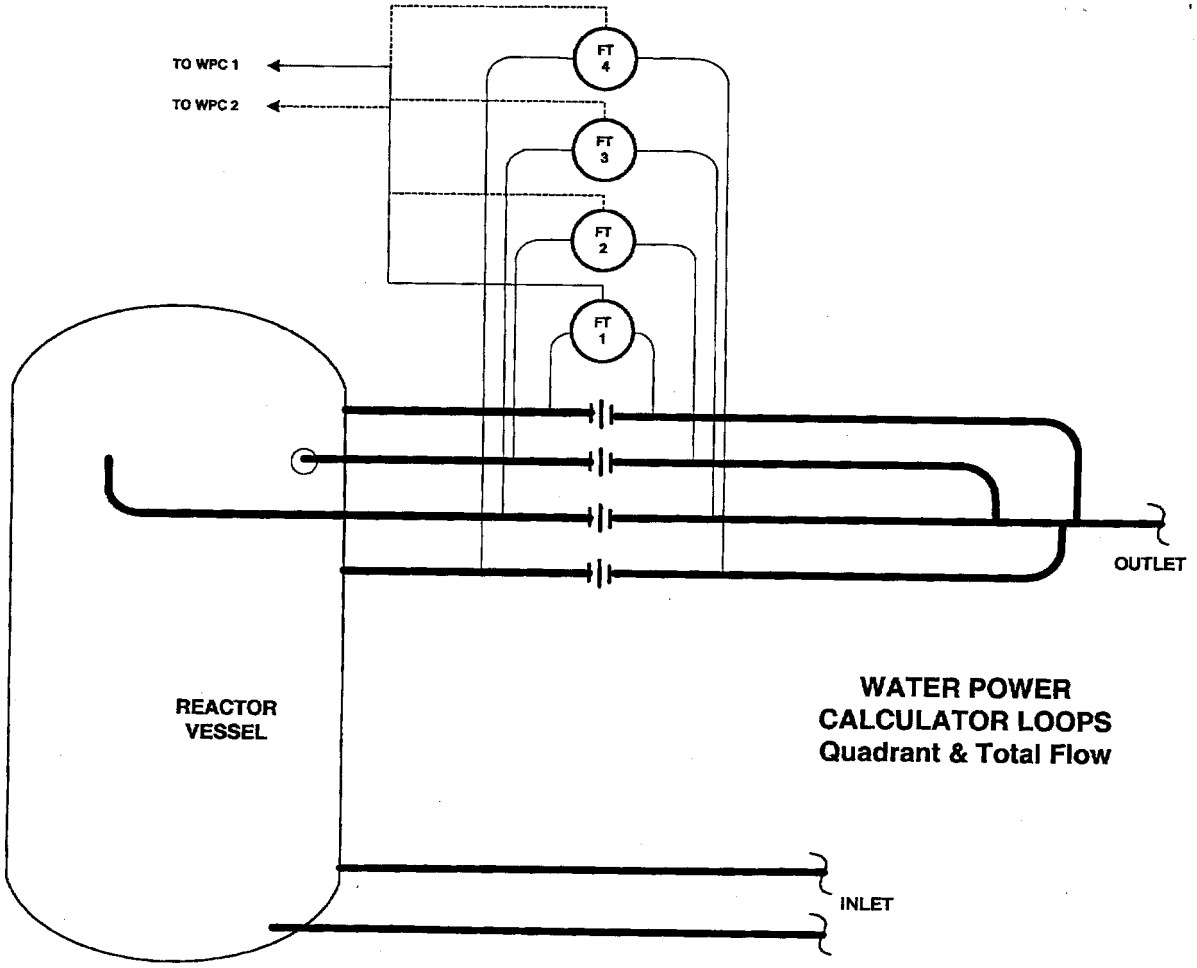

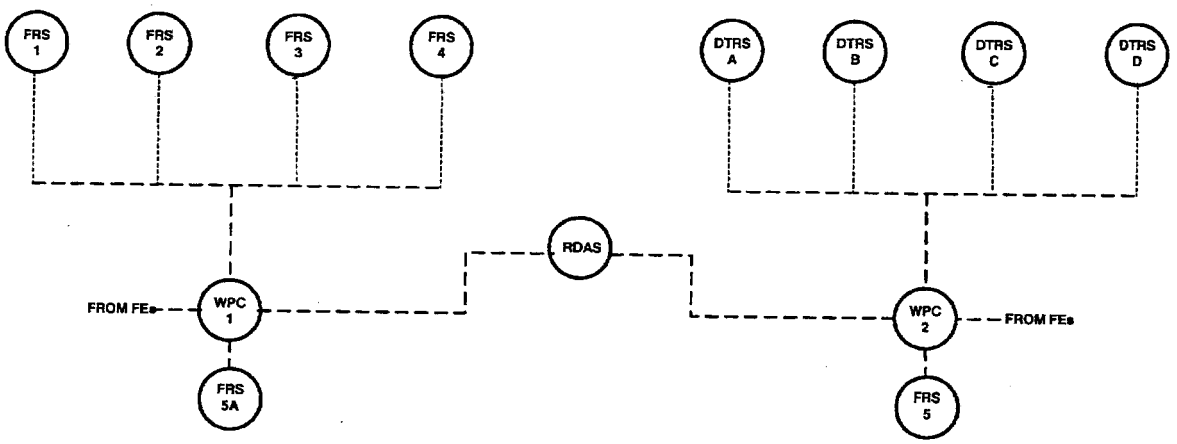

7.0 Summary of Results:

Loop Diagrams(cont.)

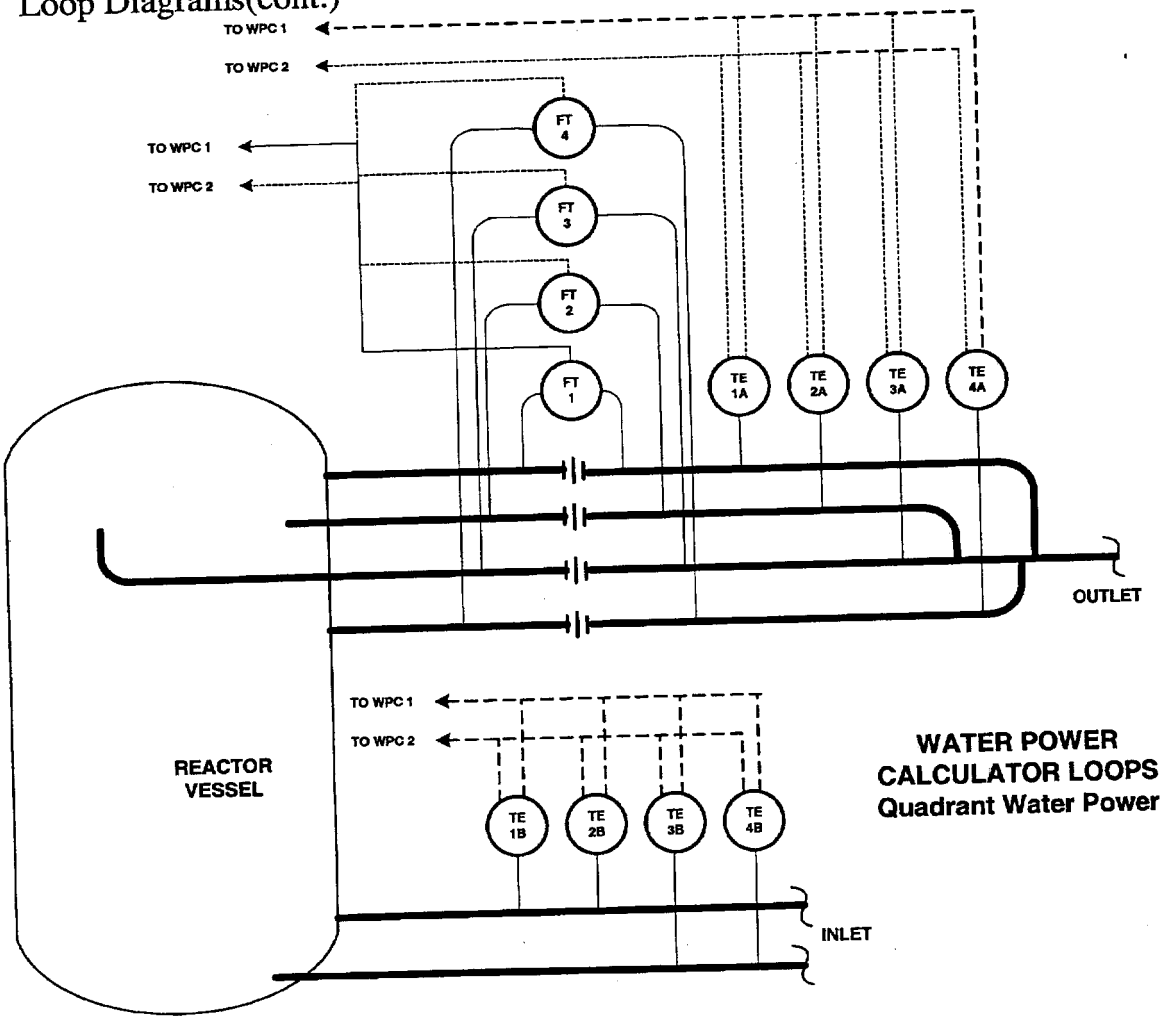

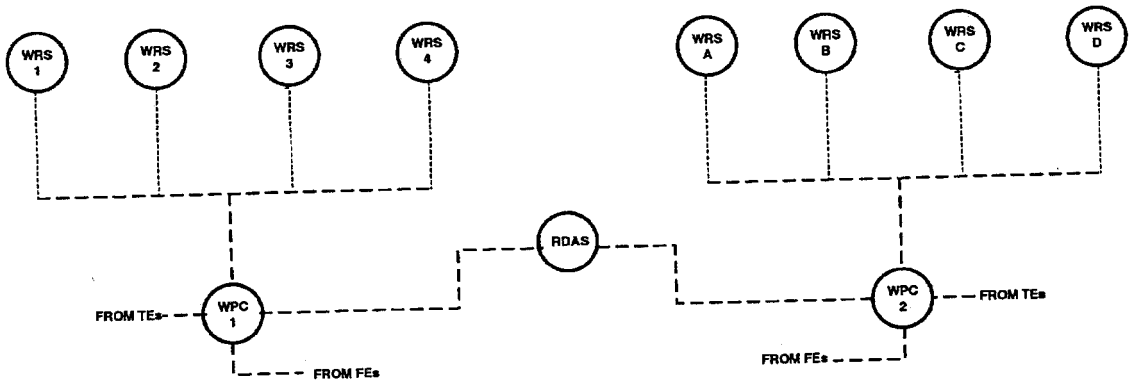

7.0 Summary of Results:

Loop Diagrams(cont.)

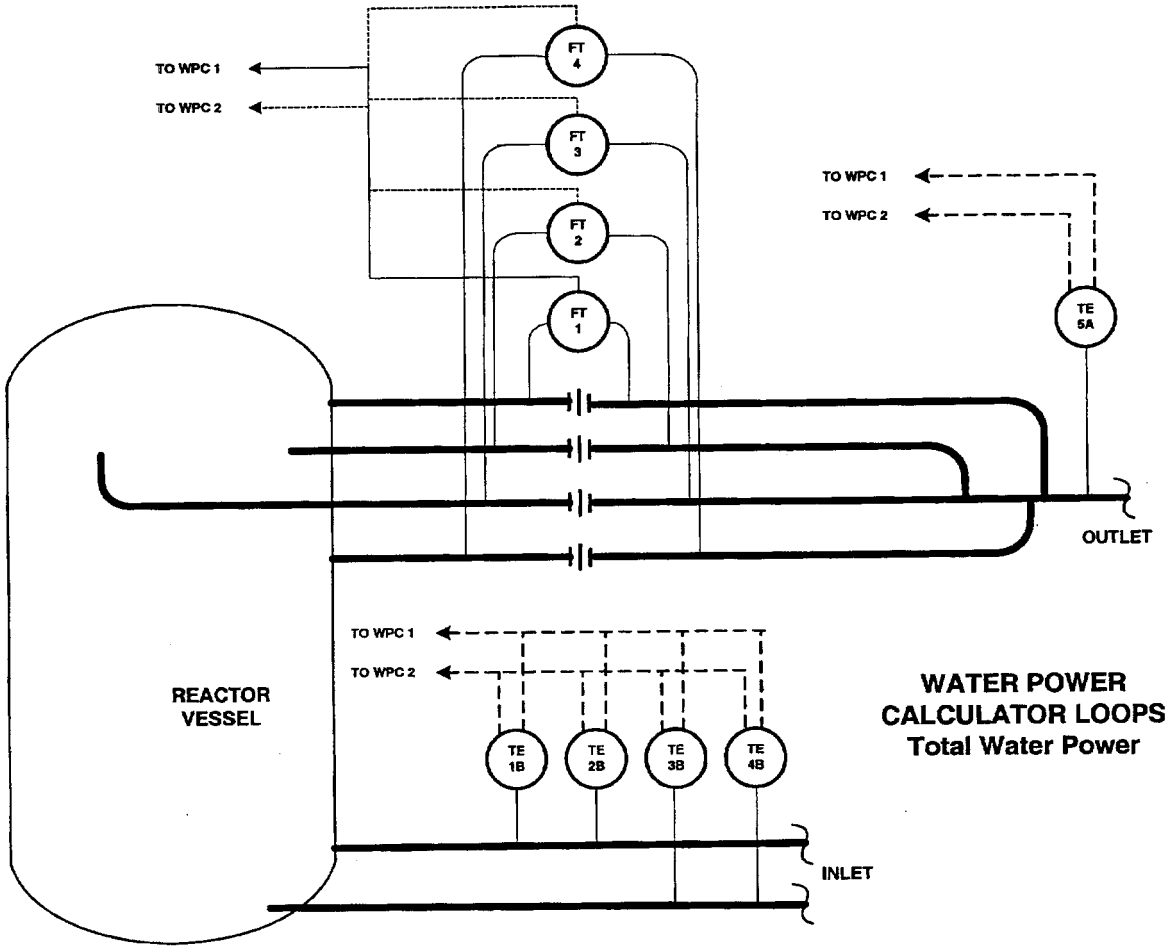

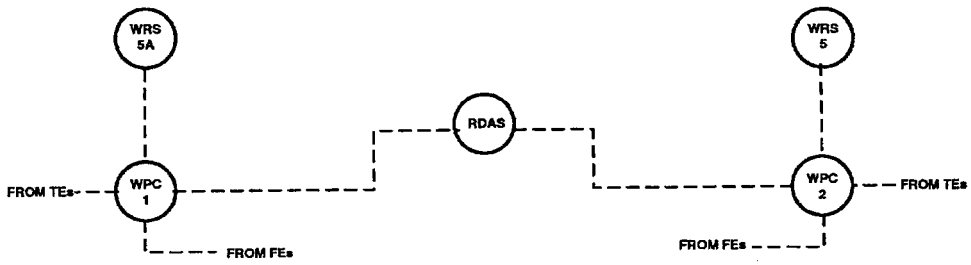

8.0 Conclusions:

The instrumentation addressed in this calculation is sufficiently accurate to perform its safety related function for which it is required.

INTENTIONALLY BLANK