Document ID: ECAR-420
Revision ID: 0
Effective Date: 10/28/08

Engineering Calculations & Analysis

ATR 670-D-323 Concrete Block Wall and Door Frame Seismic Upgrade Analysis

Idaho National Laboratory

The INL is a U.S. Department of Energy National Laboratory operated by Battelle Energy Alliance.

4.3.1.3 Setting Details

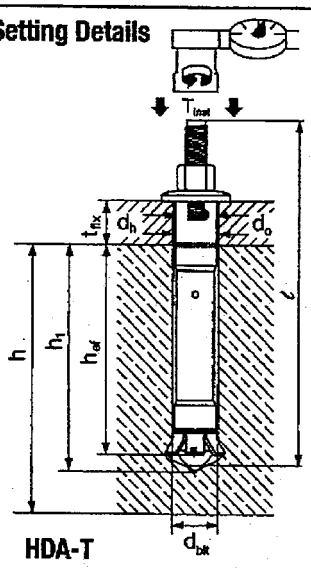

HDA-T

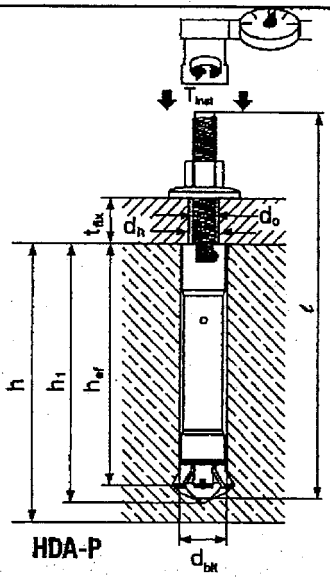

HDA-P

Anchor Nomenclature

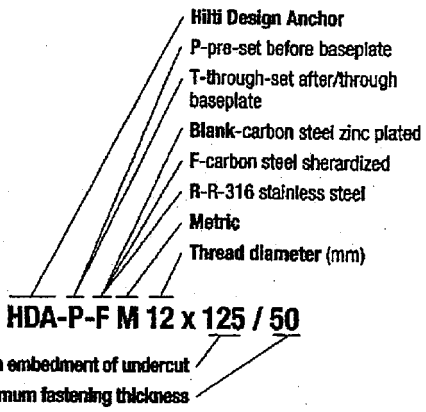

Specification Table

Anchor Size HDA-T/HDA-P		M10 x 100/20	M12 x 125/30	M12 x 125/50	M16 x 190/40	M16 x 190/60	M20 x 250/50	M20 x 250/100
Stop drill bit for HDA-T		TEC-HDA-B 20 x 120	TEC-HDA-B 22 x 155	TEC-HDA-B 22 x 175	TEY-HDA-B 30 x 230	TEY-HDA-B 30 x 250	TE-Y-HDA-B 37 x 300	TE-Y-HDA-B 37 x 350
Stop drill bit for HDA-P		TEC-HDA-B 20 x 100	TEC-HDA-B 22 x 125	TEC-HDA-B 22 x 125	TEY-HDA-B 30 x 190	TEY-HDA-B 30 x 190	TE-Y-HDA-B 37 x 250	TE-Y-HDA-B 37 x 250
Setting Tool		TEC-HDA-ST 20-M10	TEC-HDA-ST 22-M12	TEC-HDA-ST 22-M12	TEY-HDA-ST 30-M16	TEY-HDA-ST 30-M16	TE-Y-HDA-ST 37 - M20	TE-Y-HDA-ST 37 - M20
h Thickness of base material, min.[1]	mm (in.)	140 (5-1/2)	170 (6-5/8)	170 (6-5/8)	250 (9-7/8)	250 (9-7/8)	380 (15)	380 (15)
ℓ Total anchor length	mm (in.)	150 (5.90)	190 (7.48)	210 (8.27)	275 (10.83)	295 (11.61)	360 (14.17)	410 (16.14)
length I.D. code[2]	letter	I	L	N	R	S	V	W
t_{fix} Fastening thickness HDA-T, min.[3]	mm (in.)	10 (0.39)	10 (0.39)	10 (0.39)	15 (0.59)	15 (0.59)	20 (0.79)	20 (0.79)
HDA-T, max.	mm (in.)	20 (0.79)	30 (1.18)	50 (1.97)	40 (1.58)	60 (2.36)	50 (1.97)	100 (3.94)
HDA-P, max.	mm (in.)	20 (0.79)	30 (1.18)	50 (1.97)	40 (1.58)	60 (2.36)	50 (1.97)	100 (3.94)
d_{bit} Nom. dia. of drill bit[4]	mm	20	22	22	30	30	37	37
h_1 Min. depth of drill hole	mm (in.)	107 (4.21)	134.5 (5.30)	134.5 (5.30)	203 (7.99)	203 (7.99)	266 (10.47)	266 (10.47)
h_{ef} Effective anchoring depth	mm (in.)	100 (3.94)	125 (4.92)	125 (4.92)	190 (7.48)	190 (7.48)	250 (9.84)	250 (9.847)
d_h Recommended clearance hole (min.) HDA-T	mm (in.)	21 (7/8)	23 (15/16)	23 (15/16)	32 (1-1/4)	32 (1-1/4)	40 (1-9/16)	40 (1-9/16)
HDA-P	mm (in.)	12 (1/2)	14 (9/16)	14 (9/16)	18 (3/4)	18 (3/4)	22 (7/8)	22 (7/8)
d_o Anchor Diameter, HDA-T	mm (in.)	19 (0.748)	21 (0.827)	21 (0.827)	29 (1.142)	29 (1.142)	36 (1.42)	36 (1.42)
HDA-P	mm (in.)	10 (0.394)	12 (0.472)	12 (0.472)	16 (0.630)	16 (0.630)	20 (0.78)	20 (0.78)
d_w Washer diameter	mm (in.)	27.5 (1.08)	33.5 (1.32)	33.5 (1.32)	45.5 (1.79)	45.5 (1.79)	50 (1.97)	50 (1.97)
S_w Width across flats	mm (in.)	17	19	19	24	24	30	30
$T_{max.}$ Max. tightening torque[5]	Nm (ft-lb)	50 (37)	80 (59)	80 (59)	120 (88)	120 (88)	300 (221)	300 (221)
Sleeve properties								
A_{sl} Cross sectional area	mm² (in²)	196 (0.304)	223 (0.346)	223 (0.346)	445 (0.690)	445 (0.690)	675.6 (1.047)	675.6 (1.047)
S_{sl} Elastic section modulus	mm³ (in³)	596 (0.0364)	779 (0.0475)	779 (0.0475)	2110 (0.1288)	2110 (0.1288)	3950 (0.241)	3950 (0.241)
Bolt properties								
A_b Bolt nominal area	mm² (in²)	78.5 (0.122)	113 (0.175)	113 (0.175)	201 (0.312)	201 (0.312)	314.16 (0.487)	314.16 (0.487)
A_t Bolt tension area	mm² (in²)	58 (0.090)	84.3 (0.131)	84.3 (0.131)	157 (0.243)	157 (0.243)	245 (0.380)	245 (0.380)
S_b Elastic section modulus	mm³ (in³)	67 (0.0041)	117 (0.0071)	117 (0.0071)	293 (0.0179)	293 (0.0179)	541.3 (0.033)	541.3 (0.033)
A_{bsg} Undercut bearing area[6]	mm² (in²)	260 (0.403)	354 (0.549)	354 (0.549)	624 (0.967)	624 (0.967)	707.1 (1.096)	707.1 (1.096)

1 Base material thickness as required to minimize splitting as per the CCD design method.

2 Length code in accordance with ICC-ES acceptance criteria AC01.

3 Minimum thickness of fastened part as required to ensure engagement of full sleeve cross section in shear.

4 Metric stop drill bit must be used. See Section 4.3.1.4 for use of matched tolerance diamond core bits.

5 Torque tightening of the anchor is not required for proper set. Torque tightening may reduce initial slip under load and can improve fatigue performance.

6 Recommended area for calculating maximum bearing stress in accordance with the CCD method.

Hammer Drills for Anchor Setting

Anchor Size HDA-T/HDA-P	M10 x 100/20	M12 x 125/30	M12 x 125/50	M16 x 190/40	M16 x 190/60	M20 x 250/50	M20 x 250/100
Drilling system for anchor setting	TE24, TE25 first gear			TE75 Max. hammering power, TE-76		TE-76	
Single impact energy Joules (ft-lb)	3.7 – 4.7 (2.7 – 3.5)			7.0 – 9.0 (5.2 – 6.6)		7.0 – 8.3 (5.1 – 6.1)	
Speed under load (rpm)	250 – 500			150 – 350		280	

Visit Hilti Online
US www.us.hilti.com
Canada www.ca.hilti.com

4.3.1.3.2.3 Allowable Stress Design

Combined Shear and Tension Loading

$$\left(\frac{N_c}{N_{rec}}\right)^{5/3} + \left(\frac{V_d}{V_{rec}}\right)^{5/3} \leq 1.0$$

HDA, HDA-R and HDA-F Undercut Anchor Allowable Tension Loads in Normal Weight Concrete

Anchor Size, mm	Concrete Capacity[2] Embedment Depth, mm (in.)	$f_c \geq 17.4$ MPa (2,500 psi) Tension, kN (lb)	Steel Capacity[1] Tension, kN (lb)
M10	100 (4)	15.4 (3,466)	20.7 (4,660)
M12	125 (5)	23.3 (5,235)	29.8 (6,710)
M16	190 (7.5)	40.9 (9,187)	53 (11,930)
M20	250 (9.8)	68 (15,287)	83 (18,645)

HDA, HDA-R and HDA-F Undercut Anchor Ultimate Tension Loads in Normal Weight Concrete[3]

Anchor Size, mm	Concrete Capacity[2] Embedment Depth, mm (in.)	$f_c \geq 17.4$ MPa (2,500 psi) Tension, kN (lb)
M10	100 (4)	47 (10,560)
M12	125 (5)	71 (15,954)
M16	190 (7.5)	127 (28,621)
M20	250 (9.8)	204 (45,744)

1 Provided the anchor is placed at or greater than critical edge and spacing distances, the steel capacity can be used. Steel capacity is based on the minimum mechanical properties, and calculated per AISC equation: 0.33AgFu.

2 When edge or spacing influence factors are involved, apply them to concrete capacity values.

3 All ultimate load values represent the average values obtained in testing.

HDA, HDA-R and HDA-F Undercut Anchor Allowable[2] Shear Loads in Concrete

Anchor Size, mm	Embedment Depth, mm (in.)	$f_c \geq 17.4$ MPa (2,500 psi) Shear, kN (lb)	
		HDA-P	HDA-T
M10	100 (4)	4.6 (1,027)	28.7 (6,453)
M12	125 (5)	12.2 (2,750)	31.2 (7,005)
M16	190 (7.5)	23.3 (5,240)	52.6 (11,635)
M20	250 (9.8)	33.2 (7,460)	81.0 (18,210)

HDA, HDA-R and HDA-F Undercut Anchor Ultimate Shear Loads in Concrete[1]

Anchor Size, mm	Embedment Depth, mm (in.)	$f_c \geq 17.4$ MPa (2,500 psi) Shear, kN (lb)	
		HDA-P	HDA-T
M10	100 (4)	29 (6,516)	96 (21,640)
M12	125 (5)	42 (9,510)	130 (29,140)
M16	190 (7.5)	75 (16,930)	221 (49,700)
M20	250 (9.8)	120.6 (27,100)	313 (70,400)

1 All ultimate loads represent the average values obtained in testing

2 Allowable loads determined by 5% fractile. See Section 2.2.3.

Anchor Spacing and Edge Distance Guidelines (see Anchoring Technology Section 4.1.3)

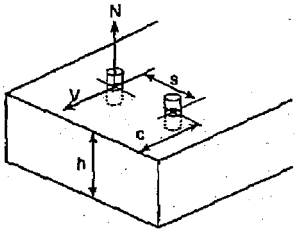

Anchor Size	h_{ef} mm (in.)
M10	100 (3.94)
M12	125 (4.92)
M16	190 (7.48)
M20	250 (9.84)

Anchor Spacing Adjustment Factors

s = Actual Spacing

s_{min} = 1.0 h_{ef}

s_{cr} = 3.0 h_{ef}

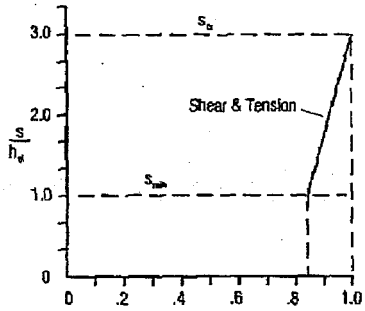

Anchor Spacing Adjustment Factor (f_A)

Edge Distance Adjustment Factors

c = Actual edge distance

c_{min} = 0.8 h_{ef}	HDA-T Shear
c_{cr} = 2.0 h_{ef}	
c_{min} = 0.8 h_{ef}	HDA-P Tension & Shear
c_{cr} = 1.5 h_{ef}	HDA-T Tension

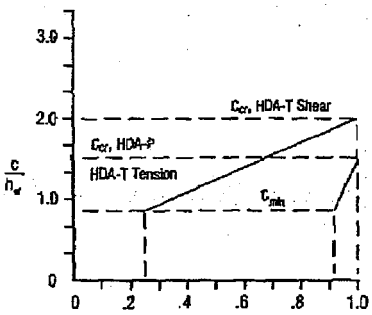

Edge Distance Adjustment Factor (f_{RV}, f_{RN})

Load Adjustment Factor Anchor Spacing, f_A					Load Adjustment Factor Edge Distance, f_R									
HDA Tension/Shear					HDA-P Tension/Shear HDA-T Tension					HDA-T Shear				
Spacing	Anchor Diameter				Edge Dist.	Anchor Diameter				Edge Dist.	Anchor Diameter			
s, mm (in.)	M10	M12	M16	M20	c, mm (in.)	M10	M12	M16	M20	c, mm (in.)	M10	M12	M16	M20
100 (4)	0.84				80 (3-1/8)	0.91				80 (3-1/8)	0.26			
110 (4-3/8)	0.85				90 (3-1/2)	0.92				90 (3-1/2)	0.32			
125 (4-7/8)	0.86	0.84			100 (4)	0.94	0.91			100 (4)	0.38	0.28		
135 (5-5/16)	0.87	0.85			110 (4-3/8)	0.95	0.92			115 (4-1/2)	0.48	0.33		
150 (5-7/8)	0.88	0.86			120 (4-3/4)	0.96	0.93			130 (5-1/8)	0.57	0.41		
175 (6-7/8)	0.90	0.87			140 (5-1/2)	0.99	0.95			152 (6)	0.71	0.52	0.26	
190 (7-1/2)	0.91	0.88	0.84		150 (5-7/8)	1.00	0.96			180 (7)	0.88	0.66	0.35	
225 (8-7/8)	0.94	0.90	0.85		152 (6)		0.96	0.91		200 (7-7/8)	1.00	0.76	0.42	0.26
250 (9-7/8)	0.96	0.92	0.86	0.84	160 (6-1/4)		0.97	0.92		225 (8-7/8)		0.88	0.50	0.32
275 (10-7/8)	0.98	0.94	0.87	0.85	188 (7-3/8)		1.00	0.93		250 (9-7/8)		1.00	0.58	0.38
300 (11-7/8)	1.00	0.95	0.88	0.86	200 (7-7/8)			0.94	0.91	275 (10-7/8)			0.66	0.45
325 (12-3/4)		0.97	0.90	0.86	220 (8-5/8)			0.96	0.92	300 (11-7/8)			0.74	0.51
375 (14-3/4)		1.00	0.92	0.88	240 (9-1/2)			0.97	0.93	320 (12-1/2)			0.81	0.56
450 (17-3/4)			0.95	0.90	260 (10-1/4)			0.98	0.94	340 (13-3/8)			0.87	0.61
500 (19-5/8)			0.97	0.92	270 (10-5/8)			0.99	0.95	360 (14-1/8)			0.94	0.66
570 (22-1/2)			1.00	0.94	285 (11-1/4)			1.00	0.95	380 (15)			1.00	0.71
600 (23-5/8)				0.95	300 (11-7/8)				0.96	400 (15-3/4)				0.76
650(25-9/16)				0.97	325 (12-3/4)				0.97	425 (16-3/4)				0.82
700(27-9/16)				0.98	350 (13-3/4)				0.99	450 (17-3/4)				0.88
750 (29-1/2)				1.00	375 (14-3/4)				1.00	475 (18-3/4)				0.94
										500 (19-5/8)				1.00
s_{min} = 1.0 h_{ef} s_{cr} = 3.0 h_{ef}					c_{min} = 0.8 h_{ef} c_{cr} = 1.5 h_{ef}					c_{min} = 0.8 h_{ef} c_{cr} = 2.0 h_{ef}				
$f_{AN} = 0.08 \frac{s}{h_{ef}} + 0.76$					$f_{RN} = 0.128 \frac{c}{h_{ef}} + 0.808$					$f_{RV} = 0.62 \frac{c}{h_{ef}} - 0.236$				
for $s_{cr} > s > s_{min}$					for $c_{cr} > c > c_{min}$					for $c_{cr} > c > c_{min}$				

Appendix E

MathCAD Version 14 Software Validation

Refer to Engineering Calculations and Analysis Report, "Computer Code Validation" Section for computer and software information.

MathCAD Version 14

All MathCAD calculations performed in this ECAR consist of basic mathematical equations containing addition, multiplication, and division operators. In order to V&V MathCAD 14, a mathematical equation, containing all the previously mentioned operators, were taken and compared to hand calculations performed using a Texas Instruments Voyage 200 calculator. The original MathCAD equation has been modified by inserting a "v" in the super subscript of each variable to differentiate between the original and V&V equations. Some of the variable values have also been changed in the V&V equation.

$W_{tv} := 50 \cdot lbf$

$a_{pv} := 1.0$

$R_{pv} := 2.5$

$I_{pv} := 1.5$

$h_{uhv} := 101.5in$

$z_{uhv} := 12in$

$F_{av} := 1.2$

$S_{sv} := 0.386$

$S_{MSv} := (F_{av})(S_{sv})$

$S_{MSv} = 0.463$

$S_{DSv} := \left(\frac{2}{3}\right)(S_{MSv})$

$S_{DSv} = 0.309$

$$F_{puhv} := \frac{(0.4)(a_{pv})(S_{DSv})(W_{tv})}{\frac{R_{pv}}{I_{pv}}}\left[1 + 2\left(\frac{z_{uhv}}{h_{uhv}}\right)\right]$$

$F_{puhv} = 4.582 \cdot lbf$

HAND CALCULATIONS

$W_{pv} = 50\,lbf$

$a_{pv} = 1.0$

$R_{pv} = 2.5$

$I_{pv} = 1.5$

$h_{wlv} = 101.5\,in$

$z_{wlv} = 12\,in$

$F_{av} = 1.2$

$S_{DS} = 0.386$

$S_{MSv} = (F_{av})(S_{DS}) \rightarrow S_{MSv} = (1.2)(0.386) \rightarrow \underline{\underline{S_{MSv} = .4632}}$

$S_{DSv} = \left[\frac{2}{3}\right](S_{MSv}) \rightarrow S_{DSv} = \left[\frac{2}{3}\right](.4632) \rightarrow \underline{\underline{S_{DSv} = .3088}}$

$$F_{pwlv} = \frac{(0.4)(a_{pv})(S_{DSv})(W_{pv})}{\frac{R_{pv}}{I_{pv}}}\left[1 + 2\left[\frac{z_{wlv}}{h_{wlv}}\right]\right]$$

$$\rightarrow F_{pwlv} = \frac{(0.4)(1.0)(.3088)(50\,lbf)}{\frac{2.5}{1.5}}\left[1 + 2\left[\frac{12\,in}{101.5\,in}\right]\right]$$

$\rightarrow \boxed{F_{pwlv} = 4.584\,lbf}$

ENGINEERING CALCULATIONS AND ANALYSIS REPORT

ECAR No.: ECAR-420 ECAR Rev. No.: 0 Project File No.: Date: 10/23/08

Title: ATR 670-D-323 Concrete Block Wall and Door Frame Seismic Upgrade Analysis

1. Index Codes

Building/Type: TRA-670 SSC ID: 670-D-323 Site Area: ATR Complex

2. Quality Level: 1 RTC-QLD-000633

3. Objective/Purpose

The purpose of this Engineering Calculations and Analysis Report (ECAR), is to perform calculations to support the installation of a seismic bracket per INL Drawing 601091.

The DC power supply for 670-M-11 emergency coolant pump, (which is safety related per SAR-153), penetrates the concrete block wall above door 670-M-323, located in the 1st Basement of ATR. This wall has been identified by the ARES Corporation, as a potential seismic weakness. The new bracket and associated anchors will tie the 670-D-323 door frame and concrete block wall to the ATR canal wall.

4. Conclusions/Recommendations

Based upon this analysis, it is recommended that the proposed seismic bracket and anchorage design be installed per INL Drawing 601091.

In conclusion, the new bracket and associated anchors will add the required support to the ATR 670-D-323 door frame to prevent a failure of the concrete block wall and 670-M-11 DC power supply during a PC-4 seismic event. This modification will ensure that 670-M-11 will perform its safety function.

5. Review (R) and Approval (A) and Acceptance (Ac)[1]:

		Typed Name/Organization	Signature/Date[2]
Performer/Author		B. L. Moon/W411	10/29/08
Technical Checker	R	R. R. Winn/W221	Pages checked: All 10/28/08
Independent Peer Reviewer[3]	R	S. R. Jensen/W210	10/29/08
Performer's Manager	A	S. W. Monk/W411	10/29/08
Requester	Ac	C. W. Brooks/W221	10/29/08
Nuclear Safety[3]	Ac	N/R	
Document Control		B. R. Pike/GB62	Billie R. Pike 10/30/08

1 Review and Approval are required. See LWP-10200 for definitions and responsibilities.
2 An Electronic Change Request (ECR) indicating final review and concurrence by the listed individuals can be used in lieu of signatures.
3 If Required, per LWP-10200.

6. Additional Distribution: (Name and Mail Stop)	Document Control:

ECAR No.: ECAR-420 ECAR Rev. No.: 0 Project File No.: Date: 10/23/08

Title: ATR 670-D-323 Concrete Block Wall and Door Frame Seismic Upgrade Analysis

Contents

Scope and Brief Description 2
Design Inputs and Sources 2
Background 2
Assumptions 2
Computer Code Validation 2
Body 3
Recommendations 3
References 3
Appendix A 3
Appendix B 4
Appendix C 5
Appendix D 6
Appendix E 7
..... 8

Appendixes

Appendix A – Anchorage and Material Analysis
Appendix B – Engineering Calculations and Analysis Plan (ECAP)
Appendix C – Load and Moments Diagram
Appendix D – Hilti HDA-T Undercut Anchor Vendor Data
Appendix E – MathCAD Version 14 Software Validation

Scope and Brief Description

The scope of this analysis is to analyze the new bracket and associated anchorage, as shown on INL Drawing 601091, to be installed on the Advanced Test Reactor (ATR) 670-D-323 southeast side of the door frame and north side of the ATR concrete canal wall. The bracket and anchorage need to be designed to prevent the doorway from collapsing during an ATR Safe Shutdown Earthquake (SSE) seismic event.

Design Inputs and Sources

The allowable stresses for this analysis will be determined using American Institute of Steel Construction (AISC) Manual of Steel Construction, Allowable Stress Design (Ref. 1).

Seismic loads applied to the concrete block and shielding walls in TRA-670 is per Reference 2.

Background

During a seismic evaluation of ATR, performed by the ARES Corporation, the ATR 670-D-323 door frame and concrete block wall were identified as possible points of failure in a seismic event. The ATR Emergency Coolant Pump 670-M-11, (which is required to operate following an ATR Safe Shutdown Earthquake (SSE)), power cable conduit runs through the concrete block wall above 670-D-323. If the wall was to collapse, the 670-M-11 power cable may be severed, which would disable the 670-M-11 emergency pump.

Assumptions

None

ECAR No.: ECAR-420 ECAR Rev. No.: 0 Project File No.: Date: 10/23/08

Title: ATR 670-D-323 Concrete Block Wall and Door Frame Seismic Upgrade Analysis

Computer Code Validation

a. Computer type: Dell Precision 670, INL Property# 386768
b. Computer program name and revision: MathCAD, Version 14
c. Inputs: See Appendix A
d. Outputs: See Appendix A
e. Evidence of, or reference to, computer program validation: See Appendix E
f. Bases supporting application of the computer program to the specific physical problem: MathCAD is a mathematical computing software developed specifically to perform this type of calculations.

Body

See Appendix A

Recommendations

Based upon this analysis, it is recommended that the proposed bracket and anchorage design be installed per INL Drawing 601091.

References

1. *Manual of Steel Construction Allowable Stress Design, American Institute of Steel Construction* (AISC), Ninth Edition
2. *Seismic Evaluation of Concrete Block and Shielding Walls in TRA-670*, Calculation No. 0602301.01-S-007, Rev 0, ARES Corporation, 07/08/08.
3. INL Drawing 121053, Rev 7, "Reactor Building First Basement Concrete SH #2"
4. American Society of Testing and Materials (ASTM), A36 Structural Steel, 1992
5. *Mechanical Engineering Design*, Seventh Edition, 2004, Shigley, Mischke, Budynas

Appendix A

Anchorage and Material Analysis

The following calculations are divided into five sections:

Section 1, Force and Moment Calculations
Section 2, Anchor Force Calculations
Section 3, Bracket Material Stress Calculations
Section 4, Connection Plate Material Stress Calculations
Section 5, Connection Plate Weld Calculations

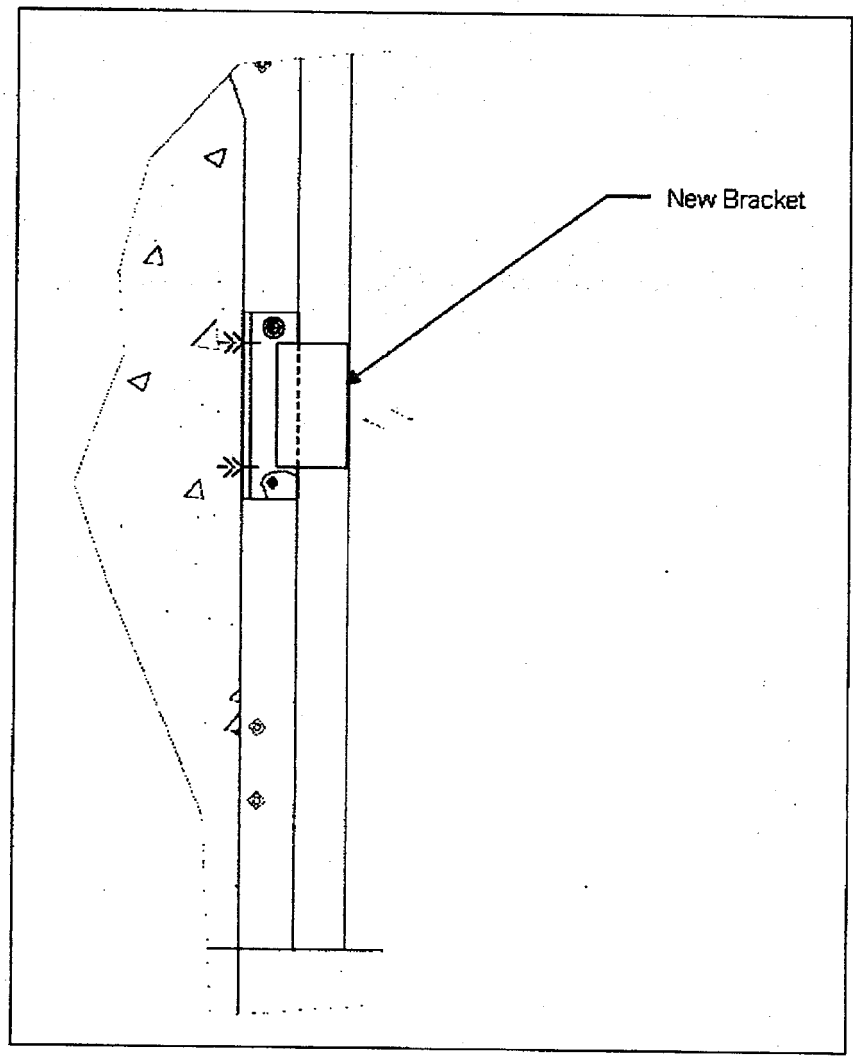

Figure A1
New Bracket

Section 1 - Force and Moment Calculations

Force and moment values; M_1, F_2, and M_3 were taken from the ARES Corporation Report "Seismic Evaluation of Concrete Block and Shielding Walls in TRA-670." (Ref. 2). These values were calculated for the existing bracket, which is mounted along the angled, approx. 20 degrees from vertical, ATR Canal Wall, as shown in Figure 4-1 in Appendix C. The new bracket, as shown in Figure A1, is oriented vertically, thus the given moment values previously mentioned were divided by cos 20 degrees to provide accurate values for anchorage and material calculations.

$M_1 := 3490 lbf \cdot in$ — Moment M_1 (see Appendix C)

$F_2 := 1560 lbf$ — Force F_2 (see Appendix C)

$M_3 := 13160 lbf \cdot in$ — Moment M_3 (see Appendix C)

$\theta := 20 deg$ — Approximate Angle of Canal Wall (Ref. 3)

$$M_{1a} := \frac{M_1}{\cos(\theta)}$$ — Calculated Moment M_{1a}

$M_{1a} = 3713.98 \cdot lbf \cdot in$

$$M_{3a} := \frac{M_3}{\cos(\theta)}$$ — Calculated Moment M_{3a}

$M_{3a} = 14004.58 \cdot lbf \cdot in$

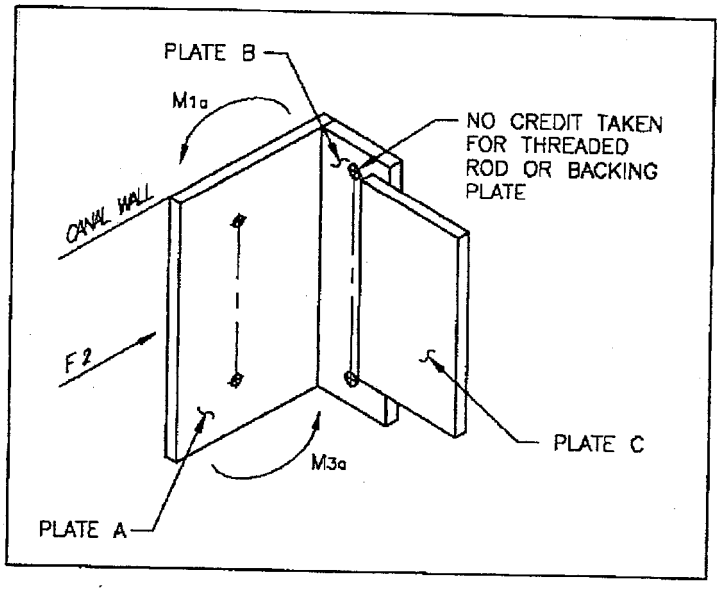

Figure A2
Force, Moments, and Plate Identification
Bracket Detail

Section 2 - Anchor Force Calculations

The following calculations were performed to determine anchor shear and tension loads. Dimensional distances and Moments d_1 - d_5, M_{1a} and M_{3a}, respectively, are shown on Figure A3, correspond with the following shear and tension equations.

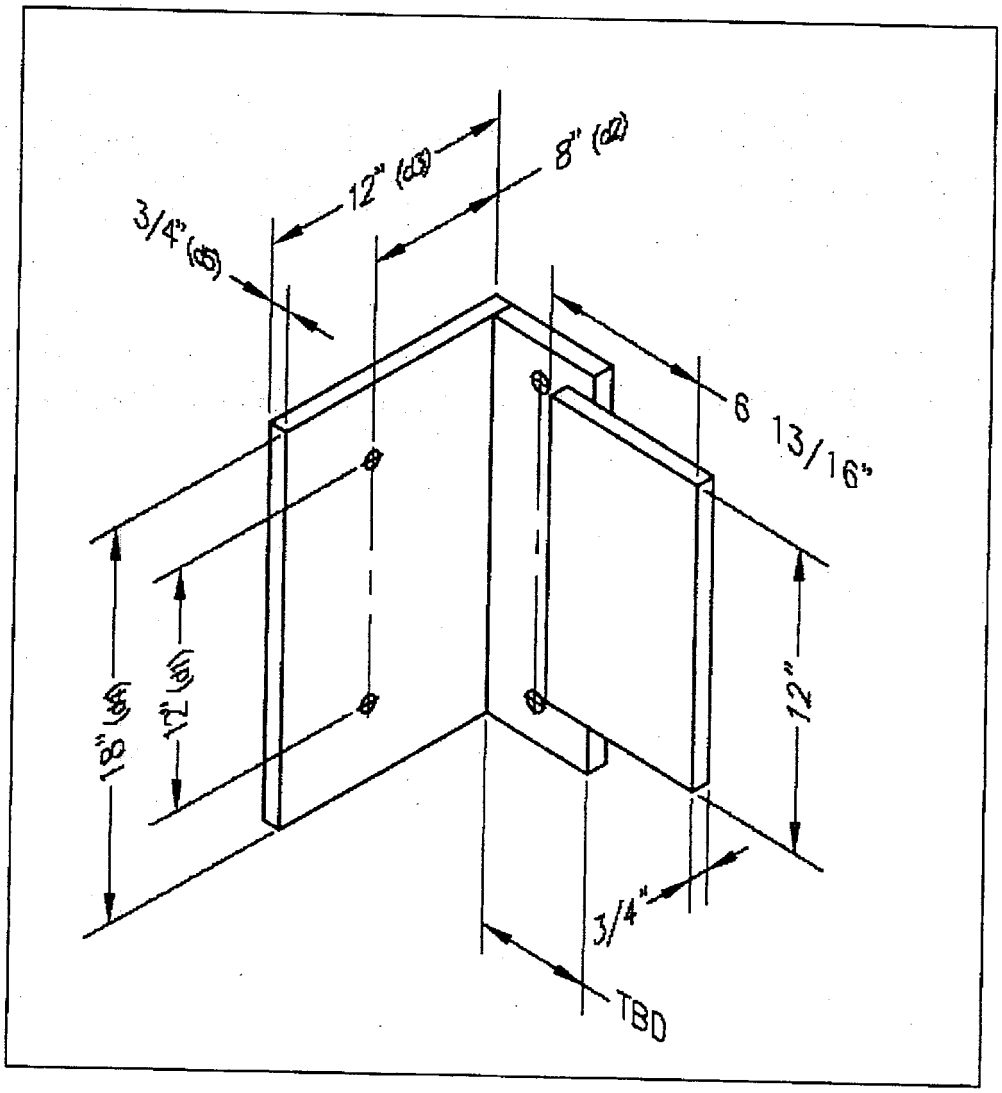

Figure A3
Dimensional Identification
Bracket Detail

Shear

$anchors_n := 2$ — Number of Anchors

$d_1 := 12in$ — Vertical Distance Between Anchor Holes (see Figure A3)

$d_2 := 8in$ — Horizontal Distance from edge of Plate A to Center of Anchor Hole (see Figure A3)

$d_3 := 12in$ — Horizontal Distance from edge to edge of Plate A (see Figure A3)

$F_{1anchor} := \frac{M_{1a}}{d_1}$ — Anchor Shear Force Induced by Moment M_{1a}

$F_{1anchor} = 309.5 \cdot lbf$

$F_{2anchor} := \frac{F_2}{anchors_n}$ — Anchor Shear Force (per anchor) induced by Force F_2

$F_{2anchor} = 780 \cdot lbf$

$F_{Tanchor} := F_{1anchor} + F_{2anchor}$ — Total Anchor Shear Force

$F_{Tanchor} = 1089.5 \cdot lbf$

Tension

$F_{tension} := \frac{M_{3a}}{(d_3 - d_2)(anchors_n)}$ — Anchor Pullout (Tension) Force (per anchor) induced by Moment M_{3a}

$F_{tension} = 1750.57 \cdot lbf$

With the calculated shear and tension loads of approx 1100 lbf and 1750 lbf, respectively, a Hilti M12 HDA-T Undercut Anchor will be used. Anchor ratings taken from the Hilti vendor data are shown in Table A4. The ATR canal wall is composed of 3000 psi concrete, but the Hilti vendor data for shear and tension ratings only specifies 2500 psi concrete, thus using the ratings for 2500 psi concrete is a conservative approach. The recommended spacing for these anchors for full capacity is 14-3/4". The spacing for this design is 12", so the anchors will be de-rated by 0.95 (see Appendix D). With anchor design considerations above, the Hilti M12 HDA-T Undercut Anchor will be sufficient, with ample margin, for this design.

M12 HDA-T Load Rating Table		
	2500 psi Concrete (lbf)	Steel (lbf)
Shear	7005	
(De-rated Value)	(6655)	
Tension	5235	6710
(De-rated Value)	(4973)	(6375)

Table A4
M12 HDA-T Load Rating
(Allowable Shear and Tension Loads)

Section 3 - Bracket Material Stress Calculations

$\sigma_{steel} := 36000psi$

Minimum Yield Stress of ASTM A36 Steel
(Ref. 4, Page 355, Table 3)

$\sigma_a := (\sigma_{steel})(0.60)$

Calculated Allowable Strength
(Ref. 1, Page 5-49, Equation F3-3)

$\sigma_a = 21600 \cdot psi$

$d_4 := 18in$

Plate A - Vertical Dimension
(see Figure A3)

$d_5 := .750in$

Plate A - Thickness
(see Figure A3)

$I_A := \frac{1}{12}(d_5)(d_4)^3$

Moment of Inertia
(Plate A - Vertical Orientation)

$I_A = 364.5 \cdot in^4$

$I_B := \frac{1}{12}(d_4)(d_5)^3$

Moment of Inertia
(Plate A - Horizontal Orientation)

$I_B = 0.63 \cdot in^4$

$c_{Av} := \frac{d_4}{2}$

Distance from outer edge to middle of plate
(Plate A - Vertical Orientation)

$c_{Av} = 9\,in$

$c_{Ah} := \frac{d_5}{2}$

Distance from outer edge to middle of plate
(Plate A - Horizontal Orientation)

$c_{Ah} = 0.38\,in$

$\sigma_A := \frac{(M_{1a})(c_{Av})}{I_A}$

Bending Stress Induced by Moment M_{1a}
(Plate A - Vertical Orientation)

$\sigma_A = 9157psi$

$$\sigma_B := \frac{(M_{3a})(c_{Ah})}{I_B}$$

Bending Stress Induced by Moment M_{3a}
(Plate A - Horizontal Orientation)

$\sigma_B = 8299.01$ psi

$$\sigma_{AB} := \sqrt{\sigma_A^{\ 2} + \sigma_B^{\ 2}}$$

Combined Bending Stress Induced by Moments M_{1a} and M_{3a}
(Allowable Stress = 21,600 psi)

$\sigma_{AB} = 8299.52$ psi **OK**

Plate B will not be analyzed because it will be enveloped by the Connection Plate C analysis in Section 4. Plate B will be the same thickness as Plate A.

The weld connection between Plates A & B will be a full penetration weld (performed in the shop); therefore, the stress on this weld joint will be similar to σ_{AB} above. The allowable stress on the weld filler material is 21,000 psi (see Section 5), which is greater than σ_{AB} above. Based on this, no further analysis will be performed on this weld connection.

Section 4 - Connection Plate Material Stress Calculations

$b_C := 12in$ — Plate C - Base Dimension

$h_C := .75in$ — Plate C - Thickness

$I_{xC} := \frac{1}{12}(b_C)(h_C)^3$ — Plate C - X Moment of Inertia

$I_{xC} = 0.42 \cdot in^4$

$I_{yC} := \frac{1}{12}(h_C)(b_C)^3$ — Plate C - Y Moment of Inertia

$I_{yC} = 108 \cdot in^4$

$J_C := I_{xC} + I_{yC}$ — Plate C - Second Polar Moment of Area

$J_C = 108.42 \cdot in^4$

$\tau_{Ct} := \frac{(M_{1a})\left(\frac{b_C}{2}\right)}{J_C}$ — Torsional Shear Stress induced by Moment M_{1a}

$\tau_{Ct} = 20565 \cdot psi$

$M_{F2} := (F_2)(6in)$ — Moment Induced by Force F_2

$M_{F2} = 9360 \cdot lbf \cdot in$

$\sigma_{Cb} := \frac{(M_{F2} + M_{3a})\left(\frac{h_C}{2}\right)}{I_{xC}}$ — Bending Stress induced by Moments M_{F2} and M_{3a}

$\sigma_{Cb} = 20768.52 \cdot psi$

$S_{total} := \tau_{Ct} + \sigma_{Cb}$ — Total Stress induced by Moments M_{F2}, M_{1a}, and M_{3a} (Allowable Stress = 21,600 psi)

$S_{total} = 20974.04 \cdot psi$ **OK**

Section 5 - Connecting Plate Weld Calculations

The following calculations were performed to determine weld bending and shear stresses. The connecting plate (Plate C) will consist of two identical welds, one connecting the plate to the doorway channel and the other connecting the plate to the bracket. The connecting plate will be welded to the existing door frame, which is made from 3/16" thick channel, using a 3/16" fillet weld. Since the welds are identical and have the same loading characteristics, this analysis will only address the welds connecting the doorway channel and connecting plate.

Stress Due to Moment M_{1a}

$b_w := 1.75in$ — Weld Horizontal Distance

$d_w := 12in$ — Weld Vertical Distance

$h_w := .1875in$ — Weld Size

$$J_u := \frac{8(b_w)^3 + 6(b_w)(d_w)^2 + d_w^3}{12} - \frac{b_w^4}{2b_w + d_w}$$

Weld Unit Second Polar Moment of Area
(Ref. 5, Page 472, Table 9-1)

$J_u = 272.97 \cdot in^3$

$J_w := 0.707(J_u)(h_w)$

Weld Second Polar Moment of Area
(Ref. 5, Page 471, Equation 9-6)

$J_w = 36.19 \cdot in^4$

$$\tau_{M1a} := \frac{(M_{1a})\left(\frac{d_w}{2}\right)}{J_w}$$

Weld Torsional Shear Stress due to Moment M_{1a}

$\tau_{M1a} = 615.83 \cdot psi$

Stress Due to Moment F_2

$$I_u := \frac{d_w^2}{12}(6 \cdot b_w + d_w)$$

Weld Unit Second Moment of Area
(Ref. 5, Page 476, Table 9-2)

$I_u = 270 \cdot in^3$

$I_w := 0.707(h_w)(I_u)$

Weld Second Moment of Area
(Ref. 5, Page 475, Section 9-4c)

$I_w = 35.79 \cdot in^4$

$$x_{bar} := \frac{b_w^{\,2}}{2(b_w) + d_w}$$

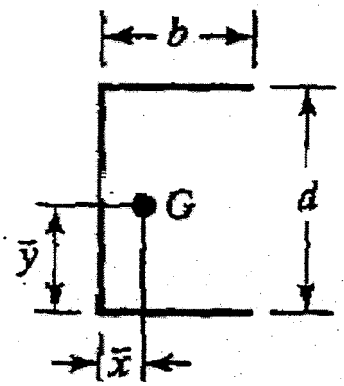

$x_{bar} = 0.2\,in$

$c_w := b_w - x_{bar}$

$c_w = 1.55\,in$

$$\sigma_{F2} := \frac{(M_{F2})(c_w)}{I_w}$$

Weld Bending Stress due to Moment F_2

$\sigma_{F2} = 405.98\,psi$

Stress Due to Moment M_{3a}

$$\sigma_{M3a} := \frac{(M_{3a})(c_w)}{I_w}$$

Weld Bending Stress due to Moment M_{3a}

$\sigma_{M3a} = 607.43\,psi$

$\sigma_{70XX} := 70000psi$

Minimum Tensile Strength - 70XX Weld Filler Material

$\sigma_{70XXa} := (\sigma_{70XX})(0.30)$

Calculated Allowable Strength
(Ref. 1, Page 5-70, Table J2.5)

$\sigma_{70XXa} = 21000\,psi$

$WS_{total} := \tau_{M1a} + \sigma_{F2} + \sigma_{M3a}$

Total Combined Weld Stress
(Allowable Stress = 21,000 psi)

$WS_{total} = 1629.23\,psi$ OK

Appendix B

Engineering Calculations and Analysis Plan (ECAP)

Engineering Calculations and Analysis Plan
ATR 670-D-323 Concrete Block Wall and Door Frame Seismic Upgrade Analysis

1. SCOPE

The purpose for this Engineering Calculations and Analysis Plan (ECAP) is to document analyses to be performed, as identified in section 2 of this document, to support the scope.

The scope of the document is to analyze a new bracket and anchorage to be installed on the Advanced Test Reactor (ATR) 670-D-323 concrete block wall and door frame. The bracket and anchorage need to be designed to prevent the doorway from collapsing during an ATR Safe Shutdown Earthquake (SSE) seismic event.

2. DELIVERABLES

The seismic analysis of the ATR 670-D-323 concrete block wall and door frame bracket and anchorage will be completed and an ECAR will be generated to document the results.

3. ASSUMPTIONS

None

4. QUALITY LEVEL

The Quality Level Determination (QLD) for this analysis is covered under RTC-000633 and is Quality Level 1.

5. NATURAL PHENOMENA HAZARDS (NPH) CRITERIA

The NPH for this analysis will be PC-4 seismic per Reference 1.

6. LOAD SCENARIOS AND ACCEPTANCE CRITERIA

Load scenarios and acceptance criteria will be per References 1 (Appendix C) and 2, respectively.

7. VERIFICATION/VALIDATION REQUIREMENTS

This analysis will be technically checked by a competent engineer within the ATR Complex engineering organization and independently peer reviewed by a

competent person within the performer's organization not directly involved with this analysis.

8. BUDGET/SCHEDULE

The estimated cost to complete this analysis is approximately $2,000. The time frame in which this design will be implemented will be determined by ATR Programs management and scheduling department.

9. REFERENCES

1. Seismic Evaluation of Concrete Block and Shielding Walls in TRA-670, Calculation No. 0602301.01-S-007, Rev 0, ARES Corporation, 7/8/08.

2. Manual of Steel Construction Allowable Stress Design, American Institute of Steel Construction, Ninth Edition (AISC), 1989

10. SIGNATURES

Requestor: CW Brooks Date: 10/28/08

Performer: [illegible] Date: 10/28/08

Performer's Manager: [illegible] Date: 10/28/08

Appendix C

Load and Moments Diagram

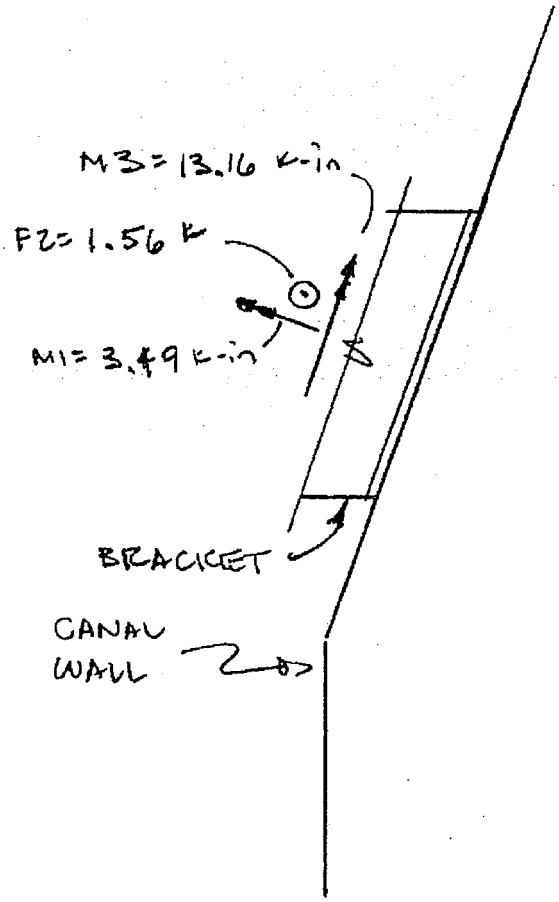

Figure 23-1. Door Frame Bracket Reactions for Strengthening Design.

24.0 QUALITATIVE REVIEW OF FIRE WALLS

Fire walls are identified on the following drawings:

- Drawing No. 623067, *TRA 670, ATR Fire Wall Designation, First Floor Plan- Elev 96'-0"*
- Drawing No. 623068, *TRA 670, ATR Fire Wall Designation, First Basement Floor Plan- Elev 79'-0"*
- Drawing No. 623069, *TRA 670, ATR Fire Wall Designation, Second Basement Floor Plan- Elev 60'-0"*
- Drawing No. 623070, *TRA 670, ATR Fire Wall Designation, Mezzanine Floor Plans*

The fire walls are shown on Figures 24-1 to 24-4. Many of these walls are constructed of concrete block. Concrete block fire walls considered to satisfy PC-4 seismic criteria are highlighted in yellow. These walls are either explicitly included in the seismic evaluation above, or are judged to be acceptable based on similarity to

Appendix D

Hilti HDA-T Undercut Anchor Vendor Data