Document ID: PLN-534
Revision ID: 6
Effective Date: 12/06/07

Plan

Advanced Test Reactor Design Basis Reconstitution Program Plan

Idaho National Laboratory

The INL is a U.S. Department of Energy National Laboratory operated by Battelle Energy Alliance.

D8 Design Basis Reconstitution	
Chapter 15 Review Complete	29SEP05*
Emergency Firewater Injection T&FR Complete	20MAR07*
Fuel Element T&FR Complete	04APR07*
Reactor Core T&FR Complete	18APR07*
RIMS/Confinement T&FR Complete	30MAY07*
Raw Water T&FR Complete	15JUN07*
Primary Coolant System T&FR Complete	29AUG07*
Firewater Supply System T&FR Complete	14SEP07*
Fuel Storage and Handling T&FR Complete	20SEP07*
Plant Protection T&FR Complete	28SEP07*
Facility Fire Protection T&FR Complete	27SEP07*
Facility Single Failure T&FR Complete	29NOV07*
Reactivity Control/Safety Rods T&FR Complete	30NOV07*
Radiation Monitoring System T&FR Complete	06DEC07*
LDW T&FR Complete	13DEC07*
HVAC T&FR Complete	19DEC07*
Control Complex - Control Power Reduction T&FRs	03JAN08*
PWL Piping System T&FR Complete	04JAN08*
Control Complex -Dual Core Diff Pressure T&FRs	10JAN08*
Electric Power Distribution T&FR Complete	15JAN08*
Control Complex - N-16 T&FR Complete	17JAN08*
Control Complex - DCS T&FR Complete	24JAN08*
Control Complex - Uprights, Annun,CRC/CDS T&FR	30JAN08*
Control Complex - Nuc Instruments T&FR Complete	04FEB08*
Buildings & Misc. Structures T&FR Complete	15FEB08*
Control Complex - RDAS,LPDIS, WPO T&FR	21FEB08*

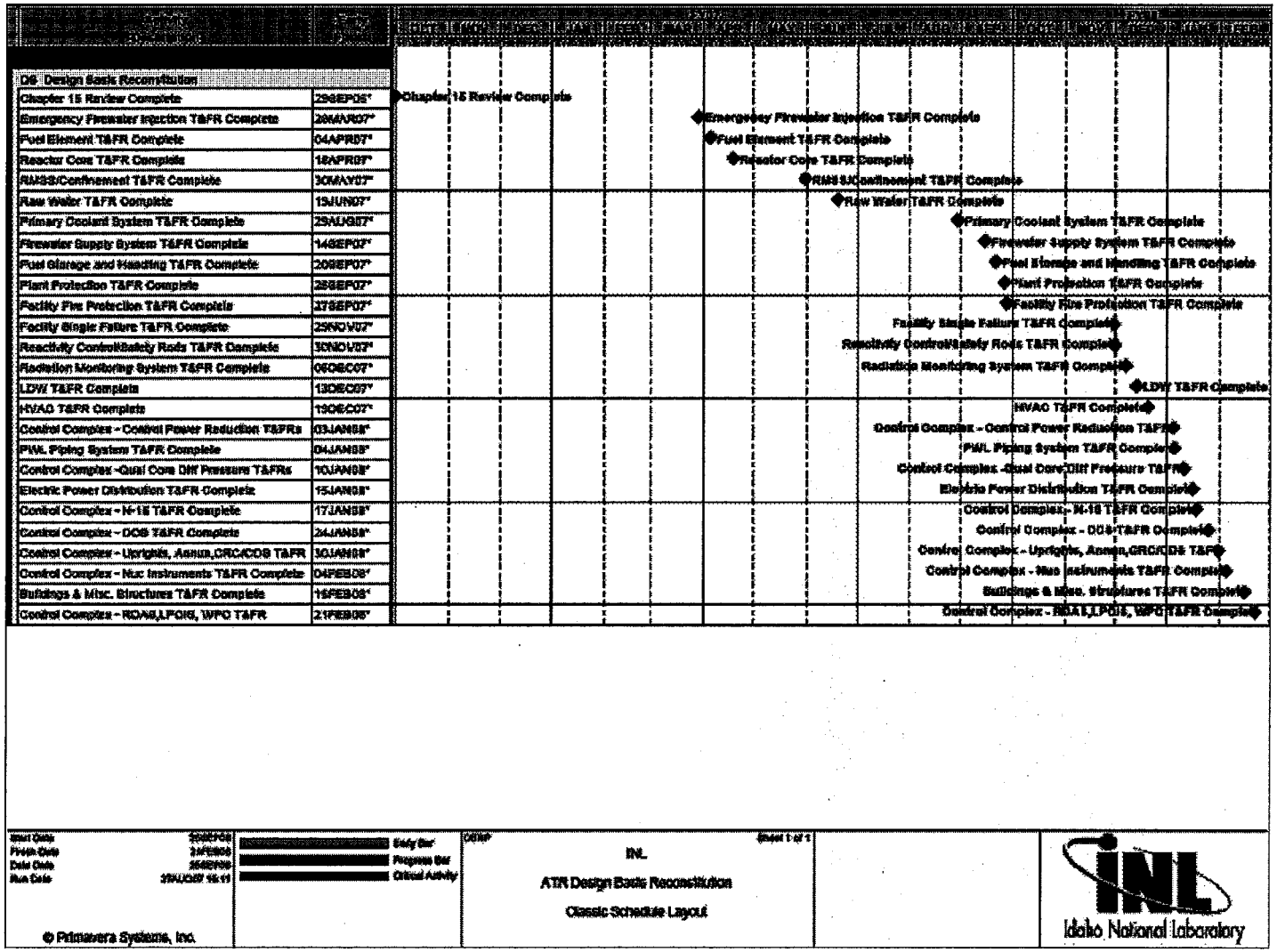

Confirmed gaps that require PISA assessment will be reported promptly to the Facility Manager (FM) in accordance with LWP-18001 and the actions specified in LWP-18001 will be completed. All new or revised confirmed gaps identified by the DBRP will be reported weekly to Reactor Programs management and DOE during periods of ATR DBRP activity. The ATR Operations Safety Board (OSB) will meet quarterly to review confirmed gaps to establish the priority and responsibility for generating detailed corrective action plans for gap resolution. The ATR OSB Charter (CTR-36) includes responsibilities for review of startup and restart of facilities and activities, including supporting hazard analysis, identification, mitigation documentation and safety evaluation, to ensure that the screenings have been properly performed and include appropriate operational controls and readiness activities. The Charter includes responsibility for review of ATR deficiencies backlog periodically to evaluate the overall and combined effect on facility and personnel safety (DOE 2005). The OSB review will determine if there is a need for a focused Gap/USQ resolution effort (DOE 2005). The gap database and the OSB meeting minutes document the results of the prioritization process. The meeting minutes are maintained by the FM (DOE 2005). Once prioritized by the OSB, the confirmed gaps are entered into the INL ICARE system for tracking. Resolution of confirmed gaps that result in the identification of a USQ will be completed in accordance with LWP-18001.

4.4.2 ATR Configuration Management and Design Recovery Planning

The ICARE corrective action plans become the documentation of configuration management and design recovery activities. The collection of confirmed gap related corrective action plans constitute the Configuration Management and Design Recovery Plan required by MCP-3767. As such, the ICARE corrective action plans must be approved by the Site Area Engineering Manager and the Facility Manager per MCP-3767. A Configuration Management and Design Recovery project schedule will be constructed from the collection of ICARE corrective action plans. This will allow adjusting corrective actions and schedules as new confirmed gaps are identified and added to the plan. This project schedule is not included in this ATR DBRP plan.

The DBRP team will aid the Reactor Programs' engineering, maintenance, training and operations organizations in developing and executing corrective action plans. Missing information may be generated using a graded approach potentially involving performing analyses, gathering and documenting information from experienced and knowledgeable engineering, operations, and maintenance personnel (currently employees and retirees), simulating repeating the design process, or establishing current functionality, and accessing the results as design requirements after appropriate review.

5. USE OF INDUSTRY EXPERIENCE

Use of industry engineering consultants is an important part of the development and execution of this plan as evidenced by the use of the industry experience references and assessments of the pilot program. INL applied corporate funded research and development (CFRD) resources to bring in outside expertise from the nuclear power industry to support the DBRP development and planning efforts. Accordingly, industry consultant resources have been used to review the DBRP.

The commercial nuclear power plant industry conducted DBR activities in the early 1980s, and again, in the mid-1990s. The earlier program dealt primarily with inconsistencies between piping structural analyses and physical plant configuration. Operational events occurring in the late 1980s led to utility self-evaluations of plant Design Basis Documentation which, in turn, spawned full-blown DBRPs. The elements of these DBRPs were identical to those addressed in this plan.

A review of the DBRP pilot phase (CM upgrades and population, walk-downs, safety system functional validation, etc.) has been performed by individuals with substantive knowledge of and hands-on experience with industry DBR work. This review resulted in Areva, 2005. Use of industry consultants will be increased in the accelerated DBRP to help ensure that the ATR-DBRP is executed with maximum return on investment.

6. ORGANIZATIONAL RESPONSIBILITIES AND INTERFACES

The DBRP is part of the ATR Life Extension Project (LEP). The ATR LEP Plan defines the interface between the LEP and ATR Programs. The ATR LEP has experienced facility engineering and operations staff. The LEP staff will maintain the DBRP Plan. The DBRP Plan will be approved by ATR LEP management with concurrence from ATR Programs management

The LEP staff will lead the execution of the DBRP Plan. DBRP execution will be performed by a combination of LEP staff and subcontractors. LEP staff will ensure necessary interfaces with the ATR Programs engineering, operations, and maintenance organizations. This interface will ensure ATR Programs participation in the development and execution of the DBRP Plan to ensure ownership, knowledge retention, and achievement of purpose. The interface with the ATR Programs system engineering organization is important since the products of the DBRP (e.g., system boundary definition, TFR) will be approved by the ATR Programs system engineering organization.

7. DEFINITIONS

Confirmed gap. A discrepancy in the facility design basis documentation that has been confirmed by consensus of the DBRP team.

DBRP observations. A comment or statement from a DBRP team member that results from identification of design basis requirements, physical plant configuration validation, safety system functional validation, generation of design basis documents, or accident analysis verification. DBRP observations can be categorized as a physical plant discrepancy, a confirmed gap, or a question. DBRP observations that do not fall into one of these categories are not recorded.

Design Basis. The design basis consists of that information which identifies the specific safety function to be performed by structures, systems, and components (SSC) and the specific values or range of values chosen for controlling parameters as reference bounds for design (NEI 2001). Design basis functions are functions performed by SSC that are (1) required, or otherwise necessary to comply with, regulations, safety analysis commitments, orders, or TSRs or (2) credited in the safety analysis. Design basis values are values or ranges of values established as reference bounds for the plant to meet design basis functional requirements. These values may be (1) established by DOE requirements, (2) derived from or established by the safety analysis, or (3) chosen from an applicable code, standard, or guidance document. The design basis includes basic safety margins included in the design, interfaces with other SSC, including dependencies, and environmental considerations.

Supporting Design Information. The entire set of constraints imposed on the design (e.g., regulatory requirements, system functional requirements, conformance to accepted industry codes and standards, SAR commitments, and vendor interface requirements).

Validation. An activity that provides reasonable assurance that design basis requirements are consistently reflected in the plant physical configuration and those controlled documents used to support plant operations. (NEI 2001)

Verification. An activity that provides reasonable assurance that design basis documents support functional requirements.

8. REFERENCES

Areva, 2005, *Advanced Test Reactor Design Basis Reconstitution Program Assessment Report,* Framatome ANP, Inc. May 9, 2005.

Atkinson, S. A., and Hanson, G. H., 1977, *Advanced Test Reactor Plan Protective System and Technical Specifications Design Basis Report*, RE-E-76-048, EG&G Idaho, Inc., May 1977.

ATR, 2004, ATR Planning Assessment Team letter to E. D. Sellers, *Assessment Team Conclusions and Recommendations*, February 13, 2004.

CFR, 2002, *Safety Basis Requirements*, 10 CFR 830, Code of Federal Regulations, February 4, 2002.

CTR-36, "Charter for the ATR Facility Operations Safety Board."

DeBoisblac, D. R., and Cohen, S., 1965, *Safety Analysis Report Advanced Test Reactor*, IDO-17021, Philips Petroleum Company, April 1965.

DNFSB, 2000, *Configuration Management, Vital Safety Systems*, Defense Nuclear Facilities Safety Board Recommendation 2000-3, Federal Register, Volume 65, Number 52, March 16, 2000, p. 14255.

DOE, 1998, *Content of System Design Descriptions,* DOE-STD-3024-98, U.S. Department of Energy, October, 1998.

DOE, 1992, *Nuclear Safety Analysis Reports*, DOE 5480.23, U.S. Department of Energy, April 30, 1992.

DOE, 1993, *Guide for Operational Configuration Management Program (including adjunct Programs of Design Reconstitution and Material Condition and Aging Management*), DOE-STD-1073-1973, U.S. Department of Energy, November 1993.

DOE, 2005, *Facility Safety*, DOE O 420.1B, U.S. Department of Energy, December 22, 2005.

DOE, 2003a, *Inspection of Environment, Safety, and Health Management and Emergency Management at the Idaho Operations Office and Idaho National Engineering and Environmental Laboratory*, no report number, U.S. Department of Energy Office of Independent Oversight and Performance Assurance, September 2003.

DOE, 2003b, *Configuration Management*, DOE-STD-1073-2003, U.S. Department of Energy, October 2003.

DOE, 2005, *Oversight Report Advanced Test Reactor: Design Basis Reconstitution Program*, no report number, U.S. Department of Energy Idaho Operations Office, April 26, 2005.

LRD-10501, "Configuration Management Requirements"

LWP-10400, "Design Control"

LWP-13840, "Corrective Action System"

LWP-18001, "Unreviewed Safety Questions"

McCracken, R. T., 2004, letter to S. K. Penny, RTMc-01-04, "*Interim Report on the Status of the Advanced Test Reactor Design Basis Reconstitution Program*," August 12, 2004.

MCP-3767, "Configuration Management and Design Recovery Planning"

NEI, 2001, *Design Bases Program Guidelines*, NEI 97-04, Revision 1, Nuclear Energy Institute, February 2001.

PDD-10502, "Configuration Management Program"

RP-0088, "TRA Standard Safety Basis Implementation Checklist"

SAR-153, "Upgraded Final Safety Analysis for the Advanced Test Reactor"

Sehike, L. A., letter to C. A. Thompson, *"Contract No. DE-AC07-051D14517 – Cost Estimate and Funding Profile to Accelerate the Advanced Test Reactor Design Basis Reconstitution Program. June 2005; CCN 201417.*

Sellers, E. D., 2006, letter to D. J. Richardson, "*Direction on Unreviewed Safety Question Issues Resulting from the Office of Environmental, Safety, and Health Review of the Idaho National Laboratory Unreviewed Safety Question Process*," LO-RTC/SMC-06-011, February 15, 2006.

SOW-3049, "Statement of Work for Advanced Test Reactor Design Basis Reconstitution Program Assessment Phase," August 23, 2005.

SP-10.2.2.7, "SDD and ECF/FCF Numbering Control"

SP-10.2.4.8, "Safety System Walkdowns"

STD-10011, "Drawing Requirements Standards"

TEM-10400-1, Technical and Functional Requirements"

9. APPENDIXES

Appendix A, Structures, Systems and Topics for ATR DBRP

Appendix B, Schedule for the ATR DBRP

Appendix A

Structures, Systems and Topics for ATR DBRP

Structures and Systems[b]:

Document Number	System Name
TFR-7.6.16	Control Complex—RDAS, LPCIS, Water Power Calculator
TFR-7.6.25	Control Complex—DCS
TFR-7.6.1	Control Complex—LCRM, Log-N, Neutron Level Channel 8
TFR-7.6.20	Control Complex—N-16
TFR-7.6.24	Control Complex—Control Room Upright, Annun./SER, CRC/CDS
TFR-7.6.13	Control Complex—Control Power Reduction
TFR-7.6.12	Control Complex—Quadrant/Core Differential Pressure
TFR-8.14	Deep Well/Raw Water System
TFR-7.3	Electric Power Distribution[c]
TFR-7.7.1	Emergency Firewater Injection System
TFR-8.4	Firewater Supply
TFR-7.4.5	Low-Pressure Demineralized Water System
TFR-7.8.9	Fuel Storage and Handling Equipment
TFR-7.9	Pressurized Water Experiment Facilities
TFR-7.4.1	Primary Coolant System
TFR-7.7.4	Radiation Monitoring and Seal System
TFR-7.0	Building and Miscellaneous Structures
TFR-7.8.4	Radiation Monitoring System
TFR-7.2.2	Reactivity Control/Safety Rods
TFR-7.2	Reactor Core Internals
TFR-7.2.1	Fuel Elements
TFR-7.7	Plant Protection System
TFR-7.8.1	Heating and Ventilation System

b. Exact titles and system names will be determined during the preparation of the TFR.

c. This TFR will include the electrical distribution SSC under number 7.3 in SP-10.2.2.7, "SDD and Engineering Change Form (ECF)/Facility Change Form (FCF) Numbering Control."

Design Topics:

Document Number	Topic
EDF-7258	Facility Fire Protection
EDF-7259	Facility Single Failure and Separation

Appendix B

Schedule for the ATR DBRP

A Subcontractor has been obtained to execute the assessment phase of the ATR DBRP. In order to execute the assessment phase of the ATR DBRP, the Subcontractor has furnished an experienced engineering team. The schedule for the ATR DBRP has been developed by the Subcontractor as required by the Statement of Work for the Advanced Test Reactor Design Basis Reconstitution Program Assessment Phase (SOW-3049). The level 2 version of the schedule is included in this Appendix.

1. INTRODUCTION

The ATR is a DOE-owned pressurized-water nuclear reactor whose principal function is to provide a high neutron flux for experiments involving reactor fuels and materials. The reactor has a design thermal power of 250 MW, a nominal operating pressure of 360 psig at the core inlet (top of core), and a nominal core inlet temperature of 125°F. The nominal core outlet temperature is 170°F at the design thermal power level. The ATR and its support facilities are located at the Reactor Technology Complex (RTC) of the INL. Operation and maintenance of the ATR is the responsibility of the ATR Programs Organization of the INL prime contractor.

The ATR was designed for the irradiation of experiments. Many different experiment programs have been and continue to be conducted at the facility. New experiment programs are actively sought through new business initiatives. Experiments irradiated in ATR have played a vital role in the development of naval reactors and are expected to play an important role in the development of future reactor designs.

The ATR was designed in the late 1950s. Construction began in November 1961. Nuclear criticality was achieved in July 1967. Full power was achieved in August 1969. Operation with inpile experiments began in December 1969.

The original safety basis was documented in a Safety Analysis Report (SAR) for the ATR dated April 1965 (deBoisblanc and Cohen 1965). The ATR Plant Protection System (PPS) and Technical Specifications Design Basis Report (DBR) dated May 1976 (Atkinson and Hanson 1976) was prepared to support design of an upgraded PPS and development of technical specifications. The PPS includes the reactor shutdown system and the engineered safety features that were part of the facility at the time the DBR was prepared. The DBR contained analyses of accident sequences from which the performance requirements (setpoints and response times) for the PPS and technical specifications for initial conditions (pressure, temperature, flow, power) were derived. The DBR served as the facility accident analyses from 1976 until SAR-153, "Upgraded Final Safety Analysis for the Advanced Test Reactor," was implemented in 1998. The DBR was maintained as a configuration controlled document with periodic updates. SAR-153 was prepared in response to requirements in DOE Orders (DOE 1992) and now Title 10 of Code of Federal Regulations (CFR), Part 830, *Nuclear Safety Management* (CFR 2002) for upgrading and maintaining a DSA describing the facility safety basis. SAR-153 development did not include a design basis reconstitution effort. Rather, SAR-153 built on the DBR and referred to the 1965 SAR. SAR-153 has been maintained via the annual update process as required by DOE regulations. The purpose of the design basis reconstitution program is to update and bring the ATR design basis to a level comparable to contemporary commercial nuclear power plants.

2. ASSESSMENT OF NEED

The plant protection criteria that define accident consequence limits for the safety analysis have changed since the original facility design and analysis. This history and progression of facility modifications and the facility SAR result in a safety basis that has potential for discrepancies between the facility and the safety basis and inconsistent approaches to accident analyses.

Design codes and standards have evolved significantly over the last 40+ years since the ATR was designed. Partial efforts to demonstrate facility safety by comparison to modern design codes and standards and the lack of a definitive backfit policy within DOE, have resulted in a piecemeal application of new codes and standards to portions of the ATR facility.

DOE Order 420.1B, "Facility Safety," (DOE 2005) requires that documents that define the system design basis and supporting design information documents shall be compiled and kept current using a formal change control/work control program. When the design basis is not clearly defined, DOE Order 420.1B allows identification of system requirements and performance criteria essential to the system's performance of its safety function, the basis for the requirements, and how the current system configuration satisfies the requirements and criteria. This latter approach will be used for ATR DBRP. Additionally, INL management control procedure (MCP)-3767, "Configuration Management and Design Recovery Planning," requires establishing controlled technical baseline documentation.

A DBRP for the ATR is necessary to develop an updated baseline of design basis documentation. The DBRP will focus on identification of system requirements and performance criteria essential to the system's performance of its safety function, the basis for the requirements, and how the current system configuration satisfies the functional requirements and criteria. In addition to establishing the baseline documentation important to the system's or structure's safety function, the functionality of the structures and systems needs to be defined and validated. The validation of safety system functionality is not addressed in INL procedures, but it is a vital part of the ATR DBRP. The importance of the functionality validation is documented in ATR 2004, DOE 2003a, and DNFSB 2000.

This plan describes the DBRP for ATR. The development of this plan follows INL MCP-3767. Design basis reconstitution guidance from the International Atomic Energy Agency (IAEA) published in IAEA-TECDOC-1335, "Configuration Management in Nuclear Power Plants," (IAEA 2003) has been used as recommended in DOE-standard (STD)-1073-03, "Configuration Management," (DOE 2003b). The design basis reconstitution guidance in the 1993 revision of DOE- STD-1073, "Guide for Operational Configuration Management Program (Including adjunct Programs of Design Reconstitution and Material Condition and Aging Management)," (DOE-1993) was also used as a reference. This earlier version of the 1073 standard is consistent with the 2003 revision but has some additional detail that was useful in the development of this plan. Nuclear Energy Institute (NEI) 97-04, "Design Bases Program Guidelines," (NEI 2001) was also used as a reference in the development of this plan. The NEI 97-04 guidance is used in the commercial nuclear power industry, and portions of NEI 97-04 have been endorsed by the Nuclear Regulatory Commission (NRC). The DBRP includes an assessment phase and a design recovery phase. The design recovery phase will be based on the results of the assessment phase. The plan defines a process for evaluating *DBRP observations* (see def.).

Revision 0 of this plan was developed prior to the start of the assessment phase of the ATR DBRP. Revision 1 included a pilot execution of the DBRP assessment phase for two systems. Revision 2 incorporated lessons learned from execution of the pilot of the assessment phase of the program. Revision 3 adjusts the ATR DBRP assessment phase schedule for the impacts resulting from the interruption of DBRP activities to support restart of the ATR after the 2004 core internals change out outage which included extensive activities for resolving issues identified during the DBRP assessment pilot to the extent necessary to support resumption of the ATR test program. Revision 3 also incorporates input from an external assessment of the ATR DBRP completed after the execution of the pilot program (Areva 2005), a DOE oversight report on the ATR DBRP (DOE 2005), and a request from DOE to provide a schedule and cost to accelerate the ATR DBRP (Thompson 2005, Sehlke 2005). Revision 3 also adds the initial program plan for the Configuration Management and Design Recovery phase of the DBRP. Revision 4 modified the plan to reflect the change to subcontract execution of the DBRP assessment phase. Revision 5 updates the plan consistent with the scope of work in the DBRP assessment phase subcontract and the lessons learned in the initial subcontract tasks. Revision 6 updates the plan to incorporate changes in INL procedures. Specifically, Technical and Functional Requirements (TFRs) documents will be the output produced by the ATR DBRP assessment phase instead of System Design Descriptions (SDDs).

This history of design development, modifications and plant operations forms the basis of need that led to the decision by ATR Programs management to develop and execute a DBRP for the ATR. These issues are not unlike issues identified in the commercial nuclear power industry during safety-system functionality inspections and safety-system outage modification inspections. These findings led the industry to complete design basis reconstitution programs (Imbro 1991) in the late 1980s and again in the mid-1990s.

3. SCOPE

MCP-3767 provides guidance for assessing the level of rigor to be applied in the reconstruction of the *design basis* (see def.) and supporting design information. The guidance is based on the remaining facility lifetime, the facility life-cycle phase, and the facility hazard category. The ATR, being a nuclear hazard Category 1 facility in the operational life-cycle phase with more than 10 years of remaining lifetime, requires full baseline reconstitution based on the criteria in MCP-3767. This plan is consistent with a full reconstitution of the design basis and supporting design information baseline for ATR.

The DBRP is designed to establish and document the ties between the SAR, design basis, and actual system configurations. Figure 1 shows the three major elements of a comprehensive DBRP and the relationships between the design requirements, the actual plant configuration, and the SAR.

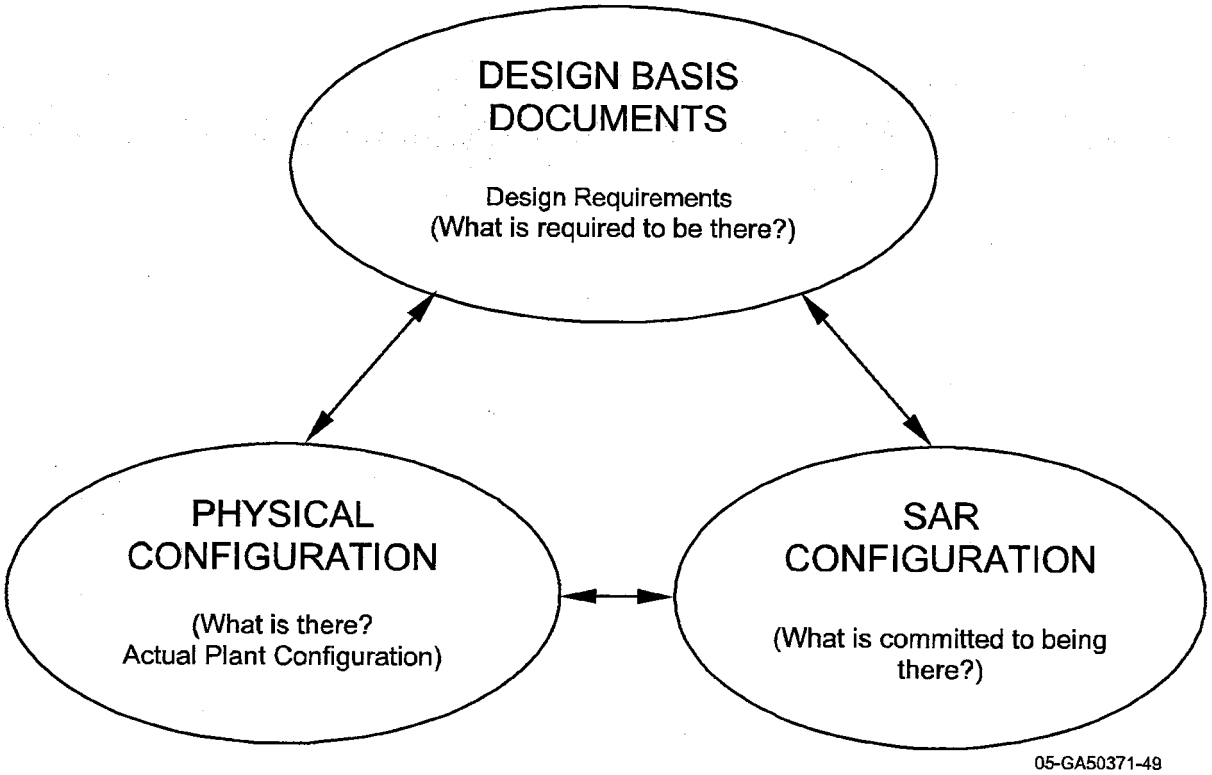

Figure 1. Relationship between SAR, DBDs and plant's physical configuration.

The ATR DBRP will focus on identification of system requirements and performance criteria essential to the system's or structure's performance of its safety function, the basis for the requirements, and how the current system configuration satisfies the requirements and criteria. The design basis and supporting design information will be assessed on a structure or system level. Specification of the design basis and supporting design information at the structure or system level provides an adequate level of detail to establish functionality requirements and provides an adequate foundation for future engineering activities for specification of components and substructures. The ATR DBRP will consider each of the safety-related structures and systems defined in SAR-153. Selected important-to-safety structures and systems will also be considered. The specific structures and systems and design topics that will be within the scope of the ATR DBRP are listed in Appendix A, Structures and Systems for ATR DBRP. Some systems have been grouped based on their inter-relationship or similar function.

The ATR DBRP will be conducted in an assessment phase and a design basis recovery phase. Where the DBRP assessment phase cannot establish the link shown in Figure 1, a *confirmed gap* (see def.) will be identified. The confirmed gaps represent configuration management and design recovery actions. The process for reporting and addressing DBRP observations is shown in Section 4.4 of the Plan.

The link between the engineering design documents, the safety basis, and the physical configuration will be established in Technical and Functional Requirements (TFR) documents. TEM-10400-1, "Template for Technical and Functional Requirements," provides guidance for format and content of TFRs. TEM-10400-1 is based on the content and format guidance in DOE-STD-3024-98 (DOE 1998). It is beyond the scope of the DBRP to create a full complement of TFRs. The DBRP will, however, capture the design basis and supporting design information that is critical to support safe operation of the facility. This information will be captured in TFRs, walk-down reports, and the results of safety system validation. The walk-down reports and results of safety system validation items—which are separate from the TFRs developed by the DBRP Assessment Phase—will provide information on "how" the system design requirements are satisfied.

The functionality of the safety structures and systems will be validated in a technical report supplementing the TFR. Validation involves a detailed review of system and structure vendor data, maintenance procedures, and testing procedures relative to the defined safety function. These are the data relied upon to demonstrate the system or structure functionality. This approach will not involve disassembly of equipment.

Industry experience and industry consultants will be used throughout the DBRP process. The DBRP budget provides for use of outside consultants to execute the DBRP assessment phase. Outside support will be procured in accordance with INL service procurement procedures with defined deliverable documentation that will be integrated into the final records for the ATR DBRP (DOE 2005). The details of the elements of the DBRP are described in the next section of this plan.

4. METHODOLOGY

The following subsections provide details of each element of the ATR DBRP. Each element is described separately; however, it is obvious that the execution cannot draw such distinct lines between the elements.

4.1 Configuration Management System

The INL has a CMS. The facility and document change portions of this system are in use at the ATR. However, a baseline design basis has not been clearly defined and documented. Baseline definition is the foundation of a sound CMS. A configuration management database is provided within the INL CMS for definition of the baseline; however, this database has not been populated with design basis documentation and supporting design information.

The companywide CMS documents include the following program requirements documents (PRDs), STDs, and MCPs:

- LRD-10501, "Configuration Management Requirements"
- PDD-10502, "Configuration Management Program"
- STD-10011, "Drawing Requirements Standard"
- LWP-10400, "Design Control"
- TEM-10400-1, "Technical and Functional Requirements"
- LWP-7203, "Vendor Data Process"
- MCP-3767, "Configuration Management and Design Recovery Planning."

The ATR DBRP will make use of the defined INL CMS and the related procedures.

4.2 Assessment Phase

4.2.1 System Boundary Definition

This element of the ATR DBRP assessment phase will define physical boundaries for the systems and structures listed in Appendix A in order to ensure that the ATR DBRP is thorough and complete.

4.2.2 Identification of Design Basis Requirements

This element of the ATR DBRP assessment phase will involve defining the system design basis requirements and performance criteria essential to safety, based on the SAR, TSR, and related design basis information such as engineering design files (EDFs). The identification of system requirements and performance criteria essential to the system's or structure's performance of its safety function will involve document searches and reviews. The search will begin with the ATR SAR (SAR-153); however, the SAR by itself does not contain sufficient detail to establish the design basis. Review and evaluation of the SAR reference documents and other engineering documents is necessary. Engineering documents (e.g., EDFs, SDDs, modifications files, specifications, and project files) will be searched for applicable requirements. The system modification history will be compiled and included as an appendix to the TFR. Most SAR references and many other engineering documents are available in the RTC Nuclear Engineering Library, the INL electronic document management system (EDMS), and RTC document control files. There are some legacy files from retired engineering staff that have been kept for reference purposes. These will be reviewed for applicable source documents. Any design basis documents identified by the ATR DBRP that are not in the INL EDMS will be input into the INL EDMS to provide for future retrievability.

A process for logging and tracking document reviews will be established. The process will capture the document information (i.e., document identifier, author, title), system association, review status reviewer, and conclusions of the review.

Interviews will be conducted with designated system engineers and experienced operations and maintenance personnel to establish the design basis and supporting design information used by the field engineering organization. The design basis and relevant supporting design information collected during this element of the DBRP will be documented in the TFR to provide for future retrieval.

4.2.3 Safety System Functional Validation

This element of the ATR DBRP assessment phase will validate functionality relative to the design basis and relevant supporting design information established per Section 4.2.2. The validation of system functionality will confirm the SSC functional requirements are implemented in the plant. Vendor data, system functionality testing procedures, and applicable maintenance procedures will be reviewed to determine that the structure or system can perform the safety function within the assumed values.

4.2.3.1 Functional Validation Walk-Downs

This element of the ATR DBRP will involve physical walk-downs where and when it is necessary to validate the SSC design basis requirements necessary to support functional validation. Walk-downs will typically involve facility operations and system engineering staff as well as DBRP project personnel.

DBRP observations identified during the walk-downs will be evaluated using the process described in Section 4.4. Physical discrepancies that do not represent confirmed gaps will be documented and entered into the Issue Communication and Resolution Environment (ICARE) system for formal tracking and corrective action planning (LWP-13840, "Corrective Action System").

Confirmed gaps identified during the performance of the safety system functional validation may be an indication that the system or structure functionality is not consistent with the ATR safety basis. Confirmed gaps will be entered into the DBRP gap database and evaluated for safety significance. Confirmed gaps that indicate a potential inadequacy in the ATR safety basis will be evaluated using company procedure LWP-18001, "Unreviewed Safety Questions," and the direction in LO-RTC/SMC-06-011 (Sellers 2006).

4.2.4 Generation of TFRs

The design basis documents and supporting design information collected during the DBRP will form the basis for generating TFRs. Actual content of each TFR will depend on the specifics of the structure or system. TFRs will be issued through the INL document control process.

Once completed it is important that the TFRs be maintained current. The facility engineering change process (LWP-10400) and the RTC safety basis update implement process (FRM-411, "INL Nuclear Operations Standard Safety Basis Implementation Checklist") define the processes that will maintain the TFRs (DOE 2005).

4.3 ATR Accident Analysis Verification

The ATR DBRP has completed a review of SAR-153 for compliance with regulatory requirements and requirements from departmental orders (McCracken 2004). This review concluded that SAR-153 is in compliance with these basic regulatory requirements.

As the DBRP progresses through the identified safety systems, the related SAR analyses will be reviewed to provide reasonable assurance that the SAR addresses all design basis accidents, the analyzed accident sequences are completely defined and accurately analyzed, and that computer codes used in the analysis of the design basis accidents have verification and validation documentation[a] for the safety basis application. The system modeling, analytical correlations and assumptions, input data, and so forth, are accurate and appropriate for the physical phenomenon expected to be encountered as the scenario unfolds and are consistent with safety system functionality. Analyses will be reviewed to verify that they have been carried out far enough in time to ensure that the plant is stable with a long-term source of heat removal and make-up coolant. These reviews will be done using a graded approach that focuses on scenarios that set operational limits and safety system functional requirements.

Confirmed gaps identified during this phase will be entered into the DBRP gap database and evaluated for safety significance. Confirmed gaps that indicate a potential inadequacy in the ATR safety basis will be evaluated using company procedure LWP-18001 and the direction in LO-RTC/SMC-06-011 (Sellers 2006).

---

a. INL procedures for analyses and analysis software control are provided in LWP-10200, "Calculations and Analysis" and MCP-3039, "Analysis Software Control." The development of SAR-153 predated these procedures. Comparison of the SAR-153 software validation and verification against the essential elements of these current procedures will provide a basis for this evaluation.

4.4 ATR DBRP Issue Reporting and Resolution

This element of the ATR DBRP involves reporting and planning for resolution of confirmed gaps identified during the ATR DBRP. The process is shown schematically in Figure 2.

4.4.1 ATR DBRP Issue Reporting

A DBRP Gap Database has been developed to facilitate the collection, assessment, and reporting of issues identified by the ATR DBRP. A database record is generated for each confirmed gap. The record includes a gap identification number of the form GAP-XXX-YY, where XXX is a sequential number and YY is the calendar year of identification. The XXX counter is reset to 000 at the beginning of each calendar year. The gap database also includes the date of discovery, gap name, gap description, gap evaluation, references to applicable USQ documentation, links to pertinent documents in EDMS, information on any corrective actions taken prior to entry of the gap into the Issue Communication and Resolution Environment (ICARE), and a cross reference to the ICARE system number. The DBRP gap database was designed as a project tool. Formal tracking of corrective action planning will be in the ICARE system (LWP-13840).

The gap description is written to provide sufficient detail for review and evaluation of the gap. The confirmed gap evaluation provides additional detail and considers the safety significance of the gap. The confirmed gap evaluation also documents the basis for whether or not a Potentially Inadequate Safety Analysis (PISA) assessment was completed per LWP-18001.

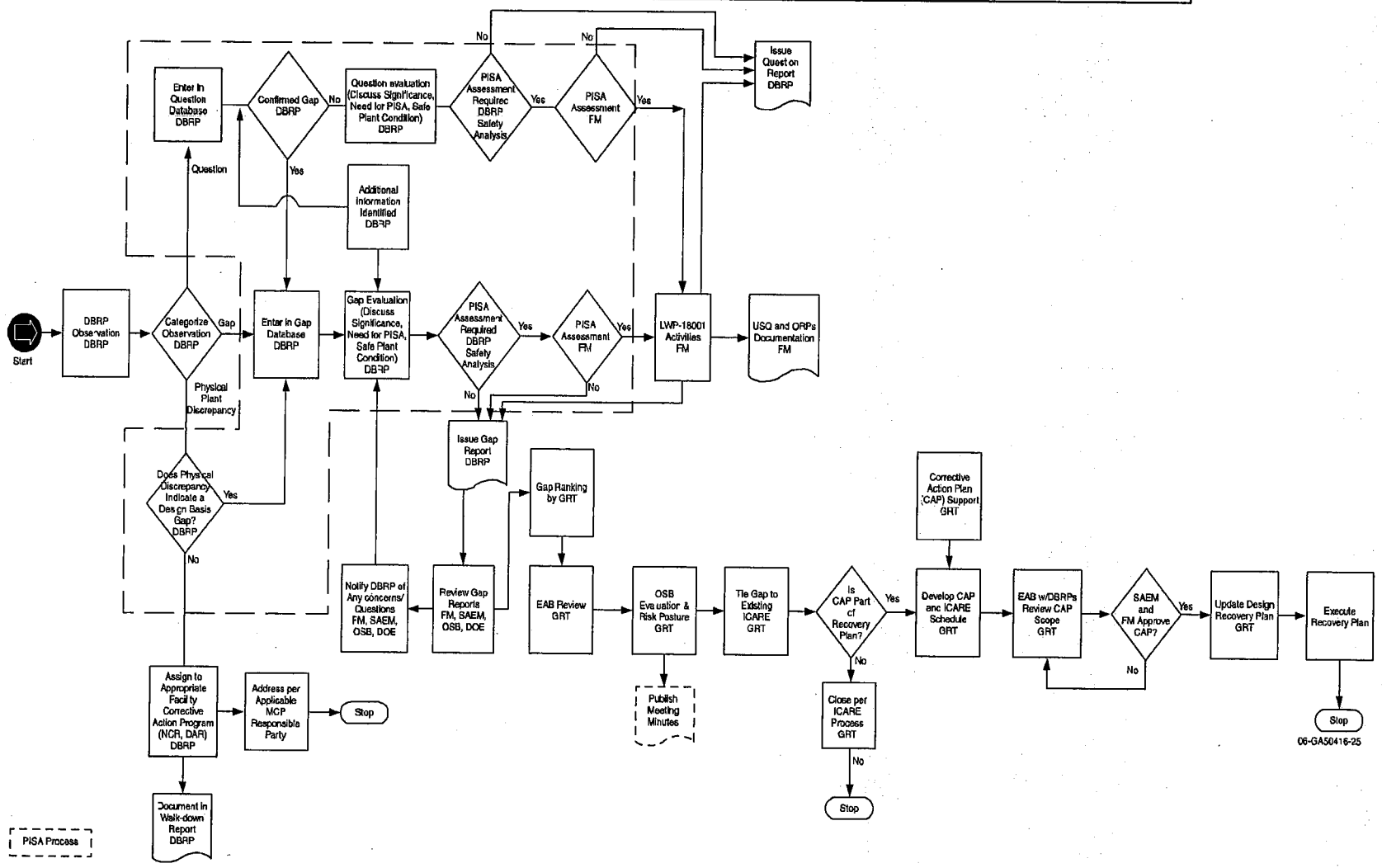

Figure 2. Design basis reconstitution issue resolution process.

INTENTIONALLY BLANK

REVISION LOG

Rev.	Date	Affected Pages	Revision Description
0	09/07/99	All	See DAR 40601.
1	02/26/04	All	See DAR 108952.
2	09/30/04	All	See DAR 115529.
3	07/21/05	All	See DAR 500814.
4	09/28/05	All	See DAR 502349.
5	10/26/06	All	See DAR 508010.
6	12/06/07	All	See eCR 553714.

INTENTIONALLY BLANK

SUMMARY

Complete, accurate, and retrievable *design basis* (see def.) and *supporting design information* (see def.) documentation is required by Department of Energy (DOE) Orders and is necessary to support various facility activities, including design control and configuration management. Clearly defined and controlled design basis and supporting design information provide the necessary baseline against which proposed facility modifications and experiments can be evaluated. In addition, the design basis and supporting design information are necessary to support:

- Operability evaluations
- Unreviewed safety question (USQ) determinations
- Facility transient evaluations
- Documented safety analysis report (DSA) and technical safety requirement (TSR) revisions
- Facility engineering activities
- Improvements in facility operability and performance.

A clearly defined and controlled design basis and supporting design information baseline does not exist to the level desired at the Advanced Test Reactor (ATR). A Design Basis Reconstitution Program (DBRP) is necessary to develop the baseline of design basis and supporting design information documentation for the ATR. In addition to the reconstitution of the design basis and supporting design information, the functionality of the safety structures and systems must be validated. The *validation* (see def.) of safety system functionality is not addressed in Idaho National Laboratory (INL) procedure for configuration management and design basis recovery but it is a vital part of the ATR DBRP. The ATR DBRP is described in this plan.

The plan is based on DOE guidance and guidance from similar programs at commercial nuclear power plants. The ATR DBRP has been developed using a graded approach that will focus on identification of system requirements and performance criteria essential to the system's performance of its safety function, the basis for the requirements, and how the current system configuration satisfies these requirements and criteria. The DBRP includes an assessment phase and a design basis recovery phase.

INTENTIONALLY BLANK

CONTENTS

SUMMARY v

ACRONYMS ix

1. INTRODUCTION 1

2. ASSESSMENT OF NEED 2

3. SCOPE 4

4. METHODOLOGY 6

4.1 Configuration Management System 6

4.2 Assessment Phase 7

4.2.1 System Boundary Definition 7
4.2.2 Identification of Design Basis Requirements 7
4.2.3 Safety System Functional Validation 7
4.2.4 Generation of TFRs 8

4.3 ATR Accident Analysis Verification 8

4.4 ATR DBRP Issue Reporting and Resolution 9

4.4.1 ATR DBRP Issue Reporting 9
4.4.2 ATR Configuration Management and Design Recovery Planning 11

5. USE OF INDUSTRY EXPERIENCE 12

6. ORGANIZATIONAL RESPONSIBILITIES AND INTERFACES 13

7. DEFINITIONS 14

8. REFERENCES 15

9. APPENDIXES 17

Appendix A. Structures, Systems and Topics for ATR DBRP 18

Appendix B. Schedule for the ATR DBRP 20

FIGURES

1. Relationship between SAR, DBDs and plant's physical configuration. 4
2. Design basis reconstitution issue resolution process. 10

INTENTIONALLY BLANK

ACRONYMS

ATR	Advanced Test Reactor
CFR	Code of Federal Regulations
CFRD	corporate funded research and development
CMS	Configuration Management System
DBR	Design Basis Report
DBRP	Design Basis Reconstitution Program
DOE	Department of Energy
DSA	documented safety analysis
ECF	Engineering Change Form
EDF	engineering design file
EDMS	Electronic Document Management System
EFIS	Emergency Firewater Injection System
FCF	Facility Change Form
FM	Facility Manager
IAEA	International Atomic Energy Agency
ICARE	Issue Communication and Resolution Environment
INL	Idaho National Laboratory
LEP	Life Extension Project
LDW	low-pressure demineralized water
LOCA	loss-of-coolant accident
MCP	management control procedure
NEI	Nuclear Energy Institute
NRC	Nuclear Regulatory Commission
OSB	Operational Safety Board

PISA	Potentially Inadequate Safety Analysis
PCS	Primary Coolant System
PPS	Plant Protection System
PRD	program requirements document
RSS	Reactor Shutdown System
RTC	Reactor Technology Complex
SAR	safety analysis report
SDD	system design description
SSC	structures, systems, and components
STD	standard
TFR	Technical and Functional Requirements
TRA	Test Reactor Area
TSR	technical safety requirement
USQ	unreviewed safety question