87th Congress
1st Session

JOINT COMMITTEE PRINT

SL-1 ACCIDENT

ATOMIC ENERGY COMMISSION INVESTIGATION BOARD REPORT

JOINT COMMITTEE ON ATOMIC ENERGY
CONGRESS OF THE UNITED STATES

JUNE 1961

Printed for the use of the Joint Committee on Atomic Energy

U.S. GOVERNMENT PRINTING OFFICE
70593 O WASHINGTON : 1961

For sale by the Superintendent of Documents, U.S. Government Printing Office
Washington 25, D.C. - Price 55 cents

JOINT COMMITTEE ON ATOMIC ENERGY

CHET HOLIFIELD, California, *Chairman*
JOHN O. PASTORE, Rhode Island, *Vice Chairman*

MELVIN PRICE, Illinois
WAYNE N. ASPINALL, Colorado
ALBERT THOMAS, Texas
THOMAS G. MORRIS, New Mexico
JAMES E. VAN ZANDT, Pennsylvania
CRAIG HOSMER, California
WILLIAM H. BATES, Massachusetts
JACK WESTLAND, Washington

RICHARD B. RUSSELL, Georgia
CLINTON P. ANDERSON, New Mexico
ALBERT GORE, Tennessee
HENRY M. JACKSON, Washington
BOURKE B. HICKENLOOPER, Iowa
HENRY DWORSHAK, Idaho
GEORGE D. AIKEN, Vermont
WALLACE F. BENNETT, Utah

JAMES T. RAMEY, *Executive Director*
JOHN T. CONWAY, *Assistant Director*
EDWARD J. BAUSER, *Technical Adviser*

FOREWORD

On January 3, 1961, an accident, fatal to three persons, occurred at the SL–1 reactor, National Reactor Testing Station in Idaho. This was the first fatal power reactor accident in the United States.

The day following the accident, a special board was convened by the General Manager of the Atomic Energy Commission to investigate and report on the accident. This print contains the report of that board and related correspondence.

The Joint Committee has prepared this document as a preprint for the forthcoming hearings on "Radiation Safety and Regulation" to be held by the committee between June 12–15, 1961. The committee has withheld a hearing on this accident until the Commission had an opportunity to fully investigate and make its report.

It is my hope that in the course of these hearings, now almost 6 months removed from the date of the incident, the committee may be able to objectively evaluate all the information gathered in the interim and extract those lessons which may be learned from this unfortunate occurrence so that similar tragedy may be avoided in the future.

CHET HOLIFIELD,
Chairman, Joint Committee on Atomic Energy.

LETTER OF TRANSMITTAL

U.S. ATOMIC ENERGY COMMISSION,
Washington, D.C., June 5, 1961.

Hon. CHET HOLIFIELD,
Chairman, Joint Committee on Atomic Energy,
Congress of the United States.

DEAR MR. HOLIFIELD: I am submitting herewith the SL–1 Investigation Board's report, copies of which were provided to the Joint Committee staff a few days ago on an informal basis. We had planned to release this report in conjunction with a statement by the Commission on the SL–1 incident. However, the latter document is not yet in final form and in view of your preparations for the forthcoming hearings on "Radiation Safety and Regulation," the Commission believes it will be useful for you to have the Board's report in advance of the Commission's statement. I am also enclosing a copy of a memorandum to me from Mr. Curtis Nelson, Chairman of the Investigation Board, in which he makes some additional comments regarding possible causes of and responsibility for the incident.

The Investigation Board report represents the judgment of the Board. The Commission's statement reflecting its own views regarding the circumstances surrounding the SL–1 incident will be available by the time your hearings begin on June 12.

Sincerely yours,

A. R. LUEDECKE,
General Manager.

MAY 10, 1961.

To: A. R. Luedecke, General Manager.
From: Curtis A. Nelson, Chairman, SL–1 Board of Investigation.
Subject: Report of the Board of Investigation.

We are transmitting the enclosed report of the Board, based on information received through May 1, 1961. It appears appropriate to report at this time, in that further significant information must come from the reactor itself and will be received only after the difficult disassembly operation.

We wish to respond to your desires for prompt and complete information concerning the SL–1 incident within the limitations of present knowledge. We cannot say, however, with any certainty, what initiated the SL–1 explosion, and it is possible that we may never know. It is also possible, although it seems unlikely, that there will be discovered evidence of a cause not yet considered.

Although we cannot assign the cause or the responsibility for the explosion to any known or unknown act or condition preceding the incident, it is the judgment of the Board that, before the incident occurred, the condition of the reactor core and the reactor control system had deteriorated to such an extent that a prudent operator

would not have allowed operation of the reactor to continue without a thorough analysis and review, and subsequent appropriate corrective action, with respect to the possible consequences or hazards resulting from the known deficiencies. We believe that such review and action should have resulted in modifications to design, administration, and operation sufficient to insure that there was no potential hazard greater than contemplated in the original hazards report and review, before reactor operation was resumed.

The rest of our present discussion is in the light of this judgment.

1. Cause of the incident

We do not rule out the possibility of a nonnuclear event which subsequently caused a nuclear excursion although no evidence to support such a hypothesis has been discovered. Postulation that a nuclear excursion initiated the explosion appears more credible, and it is not inconsistent with the available evidence. The postulation of any other mechanism, including hydrogen explosion, sabotage, or anything else, is not supported by any known evidence, and would appear to have been an unlikely coincidence with the operation in progress, in any event.

In relating the condition of the reactor to the cause of the incident, a major consideration is that a nuclear excursion of the magnitude indicated could not have occurred without a change in reactivity of about 1 or 2 percent, at a rate of 2 to 4 percent per second after having achieved delayed criticality Even if the shutdown margin of reactivity had been zero, at the time the incident occurred, it appears that such a change of reactivity could have occurred only as the result of some abrupt structural failure in the reactor, or by an unusual movement of the central control rod. It seems extremely improbable that the required motion of the central control rod (a distance greater than approximately 20 inches, and at rate close to the maximum humanly possible, under the circumstances) could have occurred accidently, unless the rod had been stuck in the shroud and became free while one or more operators were exerting a large upward force on it. While there is no direct evidence that this occurred, the necessary conditions and actions appear, at the present time, to be less implausible than those required for any other hypothesis that has been suggested.

To a large extent the plausibility of the suggested hypothesis depends upon the extent to which there is evidence of sticking of control rods, particularly the central rod, within the shrouds. We note that there were a large number of occasions on which control blades did not move freely either in or out. We have heard testimony that the central rod never gave trouble (although there is at least one recorded case, shortly before the incident, when the central rod did not fall freely when called upon to scram). We also have heard testimony predominantly to the effect that sticking of control rods was due to malfunction of the seals. A chief operator, with a mechanics speciality, testified that he believed that clearances in the shroud had decreased—causing sticking of the blades in the shrouds (his observations were backed up primarily by the experience he had with the dummy aluminum control rod that was inserted successfully in shroud No. 4 only after several inches had been cut off the bottom of the blade).

Whether or not the incident was initiated by an operator trying to withdraw the central rod, while stuck in the shroud, the hypothesis is useful in discussing the relationships among the various factors which could have, but may not have, contributed to the accident.

(*a*) *Reactivity gain from loss of boron.*—As indicated above, a large increase in reactivity above delayed criticality, in a short time, would have been required to produce the indicated nuclear incident. If there had been a larger shutdown margin of reactivity (less mechanical loss of boron), the total distance through which the central control rod would have had to be moved would be correspondingly greater. It is conceivable that the actual rod displacement would have been inadequate in magnitude or rate to produce the excursion, under these conditions.

(*b*) *Sticking of control rods.*—The emphasis in the testimony of difficulty with rod sticking only because of seal difficulties would seem to argue that rod sticking was unrelated to the hypothesis under discussion. It is not unlikely, however, that if the rods were beginning to stick in the shrouds immediately before the shutdown on December 23, 1960, the fact that sticking because of seal difficulties was an old and familiar problem might have been responsible for failure to recognize this later development or to bring it to the attention of higher supervision.

(*c*) *Bowing of boron strips.*—It was well known that the boron strips bowed excessively between tack welds along the outside surfaces of the fuel elements. It was also well known that it was extremely difficult to remove, manually, the central fuel elements. It appears not unlikely that the bowing of the strips caused lateral pressure to be exerted on the fuel elements, and consequently especially where full and half strips were both present, there may have been lateral pressure on the shrouds, which decreased the clearance between the control rod and the inner walls of the shroud.

(*d*) *Design and procedure.*—The hypothesized incident could not have occurred if the amount of withdrawal of the rate of withdrawal of the central control rod had been positively limited by mechanical restraint or by operational procedure.

(*e*) *Administrative controls and technical review independent of the operational organization.*—The following observations are made, again in relation to the hypothesized incident, as factors which could have contributed to the incident:

(1) Routine technical audit, by persons independent of the operating organization, of routine operations might have led to a more conservative course of action, with detailed knowledge of the nature, extent, and possible implications of the several known deficiencies.

(2) A specific procedure for the actual operation of assembly and disassembly of the control rod drives, containing clear warning and explanation of the possible hazard associated with lifting the rod (rather than only the mechanical steps contained in the training procedure), might have reduced the magnitude or rate of displacement of the central rod during reassembly sufficiently to prevent the occurrence of the incident.

(3) If manipulation of the control rods, during assembly and dissembly, with the reactor shutdown, had not been considered a routine job, even though it involved a substantial movement

of the control blades with respect to the core, added supervision might have been present and, conceivably, could have influenced the course of events in such a way as to prevent the incident.

(4) If nuclear instrumentation were left on at all times, and if audible response was present in the reactor room during the rod reassembly, it is conceivable that indications of increasing reactivity and power level might have been recognized in time to prevent the incident, by limitation of the rate or magnitude of the displacement of the central rod.

(5) Had an operator been present in the control room, and observing the nuclear instrumentation, it is conceivable that indications of reactivity or power level increase during manipulation of the control rods during assembly and disassembly would have been such that he could have advised those in the reactor room of abnormal response, thereby preventing inappropriate displacement of the central control rod.

(6) The formal recommendation of a report on the loss of boron from the reactor core, after intensive review of the problem, was to terminate a previously established inspection routine of the fuel elements and to continue to operate the reactor. It is conceivable that continued inspection of the fuel elements could have led to additional knowledge which would have affected the decision to continue to operate, and if the report had recommended no further operation, the accident would have been prevented.

(7) The training and ability of the operating organization appears not to have been entirely adequate, since substandard conditions were allowed to develop in the reactor and its components and yet, reactor operation was allowed to continue. The complexity of the chain of command for the SL–1 may explain, in part, the lack of effectiveness of the existing organization in communicating with higher levels of supervision regarding these substandard conditions. For example, the role of the military cadre was limited, in operation of the plant, in that the cadre, while adequately trained to perform the routine shift duties involved in operating the reactor, was not, by itself, trained in reactor physics and nuclear safety to the high level of experience and ability normally associated with a reactor plant operating force. It is conceivable that since the high level supervision was supplied by a different part of the operating organization (the contractor's personnel) that circumstances developed where both parts together were less effective than a single organization would have been, and that as a result, insufficient knowledge of one kind or another was transmitted to appropriate personnel.

2. Responsibility for the incident

Knowledge of all of the factors listed above existed within the contractor's organization and within the operating arm of the AEC. If the explosion occurred as a result of the hypothesized incident, responsibility cannot be limited to any one person or group of persons.

The immediate responsibility for the SL–1 incident, still in the light of the foregoing discussion, was that of the contractor, in that the contractor was on-site and had immediate responsibility for all reactor operations. (We specifically absolve the military cadre, as such, from any responsibility. Individuals of the cadre had responsibility,

within the limited role played by the cadre, insofar as they acted functionally as a part of the contractor's organization. There is no evidence, however, to show whether actions by individuals of the cadre were or were not related to the cause of the incident.)

Responsibility for the performance of the contractor is that of the contracting officer (and his organization) who administer the contract, i.e., the AEC Idaho Operations Office Manager and his staff. To the extent that the performance of the contractor was a factor contributing to the incident, the Operations Office Manager shares responsibility for the incident. Responsibility for appraising the performance of the contractor is assigned to the Operations Office by manual chapter 0701, and further delegated within the Operations Office by local issuances.

Responsibility for appraisal of the performance of the Idaho Operations Office, including functions assigned related to reactor safety, is that of the Division of Reactor Development. To the extent that the performance of the Operations Office may have been a factor contributing to the incident, the Director, Division of Reactor Development, shares responsibility for the incident.

Responsibility for ascertaining whether appropriate appraisals are being made by the headquarters divisions and operations offices is assigned to the Division of Inspection.

The Assistant General Manager for Research and Industrial Development is responsible for the performance of the operating divisions reporting to him, and finally the General Manager is responsible for the performance of the staff. (After the initial design review, the Licensing and Regulation Division and the Advisory Committee on Reactor Safeguards had no further assigned responsibility for review of this reactor. Under manual chapter 8401, the Operations Office did have a responsibility to get review from the Division of Licensing and Regulation if any significant change in design or operation took place. The operations office, in the latter half of 1960, did turn down a proposal to raise the operating power level from 3 MWT to 8.5 MWT on the basis that the increased power level would present an unacceptable hazard, in terms of radiation levels during routine operation, but did accept a proposal to operate at power levels up to 4.7 MWT, in that such operation did not constitute a significant change.)

There appears to have been some lack of clear definition of assignments, within the AEC, of responsibility for insuring continuing reactor safety appraisals and inspections, for insuring appropriate promulgation of written standards and policies, for providing adequate technical capabilities and for determining the requirements, including the most simple and direct organizational lines, for both routine and nonroutine communications. It is conceivable that clearer definition of these aspects of AEC staff responsibilities might also have prevented the SL–1 incident.

3. Corrective action to minimize or preclude similar incidents

The Board is convinced that there were a number of deficiencies related to the SL–1 reactor, which may or may not have had any relation to the direct cause of the incident, but correction of any one of which might actually have prevented its occurrence. We have discussed these in our report and in this transmittal letter. The

deficiencies or the measures taken to correct them may be classified as items of—

(*a*) Design, test, and operation.
(*b*) Organization, training, and administration.
(*c*) Procedures, policies, and standards.

We believe it would be inappropriate for the Board to make specific recommendations for AEC action on any of these individual items. Rather, we would suggest that appropriate action be planned by the staff of the General Manager and the staff of the Acting Director of Regulation to develop proposals for specific measures related to specific areas of the classifications listed.

The Board wishes to comment also on actions occurring after the SL–1 incident. We believe, first, that the performance of the contractor's organization during the initial recovery phase of operations was exemplary.

Second, we suggest that performance of the Board of Investigation, itself, might have been improved had its organization and assignment been specifically preestablished and described by appropriate AEC procedure.

Third, we suggest that the effectiveness of the Operations Office in conducting recovery and investigatory operations may have been impaired by the early presence of so many outside personnel. It is noted that within 24 hours of the incident there were present an AEC Commissioner, the General Manager, the Director of the Operating Division and several other members of the Division, the Board of Investigation and its consultants and advisers, representatives from several other AEC sites and several other Federal agencies, and the press.

Fourth, we suggest that the recovery operation and the investigatory actions might have been more effective, and more expeditiously carried out had the emergency planning been more extensive. As examples of what might have been improvements, we list the following:

(*a*) Appropriate choice and placement of suitable incident monitors (in addition to the one present) might have clearly indicated very soon after the incident the nature and extent of the incident.

(*b*) Clearly assigned, and continuing responsibilities of a "disaster team" might have improved the execution of early attempts to obtain significant data concerning short-lived activities of various samples.

We mention these examples not to criticize actions at SL–1, but to indicate the value of preplanning in understanding and coping with a similar incident in the future.

UNITED STATES ATOMIC ENERGY COMMISSION

SL-1 ACCIDENT

INVESTIGATION BOARD REPORT

REPORT ON THE

SL-1 INCIDENT, JANUARY 3, 1961

THE GENERAL MANAGER'S BOARD OF INVESTIGATION

Curtis A. Nelson, Chairman

Clifford K. Beck

Peter A. Morris

Donald I. Walker

Forrest Western

TABLE OF CONTENTS

	Page No.
1. Summary	1
2. Introduction	2
3. Administration of the Reactor Project	4
4. Operating History of the Reactor	15
5. Sequence of Events Surrounding the Incident	25
6. Consequences of the Incident	27
7. Possible Mechanisms for the Incident	34
8. Conclusions	36

ANNEXES

A. Teletypes Creating Board of Investigation	42
B. Witnesses Who Appeared Before Board	43
C. The Technical Advisory Committee	47
D. List of Observers	48
E. SL-1 Inspections and Visits	49
F. Contractual Arrangements and Agreements	54
G. Functions and Delegations	59
H. Chronology of Plant Operation	72
I. Organization Chart	91
J. Operating Log History of Control Rods	92
K. Malfunction Reports	97
L. Analysis Branch Report No. 3	103
M. Implications of an SL-1 Incident to Public in a Populated Area	109
N. Training Procedure - Control Rod Drives	115
O. Reactivity Changes and Nuclear Transients	132
P. Possible Reactivity Additions to SL-1 Reactor Since Construction	139
Q. Significance of Chemical Reactions in the SL-1 Incident	146
R. Interviews Concerning Chemical and Metallurgical Behavior of SL-1	148

FIGURES

1. Critical Rod Bank Position vs. Exposure - Equilibrium Xenon at 2.56 MWt	166
2. Indicated Rod Bank Position vs. Exposure - Various Operating Conditions	167
3. Control Rod Worth vs. Position	168
4. Photo - Top of Reactor Vessel after Incident	169
5. Drawing - Cutaway of SL-1 Plant	170
6. Photo - External of SL-1 Plant	171
7. Photo - Top of Core Before Incident	172
8. Photo - Top of Reactor After Incident	173

1. SUMMARY

A. Nature of Report

This report by the Board of Investigation is in response to the request of the General Manager of the Atomic Energy Commission to report on the SL-1 reactor incident. At the time of this writing (May, 1961), there still remains substantial doubt concerning the initiating event causing the explosion within the reactor pressure vessel. The Board, therefore, feels constrained to restrict its observations concerning cause and responsibility to observable or demonstrable situations and events.

With this reservation, we present our findings at this time.

This report summarizes the current information before the Board pertaining to the circumstances surrounding the explosion on January 3, 1961, within the reactor vessel of the SL-1 (ALPR) reactor plant. Prior to the incident, there appear to have been a continuing deterioration of the burnable poison strips within the core and a worsening of the scram performance of the control rod system, neither of which circumstances necessarily was directly related to the incident. The evidence strongly indicates a nuclear incident of 50 megawatt-seconds, or more, which could credibly have been induced by rapid and extensive motion of the central control rod. There is no evidence to show that the actions of the operators on duty were in any way different than those prescribed and which had been carried out without incident many times before.

2. INTRODUCTION

A. Constitution of the Board

The General Manager, Mr. A. R. Luedecke, appointed a Board of Investigation on January 4, 1961, to investigate and report on the SL-1 reactor incident which occurred on January 3, 1961, at the National Reactor Testing Station (NRTS) in Idaho. 1/

The Board first met during the evening of January 4, 1961, and has continued to perform its functions since that time. Its principal method of gathering information has been through the testimony of witnesses who appeared before the Board. 2/ The Idaho Operations Office, AEC, through its own staff, its Technical Advisory Committee, and its operating contractor, Combustion Engineering, Inc., has been the prime source of information and assistance to the Board. 3/ The Board received additional technical advice and assistance from several observers who attended some of the sessions during which witnesses were interviewed. 4/

B. The SL-1 Reactor

The reactor is a direct-cycle, boiling water reactor designed to operate at 3 MWt gross capacity. The electric power and process heat were dumped to the atmosphere through load banks and heat exchangers, respectively. The reactor is fueled with enriched uranium plates clad in aluminum, moderated and cooled with light water in natural circulation.

The reactor vessel is 4.5 feet in diameter and 14.5 feet high. It is surrounded by gravel on the sides and is supported on a concrete pad resting on lava. The following equipment and

components are located within the large silo-like structure: the reactor vessel, turbine-generator, heat exchanger and other water-handling components, air cooled condenser and fans and miscellaneous control equipment. The reactor control room is located in the adjacent support-facilities building. The reactor building was not designed as a leak-tight containment structure. 5/

At 3 MWt power level, a saturated steam flow of 9000 pounds per hour was generated in the pressure vessel at 300 psig and 420 degrees F. About 85 percent of the steam was used to generate electricity. Fifteen percent of the steam by-passed the turbine into a heat exchanger, which simulated a space-heat load. The air-cooled condenser was used to reduce the requirement for water during plant operation.

A reference reactor core array of 40 fuel assemblies was designed. Channels were provided for a total of nine control rods: five $14\frac{1}{4}$ inch span cross rods and four T-shaped rods. In each rod, the cadmium absorbing section was $3\frac{1}{4}$ inches long, and with the rods positioned at indicated zero withdrawal, the cadmium overlapped the bottom and top of the active core by several inches. It was anticipated that the T-shaped rods would not be used in the reference 3 MWt core of 40 fuel assemblies, but that it might be desirable to use them in a full-size 59-assembly core. (The testimony indicates that the Argonne National Laboratory (ANL) was directed to develop a simple, small core and reactor system, but that to provide for flexibility and possible increased performance demands, the extra fuel and control positions were included in ANL's design.)

70593 O—61——2

Originally, it had been intended to disperse a burnable poison, essentially in the form of boron, fully enriched in boron-10, in the fuel matrix. Because of developmental problems, not necessarily related to the boron in the fuel matrix, it was finally decided to expedite procurement of fuel assemblies by omission of boron from the fuel matrix. The neutron absorber was introduced in the form of thin, flat plates, welded to one or both side plates of the fuel assemblies, as had been done in the Borax III experiment. The full length burnable poison strips, fabricated of X-8001 aluminum and highly enriched boron, were positioned in the core so as not to be adjacent to control rod channels. Additional half-length strips were also attached to the bottom half of the opposite side plate of the 16 fuel assemblies in the center of the core.

3. ADMINISTRATION OF THE REACTOR PROJECT

A. General

The SL-1 reactor, originally designated the Argonne Low Power Reactor (ALPR), was designed as a prototype of a low-power, boiling-water reactor plant to be used in geographically remote locations. A request for such a plant to be built by the AEC was made by the Department of Defense in a letter dated September 27, 1955. The development and final design of the plant were assigned by the Division of Reactor Development, AEC, to the Argonne National Laboratory, to achieve an early operational version of this type of plant. 6/ Pioneer Service and Engineering Company was the architect-engineer and the construction was started

by the Fegles Construction Company in July 1957. The design and proposed operation of the reactor 7/,8/ were reviewed in February 1958 by the Hazards Evaluation Branch of the AEC's Division of Licensing and Regulation and also by the Advisory Committee on Reactor Safeguards. Approval was given by both of these groups for operation of the plant, as designed, at power levels up to 3 MWt. The AEC staff report stated "when higher power-level operation is contemplated, a report of additional hazards and consequences of operation at this new power level should be submitted together with a report of the operating experience at the 3 MW level."

B. Argonne National Laboratory

Argonne's role, under contract with the Division of Reactor Development, included the design, test and initial operation of the reactor plant. This work was carried out between 1955 and February 1959. Initial critical operation took place on August 11, 1958, and test operations culminated in a 500 hour run which terminated in December, 1958. Argonne's official role ended on February 5, 1959, when Combustion Engineering, Inc., assumed contractual responsibility for the plant. While Argonne has had no official responsibility since this time, its employees have, on several occasions, visited the reactor site to observe fuel inspection or have otherwise reviewed plant performance.

C. Combustion Engineering, Inc.

Combustion Engineering, Inc. (CEI) was not involved in the design, construction, or initial operation of the SL-1

reactor. CEI was involved with later operation of the reactor, in modifications to the reactor facility, and the continuation of training of military personnel. Military personnel have been on the site since 1958 for on-the-job training. Combustion Engineering personnel have been on the site since December, 1958. The contract between CEI and the AEC is for the term between December 14, 1958 and September 30, 1962. 9/ It is a cost-plus-a-fixed-fee contract for operation of the reactor and for the performance of research and development work at CEI's plant in Windsor, Connecticut. The contract contains a standard AEC clause concerning Safety, Health and Fire Protection.

This contract is administered by the Idaho Operations Office, AEC, with the day-to-day administration being carried out by the Military Reactors Division of that office.

CEI was responsible for the actual operation of the SL-1 reactor, for the routine training of military personnel and for developmental research programs.

The Contractor provided at the site a Project Manager, Operations Supervisor, a Test Supervisor and a technical staff of approximately six personnel. In recent months, the Project Manager spent approximately half time at the site and half time at the contractor's office in Connecticut. In his absence, either the Operations Supervisor or the Test Supervisor was assigned as the Project Manager. 10/

It was recognized that this situation was a temporary one, in that it was contemplated that a full-time, resident project

manager would be assigned by CEI to the SL-1 plant. In discussion of the candidates for this position, and the necessary qualifications of a candidate, there was considered the existing arrangement whereby military personnel were not directly supervised (by personal, direct observation) during routine plant operation. Since early plans for operation of the SL-1 did not include any plans for any significant development work, the general plan for operation of the SL-1 was to utilize a military staff, comparable to that to be provided for a remote site, for the actual operation of the plant, with on-site supervision above the level of the plant superintendent, and general supervision assigned to the contractor. Because of the vacant position and because of the recent addition of some development work with the SL-1 plant (including the PL-1 condenser test, which required operation at higher power), the CEI "part-time project manager" wrote a letter to the AEC Contracting Officer's Representative, dated November 29, 1960, requesting written confirmation of the oral agreement that CEI shift supervisors were not required for routine supervision of plant operation during the night shifts. It was understood, as indicated by testimony before the Board, that CEI would provide supervision on any shifts when non-routine work was carried out. Further, the operating staff was encouraged to - and frequently did - contact off-duty CEI supervisors if any unusual events or unforeseen circumstances arose when CEI supervision was not present. Testimony before the Board indicated that such an oral

agreement did exist (although the letter had not been answered at the time of the incident) and that CEI did not believe there was any specific need for this supervision, from a safety standpoint, but that the broadened scope of the developmental program with the SL-1 plant suggested reconsideration of this working arrangement, including safety aspects. CEI did suggest that there was enough developmental work on site that CEI supervision might be regularly assigned. Agreement not to do this reflected an AEC decision not to push forward the developmental program with high priority. The testimonial record also indicates that the AEC's Idaho Office and the Army Reactors Office clearly believed that addition of night supervisors when only routine work was involved would defeat a part of the purpose of operating the reactor under the existing arrangement, i.e., to obtain plant operating experience with only military personnel.

A complete technical review of the reactor and its proposed operation was made in February 1959, when Combustion Engineering, Inc. became the Contractor, by a Nuclear Safety Committee composed of personnel from the Connecticut offices of Combustion Engineering. It appears that no other such review or appraisal of the safety of reactor operation has been made since that time by the Combustion Engineering, Inc. Reactor operating procedures, completely satisfactory to the AEC, have never been completed by Combustion Engineering, Inc., although they have been in the process of preparation and revision since mid-1959.

A reactor safety committee existed at the plant site. Its members included the CEI Operations Supervisor, the Test Supervisor, the Health Physicist and the Assistant Operations Supervisor. The Test Supervisor testified that the committee reviewed proposed test procedures and new operating procedures, but did not routinely review reactor operating experience or procedures unless specific problems were brought to it. They did not make any overall comprehensive safety review of operations.

The proposed plans for operation of the SL-1, and the procedures for such operation, were subject to review and approval by the Director, Military Reactors Division, ID. The Contractor has routinely and consistently forwarded reports of reactor operations, including malfunction reports, to the Military Reactors Division. The Director of this Division, and more often the SL-1 Project Engineer on his staff, made frequent visits to the facility.

Regular written reports of reactor operations were forwarded to the Army Reactors Office, Division of Reactor Development, Hq. Periodic appraisals, through visits to the facility, of the safety of the SL-1 plant by members of the ID staff, did not include inspection of the nuclear safety of reactor operations. Trip reports by members of the Army Reactors Office, Headquarters, especially during early operation of the plant, did include specific comments and recommendations concerning the operating procedures and a number of facility components at that time. 11/ Quarterly

review meetings, which dealt with reactor operational experience as well as programmatic plans, were attended by Army Reactors Office personnel as well as the ID personnel.

During a general Headquarters appraisal of ID contract administration, in 1959, assurances of ID reactor safety surveillance, including the SL-1 reactor, were obtained. Independent, validating review, by the Headquarters staff, of the ID reactor safety review system was not performed. There does not appear to have been a clearly defined requirement for this type of appraisal.

D. Department of Defense

Although the SL-1 reactor was a part of the program of the Army Reactors Branch, Division of Reactor Development, AEC, for the development of water reactors for military applications, the Department of Defense did not have the responsibility for this reactor, either under license or as a result of transfer of the reactor from the AEC according to the provisions of section 91b of the Atomic Energy Act. Military personnel at the site were either in training or a part of the cadre operating the reactor under the general supervision of Combustion Engineering, Inc. The plant superintendent, the chief operators (who also were shift supervisors), the qualified operators and trainees were military personnel who operated the plant around the clock according to the procedures and policies provided by the contractor.

E. Atomic Energy Commission

Within the AEC the line of management responsibility for the SL-1 project is from the General Manager to the Assistant General Manager for Research and Industrial Development, to the Director, Division of Reactor Development, to the Manager, Idaho Operations Office (ID), to the Military Reactors Division, ID. Details concerning the definition and delegation of responsibility are given in Annex G.

At the Idaho Operations Office, the Director of the former Division of Military Reactors administered the CEI contract. A reactor engineer on his staff served as project officer for the SL-1 reactor.

Responsibility for safety of reactor operations was shared by each level of the line organization according to its function. Detailed delegation of this responsibility is not spelled out, although Manual Chapter 8401 does assign to the Operations Managers, and others, broad responsibility for assuring safety of reactor operations for those reactors under their contractual jurisdiction. (Evaluation of the hazards of specific reactor designs or operational programs by the staff of the Division of Licensing and Regulation (DLR) is not required, except as the Director of the Operating Division may specifically request. For new facilities, the Operating Division Director usually requests review by DLR before operation, although this is not required and there is no subsequent follow-up at the initiative of DLR. It is similarly not required that the Division Director get DLR review of later

changes in a facility. This later review is often requested, but not as regularly as for new facilities. Later review was not requested for the SL-1. Inspection of reactor operations by the Division of Compliance is not required, but may be requested. Safety review and inspection by the AEC staff are required for all licensed reactors and for certain AEC-owned reactors.)

One area of apparent ambiguity concerning responsibility involved the Army Reactors Branch of the AEC. There was no functional statement (AEC Manual Chapter) for this organization, but a description of the duties of the Assistant Director for Army Reactors (approved by the General Manager on August 31, 1959), appearing on the organizational chart, states that the Assistant Director for Army Reactors "Plans and directs the joint AEC-DOD programs for the development of nuclear power systems to meet DOD requirements other than for naval vessel propulsion and for air and space vehicle applications," and that the Water Systems Project Branch "provides central management and technical supervision of the development, construction and operation of water systems reactors and plant prototypes. Provides direct supervision of work through Project Engineers, assigned individually by project, responsible for project management and continuous review and evaluation of contractor performance and project progress. Prepares and maintains schedules, estimates, budgets, plans, correspondence, scope of work, and technical and operating data on all Branch

projects. Assures the resolution of all technical problems that arise during the design, construction, testing, and operation of Branch Reactor projects."

The Army Reactors Branch also has a separate line responsibility under the Chief, Corps of Engineers, USA, for the Army reactor program, including, for example, the responsibility for the training program for military personnel and also the responsibility for the direction of a research and development program leading to the use of nuclear power plants at remote sites. Testimony from members of this office indicated understanding of the actual responsibility as follows: The Deputy Assistant Director for Army Reactors states "It is clearly understood ..... that we of the Army Reactors were not authorized, in our own name, as such, to direct changes to the contract or to direct operations, give direction to the Idaho Operations." The Assistant Director, in a prepared statement, states, "As a staff member, I am charged with responsibility for planning, observing, advising, appraising and recommending, but I have no direct authority over the operations of subordinate offices of the Division, nor can I give orders to officials in such subordinate offices".

Review by the Hazards Evaluation Branch of the Division of Licensing and Regulation was requested prior to operation, but not subsequently. Review of the SL-1 project by the AEC's Advisory Committee on Reactor Safeguards was not required, but,

on one occasion was requested by the Division of Licensing and Regulation prior to start-up of the reactor but not subsequently. Testimony indicated that Army Reactors personnel believed that requests for such reviews should be initiated by the field office. No requests for independent review were made after initial operation. (The testimony indicates that the loss of boron was well known within the Division of Reactor Development at AEC Headquarters, although it was not categorized as a serious condition in the reports transmitted to Headquarters. The difficulties with operation of the control rods appears not to have been known at Headquarters, and very little knowledge of the extent of the difficulty was known by the AEC staff at ID.)

4. OPERATING HISTORY OF THE REACTOR

A. General

The SL-1 achieved criticality on August 11, 1958, with ten fuel elements containing a total of 3.5 kg of U-235. There followed a series of critical experiments performed in the reactor, with and without poison strips, to determine the optimum fuel and poison loading to achieve the design objectives.[12/]

As a result of these critical experiments, a core was chosen with 40 fuel elements, forty full length and sixteen half length boron strips and five control rods. (Critical experiments were also performed on a full 59 element core that would have had higher power capability, but the design of such a core probably would have called for a different U-235 loading.) The differential and integral worth of the five control rods were obtained as a function of rod insertion into the core. Flux plots were made of the hot, zero power 40 and 59 element cores by use of irradiated gold and copper wires.

On October 24, 1958, the SL-1 achieved its full power rating of electricity and space heat. During October 29 - 30, 1958, a 40-hour xenon run was made. The SL-1 was then shut down and 8 hours later the reactor was brought to full power overriding peak xenon. There followed a 500 hour run at full power. The 500 hour run continued until December 11, 1958. The reactor was operated at a power level of 3 MW(th) up to November 1960. The plant remained shut down until March 6, 1959, for maintenance and inspection and for preparation of operating procedures and manuals. The Army Reactors Branch at this time stated that the procedures and manuals

turned over to CEI by ANL were not satisfactory for use by CEI. CEI was requested to prepare revised material. The material submitted by CEI was accepted as a basis for the start of reactor operations, but CEI was to further develop and modify the operating manuals and procedures after obtaining actual operating experience. Initial test operation by CEI, for the Windsor Nuclear Safety Committee, took place on March 6, and cold critical experiments began on March 30, 1959. The SL-1 was turned over to Combustion Engineering, Inc., for operation in February 1959.

A 1000 hour sustained power run was concluded in July 1959, and the plant then remained shut down for about a month for maintenance, modification and inspection.[13/]

Important shut-downs occurred in August, 1959, January, 1960, November, 1960, and December 23, 1960, to permit maintenance and inspection. Fuel elements were first removed from the core during September, 1959, and inspected by CEI and ANL personnel.

Subsequent inspections took place in October, 1959, August, 1960, and November, 1960. Initial discovery of the bowing of the boron strips, in the three inch sections between tack welds, was made in 1959. During the August, 1960, inspection it was observed that large amounts of the boron strips were missing from some fuel elements and the fuel elements in the center of the core were extremely difficult to remove, by hand. Removal caused plates to fall off and flaking of material. A considerable number of flakes were collected from the bottom of the vessel. As a result of these circumstances, it was felt that further removal of fuel elements might cause further loss of boron,

so that no further inspections were conducted. It was noted during the second periodic inspection in August, 1959, that the central fuel elements were difficult to remove.

B. Reactivity Changes

The design goal for the SL-1 reactor core was operation at design power level (allowing for normal outage) for a period of three years. The boron strips were incorporated in the core design to serve as a burnable poison, the depletion of which would compensate for the burning of fuel. Ideally, such an arrangement would lead to a constant reactivity value for the core (at operating conditions), which would be manifested by a nearly constant position of the banked control rods. The calculated reactivity behavior, in terms of banked rod position, vs. core exposure is given in Figure 1. Also plotted are the observed rod positions as a function of exposure. By 500 MWD, i.e., by May, 1960, it appeared that the core was gaining reactivity faster than predicted. In August, 1960, routine inspection of selected fuel elements revealed the extensive loss of boron. The large rate of gain of reactivity was ascribed to this boron loss.

Of greater safety significance (as opposed to interest in the core lifetime only), the greater rate of reactivity gain, and, in fact, the larger amount of reactivity gain, reduced the capability of the control rods to render the core subcritical (decreased the reactivity shut-down margin). Figure 2 indicates, as a function of core exposure, the banked rod position for different operating conditions. From these data, and from estimates of the worth of the control rods, estimates of the shut-down margin were made.

Because of the reduced shut-down margin, resulting from the boron loss, strips of cadmium were inserted in two of the T-rod control shrouds on November 11, 1960. The banked rod position, with the reactor cold, was determined at an exposure of 711 MWD, but not thereafter. The last part of the curve for the cold condition is an assumption of cold reactivity behavior, based on the observed behavior of the banked rods during equilibrium operation at 2.56MWT. Thus, the effect of the cadmium at 2.56 MWT was observed to be approximately 1% in reactivity, and this was assumed to also be the case with the reactor cold.

CEI's estimate of the reactivity worth of the boron, at the beginning of core life, was 11%. A rough observation of a 2% gain in reactivity, over that predicted which was attributed to the loss of boron, led to the rough estimate that $2 \div 11 = 18\%$ of the boron originally present was missing from the core (this assumes uniform loss of boron from the core and certain other simplifying postulates concerning local reactivity effects).

Although numerical values for core reactivity, rod worth and shut-down margin are all subject to some uncertainty, in varying degree, depending on physical assumptions, the reactor condition, the calculational method or experimental technique, the available information indicates the following:

1. The initial shut-down margin for the cold reactor was probably somewhat less than intended - maybe approximately 3.5% Δ k actual margin versus an estimated 4-6% design margin. The actual margin was considered adequate.

2. The reactor could have been made critical by withdrawal of the central control rod only, anytime since startup of the reactor.

3. At the time of shut-down on December 23, 1959, the shut-down margin for the cold reactor was probably 2 to 3%, assuming rod worth was essentially unchanged from earlier measurements and calculations. With this assumption, and a similar one regarding rod #9 (the central control rod), criticality could be produced by withdrawl of this rod approximately 17 inches from the reference zero position.[14/] Representative critical rod positions are given in Table 1 below.

Table 1
Representative Critical Rod Positions

Date	Core Exposure (MWD)	Conditions	Rods 1, 3, 5, 7 (Inches Withdrawn)	Rod 9 (Inches Withdrawn)
9/16/60	711	407° F, zero power	14.2	14.4
9/16/60	711	2.5 MWt, no xenon	16.6	16.6
9/25/60	736	2.5 MWt, equil. xenon	17.8	17.8
11/6/60	848	2.56 MWt, equil. xenon	17.6	17.6
11/15/60		Cadmium sheets inserted		
11/16/60	853	180° F, zero power, no xenon	13.2	13.2
12/5/60	888	2.56 MWt, equil. xenon	19.3	19.2
12/23/60	932	2.56 MWt, equil. xenon	19.4	19.4

(In the initial critical experiments, with no boron present in the 4 x 4 array of fuel elements and with the side rods fully inserted, criticality was achieved with the central rod 14 to

70593 O—61——3

14.5 inches withdrawn. The small size of this core would increase radial leakage, compared to that for a 40 element core, requiring greater withdrawal for criticality. The addition of cadmium and some boron in the actual core would increase absorption, requiring greater withdrawal for criticality, but would be at least partially offset by the presence of additional fuel. Eight additional bare elements, producing a 6 x 4 array, required insertion of the central rod from 14.5 inches withdrawn to 9.25 inches withdrawn to maintain criticality. These numbers serve to emphasize the uncertainty of the critical rod position in the absence of detailed knowledge of the composition of the core.)

C. Control Rod Drive Experience

From early operations onward, intermittent and increasing difficulty was encountered in the free movement of the control rods. At least over the first year of operations, and possibly in large measure thereafter, the difficulty arose from the abnormal performance of the seals through which the drive shafts penetrated the rack and pinion gear housings on top of the reactor. The rate of flow of seal water affected the performance of the rod drives, as did the presence of foreign matter. Increase filtration apparently reduced the problems associated with foreign matter. A study was in progress to seek an understanding of the variation of the scram performance of the rods, with seal water flow. This variation was not considered a serious problem, in that performance specifications were met, provided the seal water flow was at the design value. It was also stated that movements imposed in scram tests prior to reactor start-up and frequent

exercise of the rods seemed to improve rod performance, possibly by tending to clear out particles of dirt or rust in seals or bearings.

In more recent months, testimony before the Board and operating records indicate increased frequency of malfunctioning of the control rod drives. On the one hand it was postulated by several witnesses that the bowing of the boron strips attached to the fuel elements exerted sufficient lateral force to result in reduction of the clearance within the control-rod shrouds, restricting the free motion of the blades. On the other hand, several witnesses felt there was no evidence for such closing of the shrouds, but that there might be some accumulation of crud on the shroud and blade surfaces; and that exercising the drives tended to prevent sticking of the rods in the shrouds. It was also indicated that the higher power operation, which took place only after November 1960, and the addition of the cadmium strips required further withdrawal of the control rods than had been previously required. Consequently, the drives were being used in a new region of the mechanical structure, where closer tolerances, or other differences, caused increased difficulties with rod motion.

The only known interferences within a shroud were:

1. A crimp or similar bend was observed in the top edge of the No. 1 shroud. A special stainless steel wedge-shaped tool was designed and used to straighten out this defect.

2. A dummy control blade, made of aluminum was fabricated for insertion and irradiation in the No. 4 shroud. On initial insertion, the blade could not be fully inserted. The wedge-shaped tool was used on this shroud also, but since it could not be inserted within the shroud, the actual remedy for insertion of the blade was to cut a portion off of the bottom of the blade.

After the incident a review was made of the Operating Logs from September 1, 1960, through December 23, 1960, by members of the Military Cadre. The data set forth in Annex J give all recorded examples of control rod performance.

According to testimony presented before the Board, all orders in the Night Order Book, for the instruction of reactor operating personnel, are given by either the Operations Supervisor, or the Plant Superintendent with the Supervisor's or Assistant Supervisor's concurrence, and the following orders reflect the efforts of the operations group to maintain the rods in an operable status by frequent exercise: 12/20/60, by the Plant Superintendent -

"Each shift will perform a complete rod travel exercise at approx. 4 hours after the start of shift. This rod exercising will be required of each shift until further notice."

12/21/60 by the Operation Supervisor

"Perform a complete rod travel exercise on the graveyard and subsequent shifts."

12/22/60, by the Plant Superintendent

"Do not perform control rod exercises during 2.56 MW power run." (Testimony indicates that a special power run to get equilibrium data was in progress at this time.)

A review of the Operating Log #13 reflects that the aforementioned orders were complied with by the operators. On December 23, 1960, when the reactor was secured, the Operating Log #13 includes, in part, the following:

"0825 Dropping rods to secure reactor

Rod drop times

#1 no drop

#3 dropped 1/2" and stuck

#5 clean drop in 0.82 sec.

#7 no drop

#9 clean drop in 0.81 sec.

"0827 Driving rods 1, 3, and 7 to zero

"0830 Controlling bypass steam flow to cool down to 2°F/min.

"0835 Rod #3 dropped from 9" to 0.5 sec.

Rod #1 dropped from 16" to 9" in 1.3 sec."

Testimony indicates that this behavior was worse than usual, and that the Assistant Operations Superintendent remembered commenting that this was probably because of the preceding operation (with no rod exercising). The operating procedures

called for "scram-testing" the control rods before and during nuclear start-up of the reactor. Rods were dropped individually from a prescribed height before going critical, and also from another height after achieving operating temperature and pressure in the reactor vessel. Prescribed times for full insertion were given. If the prescribed times could not be met, reactor operation was not to proceed. Testimony indicates that if a rod did not meet the drop-time criterion, the test was repeated.

Review of the experience with control rod performance indicates that this behavior was probably not as bad as had been experienced on some previous occasions, however. A complete record of performance, obtained from the operating logs, is attached as Annex J. The CEI Project Manager and the CEI Assistant Director of the Nuclear Division testified that they were not aware of any significant difficulty with the operation of the control rods and also were not aware of the entries in the log books over the past several months describing these difficulties.

5. Sequence of Events Surrounding the Incident [15/]

After having been in operation for slightly more than two years, the SL-1 was shut down on December 23, 1960. It was planned that maintenance on certain components of the whole system would be performed during the succeeding twelve days and the reactor would again be brought to power on January 4, 1961. While maintenance work on several auxiliary systems of the plant was completed during this period, the only work planned for the reactor core was the insertion of 44 cobalt flux measuring assemblies into coolant channels between plates of the fuel elements throughout the core. Access to the core, to install these assemblies, through nozzles in the head of the reactor vessel required removal of the control-rod drive assemblies. This portion of the work was begun during the early morning hours of January 3, 1961. When the day crew (including personnel from the military and from Combustion Engineering) arrived at the SL-1 on January 3, disassembly had been completed. Installation of the flux measuring assemblies was accomplished during the day shift under the supervision of Combustion Engineering personnel.

The crew of the next shift (4:00 p.m. to midnight, January 3) consisted of three military personnel: the shift supervisor (a qualified chief operator), his operator-mechanic assistant (a qualified operator), and a trainee. This crew and the following one were assigned the task of reassembling the control rod drives

and preparing the reactor for startup.

First indication of trouble at the SL-1 reactor was an automatic alarm received at Atomic Energy Commission Fire Stations and Security Headquarters at 9:01 p.m. (MST) January 3, 1961. The alarm was immediately broadcast over all NRTS radio networks. At the same time, the personnel radiation monitor at the Gas Cooled Reactor Experiment gate house, about one mile distant, alarmed and remained erratic for several minutes.

Upon the receipt of the alarm, which could have resulted from excessive temperature, high radiation, by being struck by a missile, or a pressure surge in the region above the reactor floor, the Central Facilities AEC Fire Department at the NRTS and AEC Security Forces responded. A health physicist from the Materials Testing Reactor (operated for the AEC by the Phillips Petroleum Company) was called at this time.

Upon entering the SL-1 fenced area, the fire department personnel were unable to arouse the SL-1 crew. Access to the reactor support building was gained through use of the security patrolman's keys. The assistant fire department chief entered the reactor support building and immediately detected radiation levels up to 25 roentgens per hour (r/hr). He could observe none of the SL-1 crew in the reactor support building. The health physicist from the Materials Testing Reactor arrived and entered the reactor support building. He observed increasing radiation levels as he

proceeded toward the reactor building; he detected levels of 200 r/hr at the stairway to the reactor.

The decision to enter into the reactor building to attempt to locate the operating personnel was made after the arrival of the CEI plant health physicist. Entry by him, and others, located two of the crew on the floor near the reactor in a radiation field of approximately 1000 r/hr. One of the two crewmen was still living; the other, dead. Removal of the living man was accomplished by approximately 11:00 p.m. Shortly thereafter, he was pronounced dead by one of the AEC physicians who responded to the emergency call.

Subseqent entries were made over the next several days to remove the two remaining bodies and to recover certain equipment and records. Of over 100 people engaged in recovery operations during the first 24 hours after the incident and of the several hundred so engaged in the following week, 22 persons received radiation exposures in the range of three to 27 roentgens total body exposure. Precautionary medical check-ups did not disclose any clinical symptoms.

6. Consequences of the Incident

A. Injury to Personnel

The results of the post mortem examinations of the three deceased persons show that two of them died instantly as a direct or indirect result of blast damage and that the third man may have lived for about two hours after the incident. A fatal wound in the head of this third man precluded any possibility of survival. There was evidence of flash burns to limited areas of the bodies.

Personnel exposures, during the initial recovery operations are listed in the previous section. Since the removal of the third body, exposures to personnel engaged in the recovery operations have been limited to values less than normally allowed to radiation workers, i.e., less than 2.5 r per quarter.

B. Physical Damage

There appears to have been only minor physical damage to the reactor building. A buckling of reactor room ceiling directly above the reactor (the fan room floor) has been observed. Two of the shield plugs were driven upward out of the nozzles in the head of the reactor vessel and penetrated and stuck in the reactor room ceiling. One of these plugs was removed during subsequent operations. A peeling back of a portion of this ceiling indicates the possibility that some additional parts of the reactor system, for example, a shield plug, may have been projected into the fan room area.

Observations made with a pinhole camera for gamma rays indicated the presence of a high level gamma source in the fan room area (there is a possibility that what is being observed is gamma radiation emitted from the reactor but scattered from the structure above the reactor).

No conclusive evidence is yet available as to whether or not the reactor vessel itself has been damaged. Preliminary estimates have been made that the explosion may have caused an internal pressure as great as 500 psi, from observed damage above the reactor vessel and from calculations of energy needed to propel

certain components to observed locations. A portion of the sheet metal, covering some shield material on top of the reactor head, was bent upward, allowing dispersal of some of the gravel, steel punchings, and pelletized boron shielding material.

Photographs taken by movie and closed-circuit TV cameras have shown extensive damage to the core itself. The central control rod, No. 9, and a portion of its shroud appear to have been ejected completely from the core and are lodged below the central nozzle. Control rods Nos. 1, 3 and 7 appear to be within the core, though they may be displaced laterally and vertically to some extent. The shrouds of these control rods have been greatly distorted, and the top of the core is covered with debris from core components such as holddown plates and end boxes from individual fuel element assemblies. The core has been expanded, from internal pressure, to the point that it is in contact with the thermal shield near the wall of the reactor vessel at many points on its circumference removing the 6 to 9-inch clearance in the original core configuration. Two racks, those for Control rods Nos. 1 and 7, are protruding from their respective nozzles, though the threads on the ends of both appear to be damaged. The rack associated with No. 3 rod has been broken off near the upper surface of No. 3 nozzles.

The bell housing over control rod No. 5 rod extension had not been removed during the shutdown work and is still in place.

As a result of this, and because the position of rod No. 9 and its shroud have obscured vision, it is not possible to ascertain the position of this control rod.

The plate over the No. 8 nozzle through which the instrumentation leads from the core passed was blown from the nozzle, stripping the threads from each of the studs. The present location of the No. 8 plate is not known. Of the five shield plugs, only three have been observed, two in the ceiling of the reactor room (one of which was removed) and one lying on the top of the reactor head.

Thermocouple measurements and water-detecting probe measurements in the core have been made. Despite conflicting previous interpretations, it is now generally accepted that the level of the water in the reactor vessel, if indeed there is any water present, is at least 24 inches below the bottom of the active fuel. Since the first observations were made more than a month after the incident it is possible that what water was present just after the incident had evaporated before observation. Although there is no evidence to support it, and activity levels below the reactor vessel, would seem to indicate otherwise, it remains a possibility that the reactor vessel is cracked.

C. Nature of the Incident

In the absence of any direct evidence which would identify the initiating event, which resulted in the explosion within the SL-1 reactor vessel, the Board cannot state what actually

did initiate the incident. There appear to be several conceivable mechanisms, or sequences of events, that could have resulted in the observed effects. The relative credibility of these mechanisms is extremely difficult to establish without further information.

That an explosion took place is quite clear from the observed physical damage within and without the reactor vessel.

Indications that a nuclear excursion took place were provided by the following: 16/

1. Identification of the fission product yttrium-91 isotope, in a metallic sample shaken out of the clothes of one of the deceased.

2. Identification of activated copper (to Cu-64) in a cigarette lighter screw, belonging to one of the deceased.

3. Identification of activated copper in a watch band buckle, belonging to one of the deceased.

4. Identification of activated gold in a finger ring worn by one of the deceased.

5. Identification of activated Cobalt 58 in a gasket from the top of the reactor.

6. Identification of activated Chromium 51 in a gasket from the top of the reactor.

7. Identification of gross fission products in air samples taken one and two days after the incident.

8. Response of monitoring instruments at nearby sites to the passage of a radioactive cloud.

9. Observations of radioiodine contamination of sage brush.

Observed blast effects on equipment, components and personnel are not inconsistent with the conclusion that a nuclear excursion took place. That is, the energy release required to produce the pressures needed to cause the observed effects is comparable to that observed in the destructive BORAX experiment, on the one hand; and credible mechanisms and initial conditions can be postulated, on the other hand, that would lead to such an excursion.

The Board is aware of no chemical, metallurgical or physical analyses of any materials or components, the results of which would support the hypothesis of an initial chemical reaction which then induced a nuclear reaction by rearrangement of core components. In this regard, the Board has been advised that metallurgical examinations made after the incident probably would not establish conclusively whether a metal-water reaction initiated or remitted from a nuclear excursion.

D. Energy Release

One estimate of the energy release is based on the analysis of a metallic sample taken from the clothing of one of the deceased. This sample was analyzed for uranium isotopic composition, mass, and specific yttrium activity. This analysis, related (by assumption) to the total uranium present in the core, led to rough estimate of the total fissions during the excursion of 1.5×10^{18} - equivalent to 50 megawatt seconds. It is believed that an energy release significantly less than this would not have produced the observed blast effects, and that an energy release greater by a factor of 3 or 4 would have produced much more drastic blast effects. Another estimate of the total energy release, based on analogy with SPERT experience, as well as observed atmospheric radioactivity, was a release as great as 500 megawatt seconds, indicating that there may have been more than one burst, or that there was additional lower power operation.

A number of estimates of integrated neutron flux have been made from the determinations of induced radioactivity in various samples (thermal neutron doses from 1×10^8 to 2×10^{10} nvt were

calculated). The extrapolation to the number of fissions in a nuclear excursion is extremely uncertain; however, first, because the energy release (no. of fissions) is not large compared to the cumulative exposure of the core; and second, the unknown effects of shielding (water height, for example) and third, the unknown effect of delayed-neutron emitters released from the reactor vessel into the reactor room.

E. Activity Release

Aerial surveys conducted on several different occasions since the incident, at an altitude of 500 feet and above, have not indicated any activity levels (at the ground) greater than twice background levels. On the basis of meteorological information (inversion conditions, wind direction NNE at a velocity of 4 to 8 mph) and the observation of smoke plumes under similar conditions, together with air and ground samples, it appears that a narrowplume of gaseous fission products traveled SSW from the reactor building. Low-level off-site activity of sagebrush, due to iodine-131, was observed subsequent to the incident. Subseqent sampling in the immediate vicinity of the SL-1 facility indicated that low levels of gaseous iodine were released for a short period of time from the reactor or that iodine released at the time of the incident was undergoing translocation. As of April 7, 1961, measured I^{131} levels were essentially at background; close to the reactor building, soil samples did indicate a low contamination by strontium-90 for a period of time after the incident. Determinations of the strontium 90 content in five soil samples collected on

January 13, 1961 ranged from 1018±18 d/m/20gm near the Support Facility building, to 65± 8 d/m/20gm approximately 20 feet east of the guard house along the perimeter fence.

Intermittent radiation surveys in the vicinity of the SL-1 plant indicate that the gamma radiation has not decreased an appreciable amount. During the first week in February dose rates varied from the order of 10 r/hr, measured at the base of the reactor building, below the cargo door, to the order of 100 mr/hr, measured at a distance of approximately 300 feet from the reactor building.

The implications of an SL-1 incident to the public in a populated area is discussed in a memorandum which is attached as Annex M.

7. Possible Mechanisms for the Incident

From consideration of the factors which may have caused this accident, it is possible to conceive of several different items or combination of items which may have constituted the immediate initiating event. The accident could have occurred with no errors being committed on the part of the crew, though certain errors on the part of the operators also can be visualized as possible initiating events.

It is known that the tasks assigned to the operators (reassembly of control rod drives) involved the lifting of the control blades. Testimony before the Board indicates that the Chief Operator and the Operator had performed this same task at least four times before the occasion in question and that they had received specific training for this operation.

Their training procedure [17] included the explicit instruction that during disassembly, the control rod was not to be raised more than four inches. The reason for this limit was not given in the procedure. From the positions of the men after the incident and the injuries they suffered, we are unable to rule out the possibility that one, or possibly two, of them were engaged in lifting the central rod at the time of the explosion. At present, however, there is no direct evidence on this point.

In the light of measurements made prior to the reactor shutdown on December 23, 1960, it would have been necessary to raise the central control rod a minimum of 16 inches at that time to produce criticality. On the basis of existing information on the reactivity worth of the central control rod (prior to shutdown) and the results of BORAX and SPERT experiments, [18] it is estimated that this rod would need to be withdrawn another 6 to 8 inches at a rate of approximately 24 inches per second in order to produce a nuclear excursion of the magnitude estimated to have occurred. While these actions and conditions appear credible, they do not appear probable in the light of the evidence thus far available.

Additional factors can be considered at this time, which involve the possibility that some changes occurred in the properties of the reactor between December 23, 1960 and January 3, 1961 - changes which would minimize the capability of the control rod system to maintain the reactor shutdown. There is no direct evidence at present that any such changes

70593 O—61——4

took place. If loss of cadmium or loss of boron did occur during the shutdown period in question, the shutdown margin of reactivity would have been reduced. With a reduced shutdown margin of reactivity, substantially less withdrawal of the central control rod would have produced criticality. 19/

Other conceivable initiating events, though at the present their likelihood appears to be low, include: 20/

(a) A water-metal, hydrogen explosion, or other chemical reaction, below the reactor core, which would drive the central rod or several of the rods up out of the core, or that would lift the seal plugs and therefore the attached rods by a general pressure increase.

(b) Addition of water to a core which had become dry and otherwise changed.

It should be emphasized that the foregoing discussion is limited to possibilities and is not intended to imply any degree of probability. It appears now that the most likely immediate cause involved some unusually large and rapid movement of the central control rod.

8. Conclusions

In the absence of additional information concerning the initiating event for the incident, the Board is unable at this time to be more specific about the nature, cause and extent of the incident.

A. An explosion occurred in the SL-1 reactor at approximately 9:00 P.M., on January 3, 1961, resulting in the death of three persons, in damage to the reactor and to the

reactor room, and in high radiation levels (approximately 500-1000 r/hr) within the reactor room. On April 1, the levels had decreased to the order of 100-200 r/hr and were decaying with a half-life of approximately 40 days.

B. Two members of the crew were killed instantly by the explosion. The third died within about two hours as a result of an injury to the head.

C. The explosion involved a nuclear reaction. The thermal nvt above the reactor was estimated to have been approximately 10^{10} n/cm^2, and may have resulted from more than a single burst of radiation.

D. Chemical and radioactivity measurements on a single fragment of reactor fuel ejected by the explosion, if representative of the total fuel, suggest that the reaction may have resulted in 1.5×10^{18} fissions. This would have produced 50 megawatt-seconds of energy. Other estimates, based on decay of gaseous activity and on analogy with SPERT and BORAX experimental results, give a range from 100 MW-seconds to 500 MW-seconds, for the total energy release.

E. At the time of the explosion, the reactor crew appears to have been engaged in the reassembly of control rod mechanisms and housings on top of the reactor. The pressure generated within the reactor, which probably reached several hundred pounds per square inch, was

vented through a number of partially closed nozzles in the head of the reactor, blowing out shield plugs, portions of control rods, and some fuel.

F. The explosive blast was generally upward from the ports in the top of the reactor. Structural damage to the building, principally due to objects projected from the nozzles, was slight. Damage to the reactor core is extensive, although there does not appear to have been gross melting of the aluminum core.

G. Some gaseous fission products, including radioactive iodine, escaped to the atmosphere outside the building and were carried downwind in a narrow plume. Particulate fission material was largely confined to the reactor building, with slight radioactivity in the immediate vicinity of the building.

H. At this time it is not possible to identify completely or with certainty the causes of the incident. The most likely immediate cause of the explosion appears to have been a nuclear excursion resulting from unusually rapid and extensive motion of the central control rod. As yet there is no evidence to support any of several other conceivable initiating mechanisms.

I. It is known that a variety of conditions had developed in the reactor, some having their origin in the design of the reactor and others in the cumulative effects of reactor operation, which may have contributed to the

cause and extent of the incident. Among these conditions were the loss from the core of the burnable boron and the condition of the control rods that caused sticking.

FOOTNOTES

1 / Copies of the teletypes concerning formation of the Board of Investigation area attached as Annex A.

2 / A list of witnesses, who appeared before the Board, is attached as Annex B.

3 / The membership of the Technical Advisory Committee is given in Annex C.

4 / A list of observers is given in Annex D.

5 / A series of photographs and drawings are attached as Figures 4 through 8.

6 / AEC Staff Paper AEC 420/27 Argonne Low Power Reactor Project, October 31, 1955.

7 / ALPR Preliminary Design Study, ANL-5566, April 1956.

8 / Hazard Summary Report on the ALPR, ANL-5744, completed October 1957, published November 1958.

9 / Pertinent contractual arrangements and agreements are given in Annex F.

10/ An organization chart for the CEI administration of the SL-1 plant is attached as Annex I.

11/ A summary of inspections and visits is attached as Annex E.

12/ Detailed test results are given in a report of a talk by D. H. Shaftman, on "Pre-Power, Zero-Power Reactor Physics-Experiments in the ALPR, Presented at ANPP Reactor Analysis Seminar, October 11, 1960" and "Initial Testing and Operation of the Argonne Low Power Reactor (ALPR)", ANL-6084, December 1959.

13/ A detailed chronology of reactor operation is attached as Annex H. A summary of equipment malfunctions is attached as Annex K.

14/ A representation of control rod worth is attached as Figure 3.

15/ A detailed chronology of events before and after the incident was contained in the AEC press release of January 12, 1961.

16/ Detailed results of activation data are attached as Annex L.

17/ A copy of the procedure is attached as Annex N.

18/ A discussion by a Board Consultant of considerations of rate of change of reactivity and total change of reactivity related to energy release is attached as Annex O.

19/ A discussion by a Board Consultant of possible reactivity additions, since construction, of the SL-1, is attached as Annex P.

20/ A discussion by a Board Consultant of the significance of chemical reactions in the SL-1 incident is attached as Annex Q, and a metallurgical evaluation of the SL-1 core components is attached as Annex R.

ANNEX A

TELETYPES CREATING BOARD OF INVESTIGATION

January 4, 1961

"TO CURTIS NELSON CHAIRMAN OF SPECIAL INVESTIGATING BOARD ON SL-1 INCIDENT CMM INFO ALLAN C JOHNSON FROM A R LUEDECKE PD PURSUANT TO AEC MANUAL CHAPTER 0502-042 A CMM I HAVE CONSTITUTED A SPECIAL BOARD OF INVESTIGATION TO CONSIST OF YOU AS CHAIRMAN AND OF THE FOLLOWING MEMBERS CLN DONALD I WALKER CMM IOO CMM CLIFFORD BECK CMM PETER MORRIS CMM AND FORREST WESTERN CMM HQ PD
THE BOARD IS TO INVESTIGATE AND REPORT TO ME ON THE INCIDENT CMM PURSUANT TO AEC MANUAL CHAPTER 0502-042 AND AEC APPENDIX 0502-043-A PD AN INTERIM REPORT SHOULD BE SUBMITTED TO ME AT THE EARLIEST POSSIBLE TIME WITH COPY TO MANAGER OF OPERATIONS PD
I HAVE INSTRUCTED THE IDAHO MANAGER OF OPERATIONS TO MAKE AVAILABLE TO YOU AS YOUR COUNSEL THE CHIEF COUNSEL CMM IOO CMM AND TO PROVIDE THE SERVICES OF OTHER PERSONNEL OF IOO AS REQUIRED PD PLEASE FEEL FREE TO CALL ON ME FOR ANY ASSISTANCE YOU MAY NEED IN OBTAINING THE SERVICES OF ANY OTHER CONSULTANTS OR EXPERTS WHICH YOU MAY REQUIRE PD GM CLN ARL END AEC 82"

January 4, 1961

"TO CURTIS NELSON CMM CHAIRMAN OF SPECIAL INVESTIGATING BOARD ON SL-1 INCIDENT CMM IOO CMM IDAHO FALLS CMM IDA INFO TO ALLAN JOHNSON FROM A R LUEDECKE
I HAVE DESIGNATED DR WILLIAM K ERGEN CMM OAK RIDGE NATIONAL LABORATORY SMCLN DR BENJAMIN LUSTMAN CMM BETTIS LABORATORY CMM PITTSBURGH CMM PA SM CLN DR JAMES H STERNER CMM EASTMAN KODAK COMPANY CMM ROCHESTER CMM NY SMCLN AND DR WARREN NYER CMM PHILLIPS PETROLEUM COMPANY CMM IDAHO FALLS TO SERVE AS CONSULTANTS TO YOUR INVESTIGATIVE COMMITTEE ON THE SL-1 INCIDENT PD THESE CONSULTANTS ARE IN ADDITION TO OTHER PEOPLE YOUR COMMITTEE MAY WISH TO CALL ON FOR ADVICE AND ASSISTANCE PD
PLEASE CONTACT ME RELATIVE TO DESIRED TIME AND PLACE AVAILABILITY OF ABOVE CONSULTANTS PD GM CLN ARL AEC 106"

ANNEX B

WITNESSES WHO APPEARED BEFORE BOARD

January 5, 1961

Allan C. Johnson, Manager, ID

John R. Horan, Director, Health and Safety Division, ID

W. C. Bills, Deputy Director, Health and Safety Division, ID

George L. Voelz, M.D., Chief, Medical Services Branch, Health and Safety Division, ID

Capt. R. L. Morgan, Project Officerfor SL-1, Military Reactors Division, ID, and Chief, INPFO, U. S. Army, Idaho Falls, Idaho

V. V. Hendrix, Director, Military Reactors Division, ID

Sidney Cohen, SL-1 Test Supervisor, Combustion Engineering, Idaho Falls, Idaho

January 6, 1961

W. B. Allred, Project Manager, Combustion Engineering, Windsor, Conn.

John Anderson, Assistant Director, Nuclear Division, Combustion Engineering, Windsor, Conn.

John R. Horan, Director, Health and Safety Division, ID

Charles W. Luke, Project Physicist, Combustion Engineering, Idaho Falls, Idaho

Joseph R. Dietrich, Vice President, General Nuclear Engineering Corporation, Dunedin, Florida

Milton Levenson, Senior Chemical Engineer, Argonne National Laboratory, Argonne, Illinois

P. R. Duckworth, SL-1 Acting Site Representative and Operations Superintendent, Combustion Engineering, Idaho Falls, Idaho

M/Sgt. (E-7) R. C. Lewis, SL-1 Plant Superintendent, U. S. Air Force

January 7, 1961

SFC (E-6) G. J. Stolla, SL-1 Chief Operator, U. S. Army

SFC (E-6) G. B. Millar, SL-1 Chief Operator and Electronic Section Chief, U. S. Army

M/Sgt. R. C. Lewis, SL-1 Plant Superintendent, U. S. Air Force

T/Sgt. C. E. Woodfin, SL-1 Chief Operator and Chief Instructor, U. S. Air Force

Allan C. Johnson, Manager, ID

W. P. Rausch, Assistant Operations Supervisor, Combustion Engineering, Idaho Falls, Idaho

January 8, 1961

Executive session and meetings with observers and the Technical Advisory Committee. No witnesses called. The Board also visited the site of the incident.

January 9, 1961

E. J. Vallario, Health Physicist, Combustion Engineering, Idaho Falls, Idaho

SFC (E-7) R. M. Bishop, SL-1 Chief Operator and Maintenance Section Chief, U. S. Army

P. R. Duckworth, SL-1 Acting Site Representative and Operations Superintendent, Combustion Engineering, Idaho Falls, Idaho

SFC (E-6) H. L. Kappel, SL-1 Chief Operator and former Chief Instructor, U. S. Army

SP5 R. D. Meyer, SL-1 Chief Operator, U. S. Army

January 10, 1961

SFC (E-6) D. R. Deddens, SL-1 Operator, U. S. Army

M/Sgt. M. B. Hobson, SL-1 Chief Operator and Electrical Section Chief, U. S. Air Force

January 10, 1961 (Cont.)

T/Sgt. R. A. Feil, SL-1 Chief Operator, U. S. Air Force

W. A. Moshberger, Assistant Chief, Fire Department, Hazards Control Branch, Health and Safety Division, ID

K. R. Deardon, Captain, Fire Department, Hazards Control Branch, Health and Safety Division, ID

J. M. Brooke, Director, Security Division, ID

J. L. Rock, MTR Health Physics Technician, Phillips Petroleum Company, Idaho Falls, Idaho

D. E. Richards, MTR Health Physics Technician, Phillips Petroleum Company, Idaho Falls, Idaho

M. J. Arave, Patrolman, Patrol and Enforcement Branch, Security Division, ID

January 11, 1961

M. Ruth Guffey, Personnel Metering Branch, Health and Safety Division, ID

Sgt. R. M. Bishop, SL-1 Chief Operator and Chief, Maintenance Section, U. S. Army

SFC (E-7) P. J. Conlon, NCOIC and Training Officer, SL-1 Cadre, U. S. Army

Sgt. O. K. Soward, SL-1 Operator, U. S. Army

Capt. J. T. Westermeier, Former Cadre Cmdr., SL-1 Cadre, U. S. Air Force

SP5 J. B. Davis, Process Control Technician, U. S. Army

January 18, 1961

Capt. Stephens W. Nunnally, U. S. Army, Former Chief, SL-1 Cadre

Lt. Ronald Phillip Cope, U. S. Navy, Former Chief, Boiler Operations Branch, SL-1

M/Sgt. R. C. Lewis, SL-1 Plant Superintendent, U. S. Air Force

January 18, 1961 (Contd)

W. P. Rausch, Assistant Operations Supervisor, Combustion Engineering
Idaho Falls, Idaho

January 19, 1961

Lt. Col. H. C. Schrader, Deputy Assistant Director For Army Reactors

V. V. Hendrix, Director, Military Reactors Division, ID

January 20, 1961

Joseph Crudele, Former Operations Supervisor, SL-1 Project, Combustion Engineering

January 21, 1961

John Anderson, Assistant Director, Nuclear Division, Combustion Engineering

W. B. Allred, Project Manager, Combustion Engineering, Windsor, Conn.

February 16, 1961

Capt. A. Nelson Tardiff, Project Officer, Army Reactors, DRD, Hq. U. S. Air Force

Col. Gordon B. Page, Assistant Director, Army Reactors, DRD, Hq., U. S. Army

April 13, 1961

Lt. Cmdr. Charles W. Mallory, U. S. Navy, Chief, Water Systems Project Branch, Army Reactors, DRD, Hq.

Capt. Robert L. Morgan, U. S. Army, Reactor Engineer, Military Reactors Division, ID

ANNEX C

THE TECHNICAL ADVISORY COMMITTEE

C. Wayne Bills, ID, Chairman
F. W. Thalgott, Argonne National Laboratory, Idaho
Milton Levenson, Argonne National Laboratory, Lemont
D. H. Shaftman, Argonne National Laboratory, Lemont
W. C. Lipinski, Argonne National Laboratory, Lemont
R. O. Brittan, Argonne National Laboratory, Lemont
D. R. deBoisblanc, Phillips Petroleum Company, Idaho
Warren Burgus, Phillips Petroleum Company, Idaho
K. Z. Morgan, Union Carbide Nuclear Company, Oak Ridge

CONSULTANTS TO THE COMMITTEE

J. H. Kittel, Argonne National Laboratory, Lemont
R. T. Vogel, Argonne National Laboratory, Lemont

ANNEX D

LIST OF OBSERVERS

E. J. Bauser, Capt., U. S. Navy, Staff Member, Joint Committee on Atomic Energy, Washington, D. C.

Herbert Cahn, Physicist, Combustion Engineering, Windsor, Conn.

R. L. Doan, Manager, Atomic Energy Division, Phillips Petroleum Company, Idaho Falls, Idaho

Angelo Giambusso, Division of Reactor Development, AEC, Hq.

W. L. Ginkel, Assistant Manager, Idaho Operations Office, AEC, Idaho Falls, Idaho

Robert Hellens, Physicist, Combustion Engineering, Windsor, Conn.

Allan C. Johnson, Manager, Idaho Operations Office, AEC, Idaho Falls, Idaho

Captain H. W. Johnson, Reactor Engineer, Military Reactors Division, Idal Operations Office, Idaho Falls, Idaho

Captain D. C. King, AFIG Staff, DNSR, Kirtland Air Force Base, Albuquerqu New Mexico

E. J. Leahy, Health Physicist, NRDL, San Francisco, California

Lt. Col. D. G. MacWilliams, DMO, Office of Chief Chemical Officer, Washington, D C.

Meyer Novick, Director, Idaho Division, Argonne National Laboratory, Idaho Falls, Idaho

Loren K. Olson, Commissioner, U. S. Atomic Energy Commission, Washington, D. C.

Lt. G. A. Roupe, Kirtland Air Force Base, Albuquerque, New Mexico

Maj. C. A. Scheuch, M.D., AFSWC and NASA, Kirtland Air Force Base, Albuquerque, New Mexico

Capt. R. A. Schwartz, Army Reactors Branch, Division of Reactor Development, AEC, Hq.

Vincent A. Walker, Division of Compliance, AEC, Hq.

ANNEX E

William F. Finan, Assistant General Manager for Regulations and Safety

March 10, 1961

Peter A. Morris, Assistant Director for Reactors
Division of Compliance

SL-1 INSPECTIONS AND VISITS

CO:PAM

1. Introduction

At your request, an investigation was made to determine the extent to which inspections or compliance-type appraisals of the SL-1 plant and its operation were conducted by the AEC, military personnel or the contractor. The information available was obtained from the files of the Army Reactors Office, DRD, the Argonne National Laboratory, and from the Idaho Operations Office.

II. Summary

a. There has been no continuing, comprehensive program for review of operational safety of the SL-1 reactor, comparable to that provided by periodic compliance-type inspections.

b. There have been numerous visits to the site, quarterly reviews of the contractor's performance, and specific investigations, but only two instances are known where overall reactor operational safety was a major consideration. One comprehensive review by the contractor and one detailed study by a representative of ARM/DRD were made prior to routine operation of the plant by the contractor (i.e., before March 1959).

(continued)

III. Discussion

A. Inspection History for the SL-1

Review of the available records indicate that a number of visits have been made to the SL-1 facility, and a number of appraisals of contractor performance have been made, both on a periodic and also a non-scheduled, basis.

The records indicate that, with the exceptions listed below, there were no inspections and evaluations of reactor performance and safety, specifically, that were comparable to those carried out by the Division of Compliance of licensed facilities. The exceptions to this were:

1. Combustion Engineering, Inc., through its Nuclear Safety Committee, conducted a thorough appraisal of the facility and its proposed operation, including reactor safety, by CEI on March 19, 1959.

2. There were, between August 1958 and September 1960, approximately 20 visits by military personnel (26 individual persons, primarily from ARM/DRD and NPFO/Ft. Belvoir), for which written trip reports are available and have been reviewed. Except for the report made following the January 1959 visit (prior to assumption of responsibility by CEI), which found that the reactor plant was "substandard in areas of operation, design and construction, safety and maintenance," each of these visits was related to a specific problem (for example, crud formation) or only programmatic considerations.

There were, between December 1958 and October 25, 1960, twenty-one visits by military personnel for which there are no trip reports available. Again, the 27 individuals involved in these visits were primarily from ARM/DRD and NPFO/ Ft. Belvoir.

It appears that no single military individual visited the reactor plant more than four times between August 1958 and October 1960.

(continued)

3. Review of the SL-1 Contractor performance was made by the ID Military Reactors Division by (according to a letter from the Director, Military Reactors Division):

a. Informal Reviews

1) Quarterly Review Meetings
2) Unscheduled Plant Visits
3) Day to Day Program Discussion
4) Telephone conversations to Windsor
5) Liaison representative at Windsor

b. Review and Approval of Administrative and Operating Procedures.

c. Review of CEI Reports

1) Quarterly Progress Report
2) Annual Operating Report
3) Topical Reports
4) Malfunction Reports (There were 38 of these during CEI's operation of the plant.)
5) Hazards Summary Report
6) Design Reports
7) Reactor Operating Manuals (as required)
8) Health and Accident Report (Monthly)
9) Other administrative reports

d. Review of Extraordinary and Problem Situations

e. Physical Reviews and Inspections (Made and reported on by the Divisions of ID as required)

During FY 1960 the following reviews were performed:

1. Accounting System
2. Property Management Appraisal
3. Health, Safety and Fire Review
4. Security Survey

f. Annual Appraisal Report.

Our review of reports of Quarterly Reviews indicates that operational safety has not been discussed extensively since the meeting of April 15, 1959. Our review of reports of Health, Safety, and Fire Reviews indicates that these reviews did not encompass operational safety of the reactor at all.

(continued)

70593 O—61——5

B. Compliance Inspection

The primary objective of compliance inspection of privately owned reactors has been and is to gather information to show whether or not the licensee, or permit holder, is in compliance with the Atomic Energy Act, the rules and regulations of the AEC and any special conditions of a construction permit or license. Those of us who have been charged with this responsibility have always felt strongly, however, that the compliance inspector also has a responsibility for gathering information to show the extent to which the actual or proposed operation of the facility endangers the health and safety of the public. This latter responsibility, we believe, arises because the primary purpose of the regulatory program is to protect the health and safety of the public and, at the present time, there are not, and cannot be, a set of regulations, standards, license conditions, or other rules, that by themselves, will guarantee an acceptably low level of risk attending reactor operation, without seriously stifling the industry.

To accomplish the above objectives we have strived for two principal goals. Briefly, these are competence of the inspector and familiarity with the facility and its operation. To achieve the first of these goals we have used as reactor inspectors only those who have had five years or more of responsible reactor experience. Such experience includes direct operational and supervisory assignments and direct technical support assignments. To achieve the second goal it is our practice, insofar as feasible, to have a single inspector assigned to a given facility throughout the construction period, the initial startup and test period and during early, routine operations. During construction of a large power reactor visits to the site might average one per month, for example.

We do not attempt to duplicate the work of the reactor owner, which duplication, in effect, would divide responsibility for safety, but we do seek to gather sufficient information to allow a mature appraisal of the overall safety of the reactor operation. Not the least important in this appraisal is information concerning management interest, ability and effectiveness in directing safe operation.

(continued)

IV. Conclusion

Although many visits to the SL-1 site were made, and although a number of studies were made related to individual aspects of reactor safety, in our view these activities did not constitute compliance-type inspections. We conclude that there were no compliance inspections of the SL-1 reactor.

ANNEX F

CONTRACTUAL ARRANGEMENTS AND AGREEMENTS

1. Atomic Energy Commission and Combustion Engineering, Inc.

The following excerpt from the AEC and CEI contract defines the responsibilities of CEI in operating the SL-1 reactor: Contract No. AT(10-1)-967 between Combustion Engineering, Inc and the Atomic Energy Commission is for the term between December 14, 1958, and September 30, 1962. It is a cost-plus-a-fixed-fee contract for operation of the reactor and for the performance of research and development work at Combustion Engineering's plant in Windsor, Connecticut. The objectives of the contract are:

1. to gain, through SL-1 plant operation:
   - (a) data and experience at design and off-design conditions in support of the Army Boiling Water Reactor Program.
   - (b) knowledge of the costs of operating the SL-1 on both a commercial and a Government-accounting basis.
   - (c) familiarity with the problem areas encountered through sustained operation.

2. to carry on the Army Boiling Water Reactor Program of research and development toward meeting the overall Commission objective of obtaining simple, economical, easily-erected, boiling water nuclear power plants of various power capacities.
3. to train, and assist others in training, crews to operate the SL-1 and other reactor installations.

* * *

The contract dated 2/29/59, in Article II, Statement of Work, on page 14, states: "In the performance of its undertakings under this paragraph B., the Contractor shall use assigned military personnel to the greatest extent consistent with its responsibilities for safe operation of the ALPR."

Modification No. 4 (cont'd)
Supplemental Agreement
Contract No. AT(10-1)-967

ARTICLE III - STATEMENT OF WORK (Cont'd)

M. Disclaimer. The Commission makes no warranty or representation as to the quality, safe condition, working condition, state of repair or adequacy (for the purposes of the work or otherwise) of any premises or item of equipment or material of any kind coming into the possession or control of the Contractor or to be used by it in the performance of the work.

ARTICLE XXI - SAFETY, HEALTH AND FIRE PROTECTION

The Contractor shall take all reasonable precautions in the performance

of the work to protect the health and safety of employees and of members of the public and to minimize danger from all hazards to life and property, and shall comply with all health, safety, and fire protection regulations and requirements (including reporting requirements) of the Commission. In the event that the Contractor fails to comply with said regulations or requirements of the Commission, the Contracting Officer may, without prejudice to any other legal or contractual rights of the Commission, issue an order stopping all or any part of the work; thereafter a start order for resumption of work may be issued at the discretion of the Contracting Officer. The Contractor shall make no claim for an extension of time or for compensation or damages by reason of or in connection with such work stoppage.

The contract is administered by the Idaho Operations Office, AEC - with the day-to-day administration being carried on by the Military Reactors Division of that office. The Idaho Operations Office reports to the Division of Reactor Development which is responsible for planning, directing and coordinating the work of the Idaho Operations Office in order to accomplish approved programs. Within the Division of Reactor Development, the Army Reactors Branch is responsible for the part of the program being performed by Combustion Engineering under Contract No. AT(10-1)-967. Informal contacts existed between the Idaho Operations Office and the Army Reactors

Branch - usually, in connection with technical, programmatic and budgetary matters.

Military personnel from three services (Army, Navy and Air Force) were assigned to the SL-1 for training. Such personnel performed operational and maintenance functions under the overall management and technical direction of Combustion Engineering.

The contract dated 2/29/59, in Article II, Statement of Work, on page 14, states: "In the performance of its undertakings under this paragraph B., the Contractor shall use assigned military personnel to the greatest extent consistent with its responsibilities for safe operation of the ALPR."

The Combustion Engineering, Inc., Project Manager, W. B. Allred, testified before the Board (and his testimony was corroborated by V. V. Hendrix, Director, Military Reactors Division, IDO), that during all contract negotiations and prior to formalization of the contract, it was understood by both parties, CEI and IDO, that CEI would permit the Military Cadre to perform routine reactor operations without supervision by CEI.

2. Atomic Energy Commission and Argonne National Laboratory.

The design of the SL-1 (then ALPR) reactor was assigned to the Argonne National Laboratory as a task under Contract W-31-109-ENG-38 with the University of Chicago. This contract was

administered by the Chicago Operations Office through its Programs Division. An active interest in the design and operation of the reactor by ANL, and the role of COO, was also maintained by the Army Reactors Office, Division of Reactor Development.

ANNEX G

FUNCTIONS AND DELEGATIONS

Section 0103 - 46 FUNCTIONS AND DELEGATIONS DIVISION OF REACTOR DEVELOPMENT

* * *

"462 Responsibility of the Director. The Director, Division of Reactor Development is responsible to the Assistant General Manager for Research and Industrial Development for the performance of functions assigned to the Division of Reactor Development. Specifically the Director is responsible for:"

* * *

"d. Planning, directing and coordinating the work of the Division (and the Operations Offices reporting to the Division) in order to accomplish approved programs."

* * *

Section 0103-48 FUNCTIONS AND DELEGATIONS IDAHO OPERATIONS OFFICE

* * *

"481 Functions. The Idaho Operations Office is assigned the following functions:"

* * *

"c. assuring that all activities relating to the NRTS as a

whole are carried out in a manner to guard the security, health and safety of employees and the public, and to protect the property of the AEC, its contracts and the public; such functions in the case of activities at NRTS which are administered by other Operations Offices are to be carried out in cooperation with those other Operations Offices;"

* * *

"482 Responsibility of the Manager of Operations. The Manager, Idaho Operations Office, is responsible to the Director, Division of Reactor Development, for the performance of functions assigned to the Idaho Operations Office. Specifically, the Manager is responsible for:"

* * *

"c. planning, directing and coordinating the work of the Idaho Operations Office in order to accomplish approved programs;"

* * *

Section 0103-48 - FUNCTIONS AND DELEGATIONS IDAHO OPERATIONS OFFICE

* * *

ID Appendix 0103-485K DIVISION OF MILITARY REACTORS

"1. Functions. The Division of Military Reactors will:"

* * *

"(b) Provide technical review and control of assigned Military reactor projects.

"(c) Plan and coordinate action necessary to the effective, satisfactory, and timely accomplishment of the assigned Military reactor programs."

* * *

It should be noted that while the Division of Licensing and Regulation has no "in-line" responsibility for management of the SL-1 reactor operations, the division has been assigned responsibility for certain aspects of nuclear safety of reactors, as shown by the following excerpts:

"Section 0103-08 FUNCTIONS AND DELEGATIONS DIVISION OF LICENSING AND REGULATION

"081 Functions. The Division of Licensing and Regulation is assigned the following functions:

* * *

"f. Developing health and safety standards, guides, and codes for the design, operation, supervision, containment, and location of all reactors including both AEC and privately owned reactors. (Effective May 21, 1956)

"g. Evaluating all reactor proposals with regard to design, operation, supervision, containment, and location, on the basis of established health and safety standards, guides, and codes. This will include reviewing all per-

tinent reactor hazard information. (Effective May 21, 1956)

"h. Coordinating all phases of the AEC's reactor safety programs, assisting appropriate divisions in initiating new or amplifying existing projects in this field, and making such recommendations and suggestions as appear necessary in various phases of these programs. Specifically, the following functions are included:

1. to keep informed of all programs within the AEC relating to understanding and minimizing the possibility and consequences of reactor accidents;
2. to identify all requirements for further information and areas needing further study;
3. to inform appropriate operating groups of programs needing action;
4. to assist in further definition of principles leading to acceptable balance between requirements of safety and economics of reactors;
5. to bring together groups or parties having mutual interest in particular safety problems;
6. to promote the interchange of information on safety programs; and

7. to collect, organize, and transmit information from originating groups on particular areas or problems of safety." (Effective September 13, 1957)

* * *

* * *

The following excerpts from the AEC Manual further define responsibilities for reactor safety determinations:

"CHAPTER 8401 REACTOR SAFETY DETERMINATION

"*8401-01 Purpose and Scope

"This Chapter provides a guide for the preparation and processing of reactor Hazard Summary Reports (See Section -04 below) and for the authorization of construction, modification, start-up and operation of both licensed and AEC-owned reactors. Specifically, it establishes:

"a. AEC policy on evaluating safety aspects of proposed new reactors or significant modifications of existing reactors;

"b. the responsibilities of the Director, Division of Civilian Application, Directors of Operating Divisions, Managers of Operations and other officials in such evaluation; and

"c. responsibility for authorizing the start-up and operation of new or significantly modified reactors.*

"*8401-02 Policy

"In order to protect the health and safety of the public, and employees working in reactor facilities, and the safety of public and private property, it is the policy of the AEC to evaluate the potential nuclear hazards of each proposal to build a new reactor or to significantly modify an existing reactor to determine that the hazard which the reactor presents is acceptable.*

"8401-03 Responsibilities

"*031 Assistant General Managers shall, upon receipt of the recommendations outlined in 8401-032(e), and upon a positive determination that the hazards presented by the proposal do not constitute an undue risk to the health and safety of the public, approve construction, modifications, start-up and operation of the reactor under consideration.

"*032 Directors of Operating Divisions shall:

"a. assure that Operations Offices under their jurisdiction apply the AEC reactor safety standards, guides and codes;

"b. review the Hazard Summary Report, together with any comments submitted by the Managers of Operations for all reactors under their supervision, from the standpoint of completeness and adequacy, and obtain from the contractor or Manager of Operations such information as, in their opinion, is needed to evaluate properly the nuclear hazard associated with the facility;

"c. prepare such comments as are considered appropriate and submit them together with 18 copies of the report to the Division of Civilian Application with a formal request that an evaluation of the hazard aspects of the reactor be made. This request should give some indication of the urgency of the program under consideration and should indicate what, if any, preliminary advice and recommendations are needed prior to final evaluation;

"d. obtain all additional data needed by the Division of Civilian Application during its review of the subject reactor; and

"e. transmit the Hazard Summary Report and comments by the Division of Civilian Application to the appropriate Assistant General Manager with a recommendation concerning authorization of construction or operation of the reactor.*

3 The Director, Division of Civilian Application, shall:

"a. develop health and safety standards, guides, and codes, for the design, operation, supervision, containment, and location of all reactors, both AEC and privately owned;

"b. receive and evaluate all Hazard Summary Reports (submitted in accordance with 8401-032 (c) and AEC Regulation 10 CFR 50, 'Licensing of Production and Utilization Facilities,') with regard to design, operation, supervision, containment, location, and all other factors affecting health and safety;

"c. obtain such additional information as is needed to carry out such an evaluation by formal request to the appropriate Division Director in the case of AEC reactors and to the licensee or license applicant in the case of privately owned reactors;

"d. obtain advice and assistance as may be needed from such sources as AEC or AEC contractor personnel, private consultants and the Advisory Committee on Reactor Safeguards (See Appendix 8401-033 for charter for Advisory Committee on Reactor Safeguards);

"e. for AEC reactor, furnish the appropriate Division Director with the results of the hazard evaluation together with recommendations concerning the advisability (from a safety standpoint) of proceeding with the proposal and such specific comments on the safety of the reactors as are deemed appropriate; and

* * *

"*034 Manager of Operations, in developing and administering the programs under their jurisdiction, are responsible for the safe operation of AEC-owned reactors under their supervision. Specifically, they shall:

"a. apply the AEC reactor safety standards, guides and codes to reactor facilities under their jurisdiction;

"b. obtain from the contractor a Hazard Summary Report for each new reactor or each significant modification of an existing reactor; and

"c. review this report for completeness and adequacy, work out modifications and improvements with the contractor and submit 20 copies, together with pertinent comments, evaluations and recommendations to the operating division responsible for the program.*

"*8401-04 Hazard Summary Report

"Information to be included in a Hazard Summary Report is covered in Appendix 8401-04.*

ID CHAPTER 8401 REACTOR SAFETY DETERMINATION

"8401-01 Purpose and Scope:

"This issuance supplements AEC Chapter 8401 by establishing responsibilities for IDO and its contractors in regard to reactor safety determinations.

Annex G/9

70593 O—61——6

'8401-02 Responsibilities:

"021 The Directors of Operations and Military Reactors Divisions, IDO, are responsible for: -

"(a) The safe operation of and the application of AEC reactor safety standards, guides and codes to reactors under their supervision.

"(b) Obtaining from the contractor a Hazard Summary Report for each new reactor and each significant modification of an existing reactor.

"(c) Determining when modifications are of sufficient magnitude to require a Hazard Summary Report.

"(d) Procuring staff assistance and comments from Health and Safety Division concerning the Hazards Summary Report.

"(e) Reviewing each Hazard Report for completeness and adequacy and working out modifications and improvements with the Contractor in accordance with 10 CFR 50.34.

"(f) Recommending approval and preparing for submittal twenty copies of each Hazard Report to the Division of Reactor Development sixty days in advance of initial criticality of the new or modified reactor reported on.

"022 The Contractor is responsible for:

"(a) Providing IDO with a Hazard Summary Report ninety days in advance of initial criticality for each new or significantly modified reactor. The report is to conform to 10 CFR 50.34 and is also to include an evaluation of the maximum credible accident."

2. Advisory Committee on Reactor Safeguards

The ACRS is established by Section 29 of the Atomic Energy Act of 1954, as amended, that section requiring that the ACRS "...shall... review studies and facility license applications referred to it and make reports thereon, advise the Commission with regard to the hazards of proposed or existing reactor facilities and the adequacy of proposed reactor safety standards, and perform such other duties as the Commission may request".

3. Argonne National Laboratory (University of Chicago)

Argonne's activities with respect to the SL-1 (then the ALPR) were a part of the overall contractual obligation of the University of Chicago to the Atomic Energy Commission. No specific terms relating to the operation of the SL-1 reactor were included.

4. Combustion Engineering, Inc.

While Combustion Engineering, Inc. (CEI), was not involved in the design, construction, or initial operation of the SL-1 Reactor, CEI was involved with the later operation of the reactor, in

modifications to the reactor facility, and the continuation of training of military personnel. The responsibilities assigned to CEI are delineated in detail in Article II, Statement of Work, and Article XXI, Safety, Health and Fire Protection, and in each of the four subsequent modifications of Contract No. AT (10-1)-967, between AEC and CEI, as follows:

Modification No. 4 (Cont'd)
Supplemental Agreement
Contract No. AT(10-1)-967

Article III - STATEMENT OF WORK (Cont'd)

M. Disclaimer. The Commission makes no warranty or representation as to the quality, safe condition, working condition, state of repair or adequacy (for the purpose of the work or otherwise) of any premises or item of equipment of material of any kind coming into the possession or control of the Contractor or to be used by it in the performance of the work.

Article XXI - SAFETY, HEALTH AND FIRE PROTECTION

The Contractor shall take all reasonable precautions in the performance of the work to protect the health and safety of employees and of members of the public and to minimize danger from all hazards to life and property, and shall comply with all health, safety, and fire protection regulations and requirements (including reporting requirements) of the Commission. In the

event that the Contractor fails to comply with said regulations or requirements of the Commission, the Contracting Officer may, without prejudice to any other legal or contractual rights of the Commission, issue an order stopping all or any part of the work; thereafter a start order for resumption of work may be issued at the discretion of the Contracting Officer. The Contractor shall make no claim for an extension of time or for compensation or damages by reason of or in connection with such work stoppage.

ANNEX H

CHRONOLOGY OF PLANT OPERATION

Attached is a chart of energy produced by the SL-1 versus time. Test periods, criticality experiments, planned and unscheduled shutdowns and reasons are indicated on the chart and the legend.

Also attached is a chronological summary of events which occurred during operation. This summary covers the period February 5, 1959, when Combustion Engineering began operating the plant, to January 3, 1961.

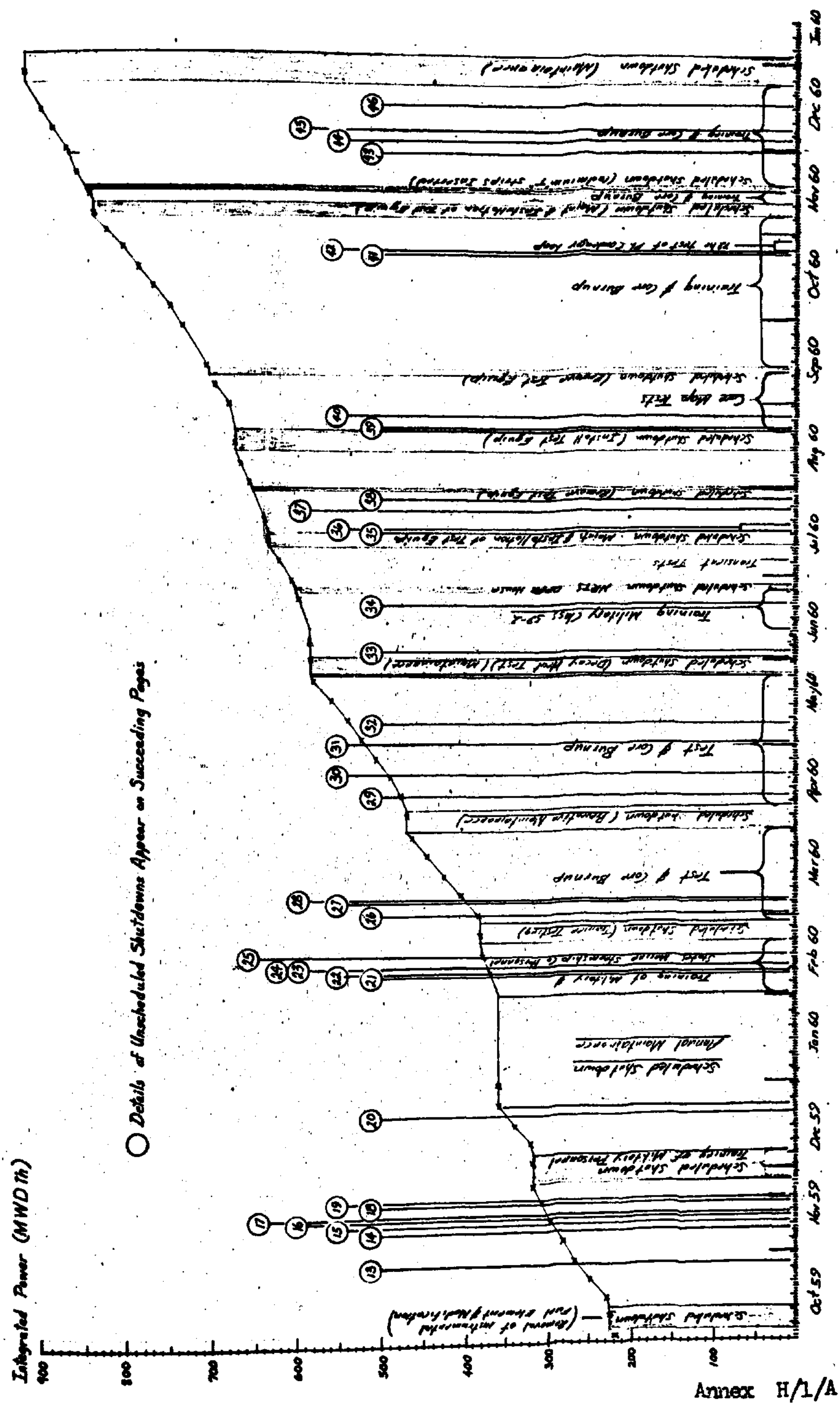
Integrated Power (MWDTh)
Details of Unscheduled Shutdowns Appear on Succeeding Pages
900
800
700
600
500
400
300
200
100
Oct 59
Nov 59
Dec 59
Jan 60
Feb 60
Mar 60
Apr 60
May 60
Jun 60
Jul 60
Aug 60
Sep 60
Oct 60
Nov 60
Dec 60
Jan 61
Scheduled Shutdown
Annual Maintenance
Test of Core Burnup
Training of Core Burnup
Transient Tests

Annex H/1/A

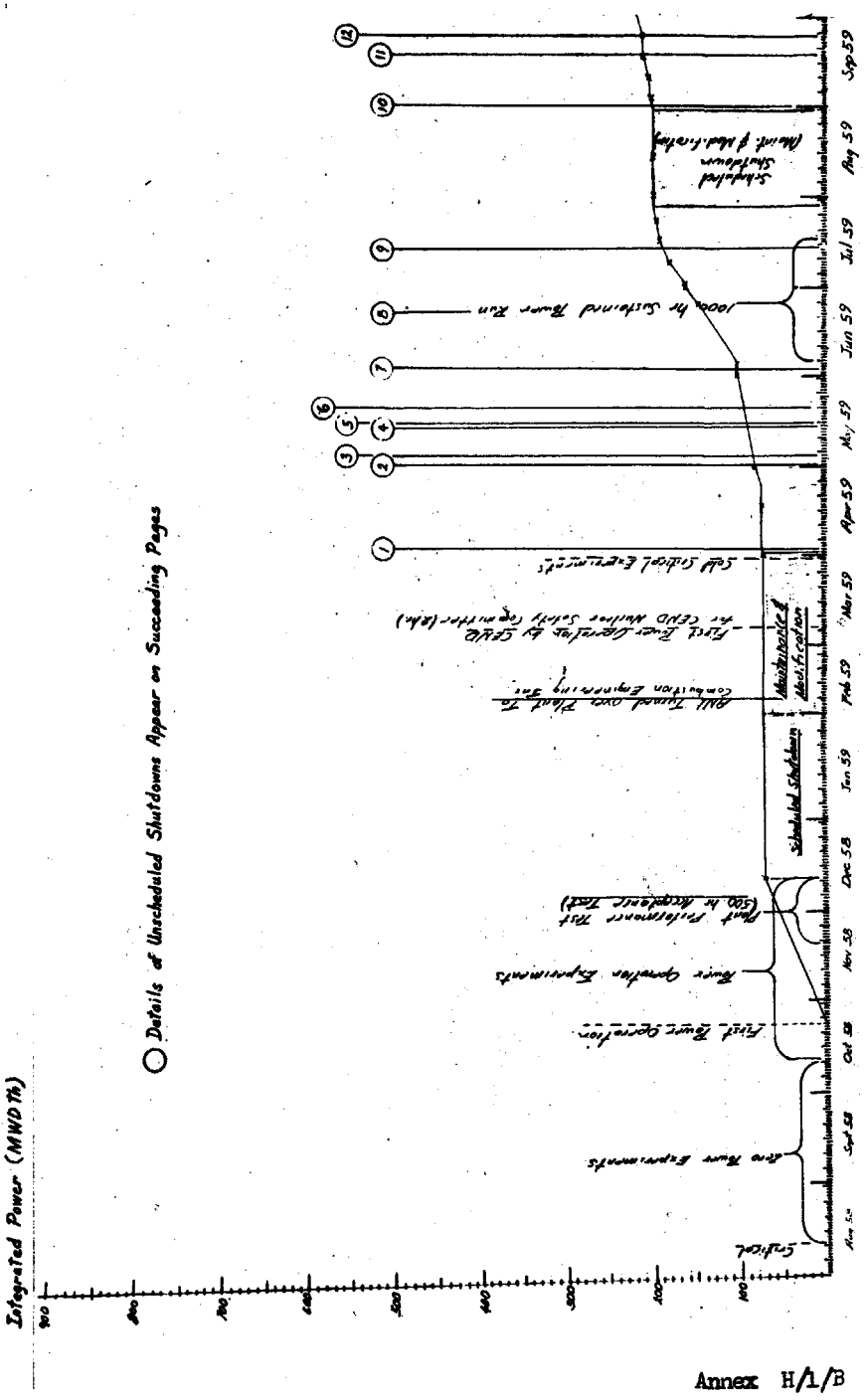
Integrated Power (MWDTh)
900
800
700
600
500
400
300
200
100
Details of Unscheduled Shutdowns Appear on Succeeding Pages
Initial
Zero Power Experiments
First Power Operation
Power Operation Experiments
Plant Preliminary Test
(500 hr Acceptance Test)
Scheduled Shutdown
All Tested Oxy Fluid To
Combustion Engineering Inc
Maintenance & Modification
First Power Operation by SELG
Minor Safety Operation (Rh)
Cold Critical Experiments
1000 hr Sustained Power Run
Scheduled
Shutdown
(Maint. & Modification)
Nov 58
Dec 58
Jan 59
Feb 59
Mar 59
Apr 59
May 59
Jun 59
Jul 59
Aug 59
Sep 59

Annex H/1/B

DETAILS OF UNSCHEDULED SHUTDOWNS

1. A routine check on the head gasket vapor leak-off line revealed the failure of the head gasket. The apparent cause was suspected to be due to a faulty gasket or improper gasket seating. The plant operation was continued to determine if the inner gasket would reseal itself. After 10 hours of operation the gasket still leaked and it was decided to secure the plant and replace the gasket.

2. When the reactor was shutdown at the end of a five day period of operation, the rods were all dropped individually from 30 inches under hot conditions. Rod #7 hung up at approximately four inches. The apparent cause of the rod failure was suspected to be binding in the rod seal or back up roller. On May 4, 1959, when the plant was started up again, the hot rod drop test on rod #7 was repeated. The rod showed no signs of sticking during this test so the reactor was brought up to power for a five day run.

3. On May 4, a steam leak developed in the purification system while the reactor was at power. The reactor was secured and the leak isolated. Health Physics detection procedures were followed and the contaminated area cleaned. Plant operation was resumed on May 5 after a downtime of eight hours.

4. & 5. The reactor was secured for one shift on May 14th and one shift on May 15th, because of loss of vacuum in the gland ejector system. The reactor was shut down on May 18th while the gland air ejector was repaired. A discussion of the maintenance activities performed on the gland ejector system may be found on page 6*. Plant downtime totaled 61 hours.

6. On May 20, control rod drive #7 failed to meet the hot rod drop time requirement of two seconds for 30 inches travel. Following a preliminary investigation of causes for sticking, the plant was secured and the mechanism was replaced. Details of the replacement sequence are presented on page 7* Plant downtime totaled 22 hours.

7. Main condenser fan motor tripped out causing the reactor to scram due to main condenser high pressure. Apparent cause was a short circuit in one phase of the motor stator. Attempts were made to reset the motor thermal overload; failure of this action necessitated orderly shutdown of the plant.

8. The 1000 hour sustained power run which started on June 5 was completed on July 17. During this time steam was generated by the reactor for approximately 99.5% of the time. There were, however, four brief occasions when the plant

* Operating Plant Log

was not generating steam. Two were due to accidental scrams which could have been prevented and one was a planned test to obtain operational data. There was only one shutdown required for repairing three leaking valves that prevented the plant from generating steam for a period of 75 minutes.

M/R #5
7/14/59

9. The primary reactor water level recorder stuck at -1 inch causing the feedwater valve to close allowing the hotwell to fill and give a hotwell high level alarm. The cause was tube failure in the Hayes liquid level indicator. Replacing these tubes will scram the reactor. In an attempt to place a jumper across the scram contactors, the reactor was accidentally scrammed.

M/R #6
8/31/59

10. Condensate in the lire started leaking from the air cooled after condenser. The apparent causes were damaged gaskets and a small leak in the cooling coils. The air ejectors were secured, the reactor "bottled up" and maintained at 300 psi pressure and the condenser was removed for repairs.

M/R #7
9/18/59

11. At 1140 hours on September 18, 1959, an attempt was made to start the purification pump. No suction could be obtained on the pump. The suction line for the purification pump terminates in the reactor vessel at a level that is

approximately at the mid-plane of the reactor core. With the purification pump in operation and with the present piping arrangement in the purification and retention tank systems, it is possible to pump water out of the reactor and into the retention tank. The water level in the retention tank was checked and was observed to be nearly full. This tank is normally kept at less than one-half full. It was concluded that water from the reactor was pumped into the retention tank lowering the reactor water level to about 11" below the top of the core. All valves were in proper positions when checked after this incident. Any one of six valves to the retention tank could have been opened or partially opened during operation of the purification system allowing reactor water to be removed from the pressure vessel. The following steps were completed after it was determined that the reactor water level was low: (1) Plant instrumentation was turned on. (2) Radiation readings were taken above the reactor vessel. These ranged from .9 to 5 r/hr.(3) A control rod plug was removed from the reactor head and from a distance two hoses were inserted into the plug opening. (4) Water was added to reactor vessel and the level returned to normal. (5) Background readings of about 20 mr/hr were recorded. (6) Radiation readings were taken at the opening in the reactor head as water was added.

From this data it was determined that the radiation level at the head opening was 1000 r/hr when the water was at its lowest point. (7) Film badges were collected for immediate processing. There were no overexposures.

M/R #8
9/24/59

12. At 0238 hours the reactor scrammed. The apparent cause was an electrical transient in Channel I that caused the needle in the power level circuit to deflect up-scale and strike the scram actuating contractor. There was no permanent indication for the cause of this transient. As there was no permanent indication of trouble following the first scram, the plant was returned to power. After the second scram, the plant was isolated by proper valving to retain pressure and Channel I power supply was removed for repairs.

13. On October 27 there was no steam flow for a fifteen minute period while a valve gasket was replaced. The plant was maintained at 300 psig while the repair was made.

M/R #9
10/9/59

14. The nuclear instrument ventilating air fan was being installed and a wire was shorted to ground, blowing fuse L-3. Fuse L-3 also supplies power to the control rod clutches. This caused the control rods to drop to zero inches. Replaced L-3 fuse and returned reactor to power.

M/R #11
10/11/59
15. A - The isolation valves for the reactor steam and the main steam pressure gages were leaking sufficiently to require repairs. The apparent cause was damaged asbestos gaskets. The main steam gage valve is downstream from the main steam valve MS-1. The reactor was maintained at temperature and pressure with MS-1 closed while the asbestos gasket was replaced.

B - The isolation valves for the reactor steam and the main steam pressure gages were leaking sufficiently to require repairs. The apparent cause was damaged asbestos gaskets. The reactor gage valve is upstream from the main steam valve MS-1 and its repair requires being at atmospheric pressure. The plant was blown down to atmosphere and the ring sheet asbestos gasket replaced.

M/R #12
10/18/59
16. Normal procedures call for securing the reactor venting valve when reaching temperature and pressure prior to passing steam. In attempting to secure this one-inch stainless steel globe valve it was found to be frozen open. Reactor pressure was reduced to atmospheric and the valve removed for inspection.

17. On November 14 plant startup was delayed nine hours and ten minutes while the primary side of the simulated heat load heat exchanger was thawed out. This unit froze when the secondary coolant, which contains anti-freeze protection, cooled to less than 32° F and froze the condensate in the primary side of the heat exchanger.

M/R #13
10/18/59

18. The main steam inlet isolation valve for steam trap #1 was leaking sufficiently to require immediate repair. The main steam stop valve (MS-1) was closed to bottle up the reactor vessel at 300 psig while the bonnet gasket on the inlet valve for steam trap #1 was replaced.

M/R #12
10/19/59-A
10/20/59-B

19. Continued oscillations in the main condenser vacuum were traced to the controlling action of the turbine governor. The apparent cause was originally thought to be a sticking valve stem in the turbine governor throttle valve. It was later determined that the cause was in the governor unit. The reactor was bottled up at 300 psig and the turbine governor throttle valve was removed and the stem was found bent. A temporary repair was made by polishing the stem and reaming the valve bushing.

Continued oscillations in the main condenser vacuum were traced to the controlling action of the turbine governor. The apparent cause was originally thought to be a sticking valve stem in the turbine governor throttle valve. It was later determined that the cause was in the governor unit. When the governor oscillations persisted the governor oil was changed and the compensating adjustments reset in accordance with the recommended 500 hour maintenance requirements.

M/R #14
12/29/59

20. Operator error; the wrong fuse was pulled. The three power lines to the bus tie breaker are individually fused. One of these fused lines (NA) also supplies power to the turbine generator lock out relay. While attempting to check the fuses, NA was inadvertently pulled causing loss of power to the lock out relay. The turbine throttle then tripped shut and caused the reactor to scram upon loss of control power.

M/R #15
2/8/60

21. Electrical - Defective Station Auxiliaries, Circuit Breaker. The Station Auxiliaries Circuit Breaker kicked out stopping the feedwater pump, condenser fan, and related equipment. The breaker could not be reset immediately because of residual

heat in tripping mechanism. The dummy load was dropped from the turbine generator and an attempt was made to parallel with Idaho Power when the reactor scrammed.

M/R #16
2/9/60
22. The high voltage power cable for Channel II shorted causing the reactor to scram. The cable was replaced.

M/R #17
2/11/60
23. An operator in training had started the turbine generator following normal startup procedures while supervised by a qualified plant operator. As the turbine was being loaded in 60 KW increments the steam throttle tripped shut causing loss of all electrical power and scramming the reactor when the turbine generator was loaded to approximately 50%.

M/R #18
2/11/60
24. The control room rod #7 position indicator showed rod #7 stuck at 10.6 in. following a reactor scram. Investigation revealed the negator spring had unwound from the rewind spool and as the rod dropped, the loose spring disengaged the position indicating selsyn gear train rendering the selsyn and the motor drive micro switches inoperative. The rod bottomed on the dampening springs but the drive motor continued to drive in, as in a stuck rod condition, shearing the pinion shaft key.

70593 O—61——7

M/R #19
2/15/60

25. Channel II, the linear power scram circuit, was not functioning properly. There was no signal to Channel II. The trouble was traced to a shorted signal cable from the detection chamber to the amplifier.

M/R #20
3/1/60

26. At approximately 0700, March 1, 1960, main condenser pressure started to increase and the cause could not be located. By 0800 low main condenser vacuum started to affect turbine operation and in attempting to switch the plant electrical load from the SL-1 turbine to Idaho Power, by paralleling, the turbine tripped due to overspeed and the reactor scrammed at 0822.

M/R #21
3/5/60

27. The station auxiliaries breaker tripped out and before the condenser fan could be successfully returned to operation, the reactor scrammed from high condenser pressure. The station auxiliaries breaker was reset and the vessel was bottled up at 300 psig while the reactor was returned to power.

M/R #22
3/6/60

28. The turbine governor failed to regulate at full power operation

Low generator frequency resulted effecting the feedwater control circuit. The feedwater valve opened but the pump discharged dropped due to low frequency and under voltage. When the generator recovered the feed pump immediately passed in excess of 1000#/hr through the open feedwater valve. A cold water transient followed scramming the reactor at 4.5 MW(t) on high flux Channels I and II. The reactor was returned to operation at 80%/full power.

M/R #23
4/12/60

29. Reactor scrammed during normal operation from a false high water level. Analysis of recorded operating data following the scram indicates that the reactor water level indicator drove high (off scale) instantaneously, causing the scram. Its operation before and after the malfunction appears normal. The reactor was secured at pressure and a normal re-startup followed.

M/R #24
4/20/60

30. At 2200, April 20, 1960, the canned rotor purification pump failed and could not be restarted. The purification system was secured and the pump tagged out. As the reactor water quality was good, it was not necessary to immediately secure the reactor and plant.

M/R #25
5/1/60

31. The station auxiliary breaker which supplies electrical power to all plant auxiliaries tripped. The time delay required before the breaker could be reset allowed condenser pressure to increase 5 psia automatically scramming the reactor at 0103 hours. The plant was secured with the reactor at pressure. The station auxiliary breaker was reset and a normal hot startup performed.

M/R #26
5/8/60

32. The station auxiliary breaker which supplies electrical power to all plant auxiliaries tripped. The time delay required before the breaker could be reset allowed condenser pressure to increase 5 psia, automatically scramming at 2110 hours. The plant was secured with the reactor at pressure. The station auxiliary breaker was reset and a normal hot startup performed.

M/R #27
6/3/60

33. The lower screen in the mixed bed resin container ruptured. It was discovered when resin from the mixed bed column plugged the feedwater filter. The resin was cleaned out of the system (the resin was approximately 15 mr) and the mixed bed column was changed to mixed bed resin and an attempt was made to return the reactor water to operating quality.

M/R #28
6/20/60

34. During a military training period the steam supply was reduced to the turbine and caused a fluctuating power output from the generator. Fuses blew in a voltage regulator and in the power supply to Nuclear Channel I and Channel IV. The reactor scrammed from loss of power to Channel I. The fuse was replaced and a normal hot startup performed.

M/R #29
7/16/60

35. Steam was visually observed blowing into the operating floor from under the reactor for shielding. The reactor was scrammed, the shielding was removed, and the vessel head was inspected to determine the origin of the leak. Water from a leak in No. 5 control rod drive seal appeared to have saturated the reactor head insulation and reactor heat was generating the steam. The water leak was repaired and the reactor was returned to temperature and pressure to check for additional leaks. Water leaks were found at the inlet and outlet cooling water fittings to Control Rod No. 7. A steam leak was observed in the Control Rod #7 rod drive housing. The leaking swaglock fittings were replaced and the Control Rod #7 drive housing was replaced.

M/R #30
7/16-18/60

36. During startup the reactor was scrammed on five separate occasions from abnormal operation of Nuclear Channel No. 1. Following each scram, all components of the channel were inspected to locate the source of the spurious signal. The trouble could not be located and the channel was returned to the scram circuit.

M/R #31
7/24/60

37. Steam was visually observed blowing into the operating floor from under the reactor top shielding. The reactor was scrammed and the top shielding was removed to determine the location of the leak. Steam was found leaking from No. 3, No. 7 and No. 9 control rod seals. A rubber "O" ring and a neoprene shaft seal was replaced on the leaking control rod gland seal housing units.

M/R #32
7/28/60

38. A scram was caused by a reactor high water level. The high water level immediately corrected itself so the reactor was returned to power after a normal startup.

M/R #33
8/22/60

39. Steam leaks developed in three original welds in the main steam system. Water leaks were found in two screwed fittings

on the reactor water lines to the purification shutdown cooler. The reactor was scrammed to repair the leaks.

M/R #34
8/26/60

40. Prior to 0247 hours August 26, 1960, a large quantity of used nuclear grade resin was added to the hotwell. The exact method or time that the resin was added to the hotwell has not yet been determined.

40A. On Oct. 24, 1960, the reactor was accidentally scrammed while connecting PL scram signal to the reactor scram circuit.

M/R #35
9/25/60

41. The breaker on the condenser fan tripped and would not reset. The breaker apparently overheated. Upon loss of the fan, the condenser pressurized and the reactor scrammed. The breaker was reset and the reactor was returned to power.

41A. The reactor was secured for six hours when the plant operator became incapacitated and could not be immediately replaced.

M/R #36
12/3/60

42. As outside ambient temperature decreased, the main air condenser mixer and exhaust dampers automatically adjusted to maintain a 40° F inlet air temperature. The exhaust dampers slipped on the motor drive shaft and shut, resulting in high condenser temperature and pressure. The operator immediately

reduced steam flow to prevent an automatic scram due to condenser high pressure. As steam flow was reduced reactor pressure increased and the plant scrammed automatically at 325 psig. Normal shutdown procedure was followed. The exhaust dampers were temporarily locked at the desired position and a routine startup performed.

M/R #37
12/7/60

43. During a normal plant check, the condenser circulating pump motor was found to be overheated and before it could be secured the motor shorted and stopped.

M/R #38
12/16/60

44. The utility bus breaker supplying power to the motor control center tripped, causing loss of the main condenser fan. Before steam flow could be reduced the main condenser became pressurized and automatically scrammed the reactor.

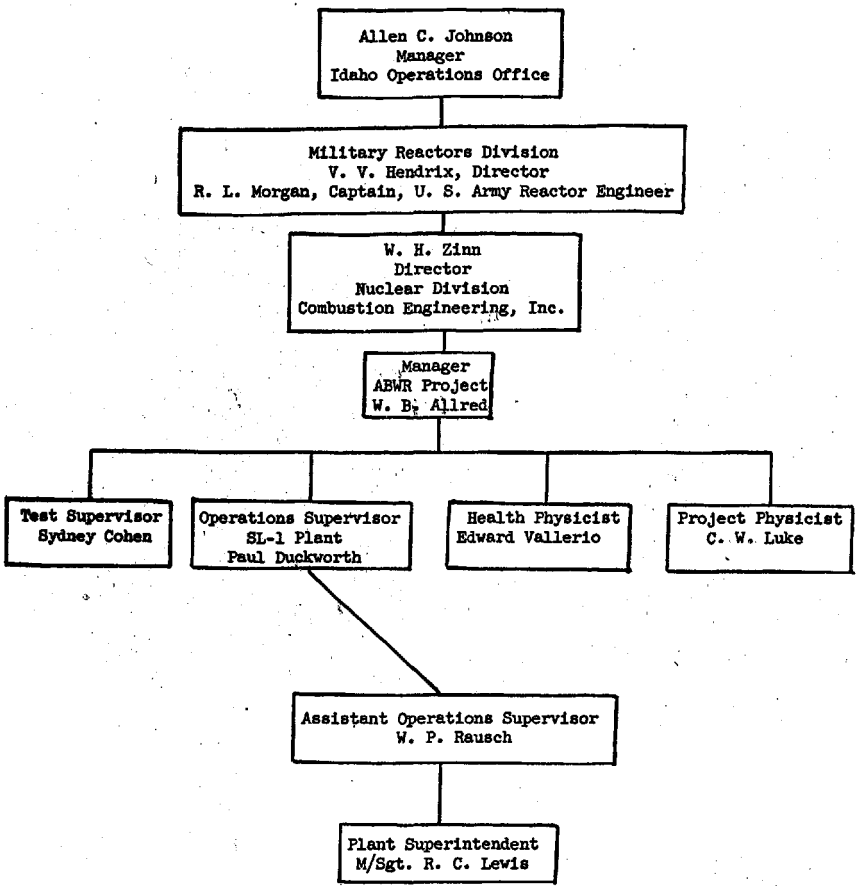
Allen C. Johnson
Manager
Idaho Operations Office
Military Reactors Division
V. V. Hendrix, Director
R. L. Morgan, Captain, U. S. Army Reactor Engineer
W. H. Zinn
Director
Nuclear Division
Combustion Engineering, Inc.
Manager
ABWR Project
W. B. Allred
Test Supervisor
Sydney Cohen
Operations Supervisor
SL-1 Plant
Paul Duckworth
Health Physicist
Edward Vallerio
Project Physicist
C. W. Luke
Assistant Operations Supervisor
W. P. Rausch
Plant Superintendent
M/Sgt. R. C. Lewis

Annex I

OPERATIONS LOG HISTORY OF CONTROL ROD NO. 1

DATE	Sept 3	Sept 11	Sept 11	Oct. 17	Nov. 20	Nov. 20	Nov. 27	Nov. 29	Dec. 7	Dec. 19	Dec. 19	Dec. 19	Dec. 19	Dec. 19	Dec. 19	Dec. 19	Dec. 20	Dec. 22	Dec. 23	Dec. 23	Dec. 23
HOUR	1035	1320	1448	1015	0120	1219	0924	0240	1022	1005	1328	1349	1352	2330	2330	2330	1930	0449	0825	0835	0835
Dropped or Raised from	18.0	20	20	18	20	22	20	17	19.4	20	25	16	16	30	29	28	30	30	19.35	16	9
Stopped At	18.0-3/8		10	16		0	20	15	0.4	20	25	16	0	30	29	0	25.2	0	19.35	9	0
Hung Momentarily At (And Then Dropped)					21.6																
Was Driven to Before Freeing	11.5			18			16	12	0	28							0		16		0
Total Drop Time (Seconds)													19			1.13				1.3	
See Note Number (Below)		1			2	3	7			4	5							6			
Power Level (MW)	2.1	0	0	2.7	2.89	3.0	2.65	0	3.0	3.06	3.27	0	0	0	0	0			0	0	0
Rod Coolant Flow (GPH)	120	180	180	120	110	120	100	100	100	100	100	100	100	20	20	20					

NOTES:

1. Rod Stuck and would not drive in or out w/180 GPH coolant flow. Dropped when coolant was secured.
2. Stuck momentarily and then continued driving out to 22"
3. Rod dropped "part way," stuck, then dropped to zero
4. Had to drive rod out with a pipe wrench
5. Would not drop at all on selected rod drop
6. Operated jerkily below 3"
7. See "scram" log in 1960 Power History Book

OPERATIONS LOG HISTORY OF CONTROL ROD NO. 3

DATE	DEC. 19	DEC. 19	DEC. 19	DEC. 23	DEC. 23
HOUR	1333	1350	2330	0825	0835
Dropped or Raised from	25	16	30	19.35	9
Stopped At	25	0	0	18.85	0
Hung Momentarily At:			6		
Was Driven To Before Freeing	16			9	
Total Drop Time		1.22	1.185		0.5
See Note Number (Below)					
Power Level (MW)	3.26	0	0	0	0
Rod Coolant Flow (GPH)	100	100	20		

OPERATIONS LOG HISTORY OF CONTROL ROD NO. 5

DATE	Sept 11	Sept 11	Nov. 15	Nov. 19	Nov. 20	Dec. 3	Dec. 17	Dec. 19	Dec. 19	Dec. 19	Dec. 22	Dec. 23
HOUR	1400	1448	0255	1020	1219	0114	1130	1005	1328	1349	0449	0825
Dropped or Raised from	18	18	16.5	19.4	22.	0	20	20	25	16		19.35
Stopped At	18	10	16.5			5.5	20	20	25	0		0
Hung Momentarily At:												
Was Driven To (Before Freeing)		0										
Total Drop Time										.52		.82
See Note Number (Below)	1		2	3	4	5	6	7			8	
Power Level (MW)	0	0	2.71	2.8	2.95	0	3.08	3.06	0	0		0
Rod Coolant Flow (GPH)	180	180	80	120	120	100	115	120	100	100		

NOTES:

1. Would Not Drop At 180 GPH Flow, dropped clean with 0 flow.
2. Would not drive out electrically
3. Stuck on drive out
4. Dropped part way, stuck, then dropped to 0
5. Stuck while being driven out. Had to be forced by hand.
6. Had to be driven out by hand
7. Would not drive on drive out. Had to use pipe wrench.
8. Operated jerkily above 26.7"

OPERATIONS LOG HISTORY OF CONTROL ROD NO. 7

DATE	Sept 11	Nov. 12	Nov. 18	Nov. 18	Nov. 19	Nov. 20	Nov. 20	Nov. 20	Nov. 27	Nov. 27	Nov. 24	Dec. 3	Dec. 7	Dec. 7	Dec. 12	Dec. 14	Dec. 20	Dec. 22	Dec. 23
HOUR	1448	1530	1005	1005	1020	0120	1219	1219	0924	1720	0240	0114	0110	1022	1630	1328	0025	0449	0825
Dropped or Raised From	20	0	19	2	19.3	20.0	22.0	3	20	19.3	17	19.5	19.1	19.4	19.2	25	30		19.35
Stopped At	10	2	2	2	19.3	22.0	3	0	20	3	15	2.8	0	1	3	25	0		19.35
Hung Momentarily At (And then Dropped or Raised)			7			21.0													
Was Driven To Before Freeing	0			0					0	0	14.4	0		0	0	16			0
Total Drop Time (Seconds)							6.965	2					3.39				1.71		
See Note Below (Number)		1			2				4									3	
Power Level (MW)	0	0	2.7	2.7	2.8	2.89	3.0	3.0	2.65	2.65	0	0	2.87	3.0	2.5	?			0
Rod Coolant Flow (GPM)	180		100	100	120	110	120	120	100	100	100	100	100	100	100	?			

1. After it was freed, it moved smoothly.
2. Stuck on drive out on rod exercise.
3. Operated jerkily below 3 inches.
4. See "Scram" log in 1960 Power History Book.

OPERATIONS LOG HISTORY OF CONTROL ROD NO. 9

DATE	Oct. 7	Oct. 8	Oct. 8	Oct. 11	Oct. 15	Nov. 4	Nov. 6	Nov. 7	Nov. 11	Nov. 17	Nov. 27	Nov. 27
HOUR	2136	0258	0327	1728	1921	0525	1600	0430	0001	0050	0924	1720
Dropped or Raised from											18.2	18.5
Stopped At											0	0
Hung Momentarily And Then Dropped											18.2	
Was Driven To Before Freeing												
Total Drop Time (Seconds)												1.28
See Note Below	1	2	3	4	5	6	7	8	9	10		
Power Level (MW)							0					2.65
Rod Coolant Flow (GPH)							0					100

1. Dropped out of Automatic
2. Drove out to 18" and P-Po went to +15 PSIG. Drove in Manually
3. Started driving out again. Put it in manual.
4. Overshooting ± .3 for two swings.
5. Would not drive down in auto to take off for load loss.
6. Drove out of auto (18").
7. Could not get nut off of the top of rod.
8. Nut cannot be removed unless heat is applied.
9. Will not go into auto - broken cap on control cable.
10. Jumped out of auto.

ANNEX K

MALFUNCTION REPORTS

On June 3, 1959, in a letter from V. V. Hendrix to W. B. Allred, C.E. I. was instructed to submit reports on incidents in accord with the following criteria as of June 5, 1959. The company was to submit reports on previous incidents concerning the pressure vessel gasket leak; air ejector problems; Rod #7 malfunction and condenser fan motor failure.

Criteria for Reporting Malfunctions

1. An occurrence resulting in a reactor accident or physical damage to the core or primary plant components.

2. An equipment failure which causes a reactor scram or plant shutdown.

3. Repeated failure of equipment to remain in adjustment.

4. An overexposure of personnel to radiation in excess of established tolerances.

5. A fire or normal industrial accident that affects power plant operation.

SL-1 Malfunction Reports

	Date - Time		Malfunction
1.	4/2/59 (7/27/59)1/	2:00 pm Canfield2/	The inner gasket on the reactor vessel failed.
2.	5/1/59 (7/27/59)	8:25 pm Canfield	Rod #7 stuck under full free fall conditions at temperature and pressure.
3.	5/14/59 (7/27/59	12:00 noon Rausch	Failure of gland ejection leak off system to maintain a vacuum.

1/ Dates in parenthesis are dates of report.

2/ Names represent persons who submitted report. Underlined names represent members of the Cadre.

	Date	- Time	Malfunction
4.	6/2/59 (7/27/59)	10:47 am Rausch	Loss of power to main condenser fan motor.
5.	7/14/59 (7/27/59)	10:00 pm Crudele	Electronic - Bad vacuum tubes in the Hayes Liquid level indicator.
6.	8/31/59 (9/1/59)	11:45 pm Crudele	Condensate in the line started leaking from the air cooler after condenser. The apparent causes were damaged gaskets and a small leak in the cooling coils.
7.	9/18/59 (9/22/59)	11:40 pm Crudele	The reactor water vessel was estimated to be about 11" below the top of the core, causing the radiation level above the reactor vessel to increase to about 5 R/hr
8.	9/24/59 (9/30/59)	2:38 am 7:07 am Crudele	Electronic failure - The power supply in the Channel I linear power level circuit failed.
9.	11/9/59 (11/19/59)	11:17 pm Crudele, J.S.	Fuse L-3 blew removing power from the control rod clutches.
10.	11/13/59 (11/17/59)	2:30 am Rausch	Mechanical failure of reactor venting valve.
11.	11/11/59 (11/17/59)	6:17am 10:20 am Rausch	A & B - Mechanical failure of steam valve bonnet packing.
12.	11/19/59 11/20/59 (11/30/59)	12:57 pm 9:45 am Canfield	Mechanical failure - turbine governor failed to control governor.
13.	11/18/59 (12/2/59)	11:30 pm Canfield	Mechanical failure - Excessive steam leakage of steam valve bonnet packing.
14.	12/20/59 (12/20/59)	9:45 am Feil	Operator error - wrong fuse was pulled.

	Date - Time		Malfunction
15.	2/8/60 (2/8/60)	2:43 am Curran	Electrical - Defective Station Auxiliaries Circuit breaker.
16.	2/9/60 (2/9/60)	9:00 pm Lewis	Loss of Power (high voltage) on Channel II (Safety Channel) shorted cable.
17.	2/11/60 (2/11/60)	7:20 am Rausch	Not determined at time of report.
18.	2/11/60 (2/11/60)	7:20 am Canfield	The negator spring for Rod #7 unwound from the negator rewind spool causing damage to the rod drive mechanism.
19.	2/15/60 (2/18/60)	10:40 am Canfield	Electronic - Channel II, the linear power scram circuit, was not functioning properly.
20.	3/1/60 (3/1/60)	8:22 am Hobson	Design failure.
21.	3/5/60 (3/5/60)	8:40 am Hobson	Electrical - The design auxiliaries breaker tripped out resulting in a reactor scram.
22.	3/6/60 (3/7/60)	1:35 am Bishop	Mechanical - failure of turbine governor valve to regulate at full power.
23.	4/12/60 (4/14/60)	10:50 pm Rausch	Reactor scrammed during normal operations from a false high water level. Analysis of recorded operating data following scram indicates that the reactor water level indicator drove high (off scale) instantaneously causing the scram. Its operation before and after the malfunction appears normal.
24.	4/20/60 (4/22/60)	10:00 pm Rausch	The canned rotor purification pumps failed and could not be restarted.

70593 O—61——8

	Date - Time		Malfunction
25.	5/1/60 (5/2/60)	12:58 am Rausch	The station auxiliary breaker which supplies electrical power to all plant auxiliaries tripped. The time delay required before the breaker could be reset allowed condenser pressure to increase 5 psia, automatically scramming the reactor at 1:03 am.
26.	5/8/60 (5/10/60)	9:02 pm Rausch	Same malfunction - reactor scrammed at 9:10 pm
27.	6/3/60 (6/6/60)	9:43 pm Canfield	The lower screen in the mixed bed resin container ruptured. It was discovered when resin from the mixed bed column plugged the feedwater filter.
28.	6/20/60 (6/20/60)	4:57 am Rausch	During a military training period, the steam supply was reduced to the turbine and caused a fluctuating power output from the generator. Fuses blew in a voltage regulator and in the power supply to nuclear Channel I and Channel IV. The reactor scrammed from loss of power to Channel I.
29.	7/16/60 (7/16/60)	5:59 am Rausch	During a normal plant startup, a steam leak was observed in the reactor top area. Water was leaking from No. 5 control rod seal housing and from No. 7 control rod inlet and outlet cooling water fittings. Steam was leaking from No. 7 control rod housing.
30.	7/16/60 7/17/60 7/18/60 (7/16/60)	4:15 am 3:05 am 10:00 am 11:45 am 7:30 am Rausch	During startup, the reactor was scrammed on five separate occasions from abnormal operation of Nuclear Channel I. Downtime in minutes - 5 - 5 - 10 - 10 - 3
31.	7/24/60 (7/26/60)	6:40 am Duckworth	After a plant startup following a training scram, steam was observed in the reactor top area. Seals on the gland water housing units of control rods

	Date - Time		Malfunction
			No. 3, No. 7 and No. 9 were leaking. The gland water seal housing on the three control rods were disassembled and the rubber "O" rings and Neoprene scales were replaced.
32.	7/28/60 (7/28/60)	3:55 am Duckworth	A scram was caused by a reactor high water level.
33.	8/22/60 (8/24/60)	10:45 pm Duckworth	Steam leaks developed in three original welds in the main steam system. Water leaks were found in two screwed fittings on the reactor water lines to the purification shutdown cooler.
34.	Prior to 8/26/60 (8/29/60)	2:47 am Duckworth	A large quantity of used nuclear grade resin was added to the hot-well by an undetermined method.
35.	10/25/60 (10/25/60)	5:43 am Duckworth	The breaker on the condenser fan tripped and would not reset. The breaker apparently overheated upon loss of the fan, the condenser pressurized and the reactor scrammed.
36.	12/3/60 (12/6/60)	1:14 am Rausch	As outside ambient temperatures decreased, the main air condenser mixer and exhaust dampers automatically adjusted to maintain a 40° F inlet air temperature. The exhaust dampers slipped on the motor drive shaft and shut resulting in high condenser temperature and pressure. The operator immediately reduced steam flow to prevent an automatic scram due to condenser high pressure. As steam flow was reduced, reactor pressure increased and the plant scrammed automatically at 335 psig.
37.	12/7/60 (12/8/60)	10:22 am Rausch	During a normal plant check, the condensate circulating pump motor was found to be overheated and before it could be secured, the motor shorted and stopped.

	Date - Time		Malfunction
38.	12/16/60 (12/19/60)	6:30 am Rausch	The utility bus breaker supplying power to the motor control center tripped causing loss of the main condenser fan. Before steam flow could be reduced, the main condenser became pressurized and automatically scrammed the reactor.

ANALYSIS BRANCH REPORT NO. 3 ON SL-1 INCIDENT
January 21, 1961

ANNEX L

SAMPLES TAKEN FROM SL-1 FOLLOWING INCIDENT FOR INDUCED ACTIVITY MEASUREMENT

Sample Description	Time of Analysis Date	Hour	Analyzed For	General Statement	Identification By	Data d/m	Remarks	Thermal Neutron Neutrons/cm^2 2100/1/3/61
Cigarette lighter screw taken from first body recovered	1/4/61	1900	Copper 64	Copper 64 found	Gamma spectra			9.3×10^9
Brass pin from film badge case recovered from second body	1/5/61	0300	Copper 64	Copper 64 found	Gamma spectra			
Brass watch band buckle from second body	1/5/61	0100	Copper 64	Copper 64 found	Gamma spectra Copper chemistry Decay curve		(total sample) (1/2 sample used)	1.8×10^{10} 2.1×10^{10}
Copper wire and screws from control room telephone	1/7/61		Copper 64	None found				
NAD dosimeter taken from SL-1 (No. 270) position at top of access stairway	1/4/61	1100						
(1) Bare gold foil	1/4/61	1100	Gold 198	Gold 198 found	Gamma spectra Decay curve	2.2×10^3		1.2×10^8
(2) Cadmium covered gold foil	1/4/61	1100	Gold 198	Gold 198 found	Gamma spectra	1.5×10^3		
(3) Sulfur pellet approx. 20 grams	1/12/61	1530	Phosphorus 32	Contaminated: Phosphorus separation made		3.6 ± 4.2		
(4) U-238, Pu-239, Np-237 fission foils	1/4/61	1600		No activity above background at time of counting				
(5) Chemical dosimeters for gamma dose	1/8/61	2200	Gamma dose		Cary spectrophotometer		Gamma dose: 840 Roentgens (IDO) 850 Roentgens (EGG)	

Sample Description	Time of Analysis Date	Hour	Analyzed For	General Statement	Identification By	Data d/m	Remarks	Thermal Neutron Neutrons/cm^2 2100/1/3/61
100 ml blood taken from first body	1/7/61	2200	Sodium 24	No sodium 24 identified	Gamma spectrum	< 5 d/m/ml		
Gold ring taken from third body recovered	1/10/61	1800	Gold 198	Gold 198 found	Gamma spectra	1.9×10^4 d/m	On 0.472 grams ring at 1830 1/10/61. 0.066 inch thick, 0.194 inch wide, 0.308 inch long.	9×10^8
Zipper pull and button from clothing of first body recovered	1/4/61	1200	Copper 64	None identified: highly contaminated with aged fission products				
Samples shaken from clothing of first two bodies recovered. Dissolved by R. Shank group at CPP and aliquot furnished for analysis								
(1) Metallic appearing sample (25 r/hr at 1 foot)	1/6/61 1/6/61	 0430	Uranium Strontium 91 On 10 ml aliquot	Mass spectro by R. Shank, CPP, Strontium 91 identified and estimate made	Spectra on yttrium 91m milked from strontium fraction	3.4 micro-grams per ml. 2.5×10^4 d/m/ml ± 50% at 2100/1/3/61	1.5×10^{18} fissions	
(2) Rock and gravel sample (20 r/hr at 1 foot)	1/6/61 1/6/61		Uranium Strontium 91 on 5 ml aliquot	Mass spectro by R. Shank, CPP Strontium 91 identified	Spectra on yttrium 91m milked from strontium fraction	3.9 micro-grams per ml		
Clothing sample from third body recovered. Dissolved at CPP.	1/10/61		Zirconium 97	No zirconium 97 identified				

Sample Description	Time of Analysis Date	Hour	Analyzed For	General Statement	Identification By	Data d/m	Remarks	Neutrons/cm^2 2100/1/3/61
Liver from first body recovered (1200 grams)	1/11/61	2330	Sodium 24	No sodium 24 identified	Gamma spectra	< 0.4 d/m/g		
			Sodium 23		Flame photometer		1.15 mg/g	
Liver from second body recovered (1570 grams)	1/11/61	2350	Sodium 24	No sodium 24 identified	Gamma spectra	< 0.3 d/m/g		
			Sodium 23		Flame photometer		0.95 mg/g	

Sample Description	Time of Analysis Date	Hour	Analyzed For	General Statement	Identification By	Remarks	Neutrons/cm^2 2100/1/3/61
Flexitallic gasket from SL-1 reactor	1/19/61	1200	Cobalt 58	Cobalt 58 found	Gamma spectra Cobalt chemistry	1.1 x 10^3 d/m/15 grams steel (nominally 18% chromium, 8% nickel)	2.5 x 10^{11} * (calculated by Burgus and Schuman.
	1/20/61	0830	Chromium 51	Chromium 51 found	Gamma spectra Chromium chemistry	2.0 x 10^3 d/m/15 grams steel (nominally 18% chromium, 8% nickel)	8 x 10^9 (calculated by Burgus and Schuman.
Mass assay of uranium from coveralls from third body	Reported by CPP to C. W. Sill					U-234 1.02% U-235 90.93% U-236 2.06% U-238 5.99%	
Mass assay of uranium from metal from clothing of victims	Reported by CPP to C. W. Sill					U-234 0.88% U-235 90.0 % U-236 2.73% U-238 6.39%	

* Fast neutrons.
Threshold at about 4 MeV for Ni-58 (n,p) Co^{58}.
Cross section taken as 90 millibarns.

MATERIALS TAKEN INTO SL-1 FOLLOWING INCIDENT FOR INDUCED ACTIVITY MEASUREMENT

Sample Description	Time of Analysis Date	Hour	Analyzed For	General Statement	Identification By	Remarks
Indium foil placed over reactor: sample not recovered from reactor						
Indium foils from neutron detectors in film badges placed on boom and net used to recover third body	1/9/61	0735	Indium 116	No activity found	Gross gamma counting	Detection limit is 1.2×10^5 neutrons/cm^2 for instantaneous burst, assuming no build-up time and no decay time following irradiation
NAD systems on boom and net during recovery of third body						
(1) Gold foils	1/9/61	0520	Gold 198	No activity found	Gross gamma counting	
(2) Chemical dosimeter from NAD 237	1/10/61	1400	Gamma dose			2000 roentgens (IDO)) 1700 roentgens (EGG)) In reactor compartment ca. 9 hours
(3) Chemical dosimeter from NAD 262	1/10/61	1400	Gamma dose			3900 roentgens (IDO)) 4000 roentgens (EGG))

MISCELLANEOUS SAMPLES CHECKED SPECTRALLY FOR MAJOR FISSION PRODUCT IDENTIFICATION

Sample Description	Time of Analysis Date	Hour	Analyzed For	General Statement	Identification By	Remarks
Smear from GCRE change room	1/4/61		Gross fission products, U		Gamma spectra	Barium-lanthanum 140, zirconium-niobium 95, cesium 134, and uranium
Square of cloth from second body removed	1/4/61	2250	Gross fission products	Gross fission products found	Gamma spectra	
Air sample on MSA 2133 paper taken in control room of SL-1	1/5/61	2000	Gross fission products		Gamma spectra	Barium-lanthanum 140, zirconium-niobium 95, cesium 134, cesium 137, cerium 141, cerium 144, and iodine 131
450 ml of air from SL-1 half way up access stairway, collected by gas sampler	1/5/61	0530		Very low activity; no identification made		
Air sample taken outside entrance to SL-1 Administration Building on MSA 2133	1/6/61	1230	Iodine isotopes		Chemical separation and gamma spectra	Iodine 131 and 133 identified on separated iodine fraction. Unable to determine iodine 133 quantitatively.

INTERNAL DOSE CONSIDERATIONS FROM EXCRETION DATA

360 Urine samples from 180 people have been analyzed for iodine 131 by gross gamma counting. Spectra have been obtained on 20 of these urine samples, and all show that the major activity is iodine 131. Excretion curves are being plotted on the 14 people whose initial urine activity was the highest. Early estimates from these curves indicate that no person received over approximately 10 rads thyroid dose. More accurate estimates must wait until further excretion data is obtained.

In addition to the iodine 131 analysis on urine, approximately 120 samples are in process for strontium 90, covering 80 persons. Final estimates of both strontium 90 and iodine 131 dose will not be available for two to three weeks.

OPTIONAL FORM NO. 10
5010-104

UNITED STATES GOVERNMENT

Memorandum

ANNEX M

TO : Curtis A. Nelson, Director
Division of Inspection

DATE: February 13, 1961

FROM : Forrest Western, Deputy Director
Office of Health and Safety

SUBJECT: IMPLICATIONS OF AN SL-1 INCIDENT TO PUBLIC IN A POPULATED AREA

In response to your request for a statement "as to the implications of an SL-1 incident to the public in a populated area," the following discussion is based in part on the information provided you by E. B. Johnson in his memorandum of February 1, 1961. This discussion is summarized as follows:

SUMMARY

If the SL-1 incident had occurred in a populated area, persons outside the exclusion area would not have received serious doses of radiation during and immediately following the explosion. It is unlikely that any such person would have unavoidably received a radiation dose larger than he would be permitted on an annual basis under current standards of radiation protection; that is 0.5 rem (500 mrem). Depending upon such factors as relative location of nearest residents, meteorological conditions, and season of year, institution of countermeasures to limit exposure to radiation directly from the reactor or from foods produced in the immediate area might be required within periods of time ranging from several hours to two or three days. Appropriate measures might include the erection of a shield around the reactor building or alternatively the evacuation of persons living adjacent to the exclusion area; the control of certain foods; and the administration of stable iodine to reduce the uptake by the thyroid of radioiodine ingested or inhaled. It is likely that the biological effects of exposure to radiation would be much less important than other effects such as emotional stress, inconvenience, and economic loss.

The above conclusions are based upon the following considerations:

It would be desirable to consider separately those exposures to radiation and to radioactive materials which would have occurred before effective countermeasures might have been taken and those exposures which could be avoided if effective countermeasures were preferred. It is also necessary to consider that the same

(continued)

series of events in the reactor may be expected to produce a different set of results in a populated area due to differences in such factors as

(1) the design of the reactor building;

(2) the size of the exclusion area;

(3) seasonal and meteorological conditions;

(4) relation of local vegetation to food supplies, etc.

As a first approximation to the assessment of the effects on a populated area, one estimates the radiation doses which would have been received by persons in the vicinity of the SL-1 area during and following the accident. Some of these estimates are based upon measurements at the locations for which the estimates are made and are considered to be reasonably good; others are extrapolations supported by secondary information and are considered to be "ball park" figures. All estimates are "out-of-doors" exposures. Exposures of persons indoors would be less, depending upon construction and other factors.

1. Prompt gamma and neutron radiation from the nuclear excursion.

The memo cited above quotes an estimated dose of 300 millirem at the boundary of the exclusion area.

Shielding around the reactor would have effectively prevented any radiation from this source, except a small amount which escaped through the top of the reactor and was scattered back by materials in the building and by the atmosphere. I believe the estimate is probably on the high side.

It may be observed that the dose received by persons at greater distances would be much less than at the boundary; e.g. at 500 feet from the boundary the dose from this source would be less than one-tenth that at the boundary.

2. Whole body exposure to gamma radiation from radioactive materials released from the building to the atmosphere.

Persons near the path of the released activity, as they moved downwind, would receive doses of radiation which would depend upon effective distance and time of exposures.

(continued)

The total radiation dose measured out-of-doors over a period of several days on film meters at a point 0.8 miles south of the SL-1 was less than 10 millirems.

By extrapolation from secondary observations, the following corresponding radiation doses at other locations were estimated:

Boundary of exclusion area (downwind)	< 100 mrem
Atomic City, 5.3 miles from SL-1	< 1 mrem
East of Atomic City, center of radioactive plume	< 3 mrem

3. Radiation dose to the thyroid as a result of inhalation of radioiodine.

From measurements of radioiodine removed from the air by continuous samplers, the following total radiation doses to the thyroid were estimated:

Atomic City	1 millirem
East of Atomic City	3 millirem

By extrapolation, corresponding doses nearer the SL-1 were estimated:

Boundary of exclusion area	100 millirems
0.8 miles south of SL-1	10 millirems

Although only a fraction of the radioactive material escaping to the atmosphere from the building is believed to have escaped during the first several hours following the accident, without detailed knowledge of possible variations in wind direction, one cannot conclude what fractions of the above doses may have been received in corresponding periods of time.

4. Radiation doses which could be largely avoided by effective countermeasures.

(a) Radiation from radioactive materials in the reactor building.

(continued)

Because the reactor had been shut down for 10 days preceding the accident, the level of radiation from the radioactive material in the reactor was decreasing rather slowly (about one-half in sixteen days). Total radiation doses from this source during the first few days following the accident would be nearly proportional to the length of exposure. The following dose rates were observed:

At the nearest boundary of the exclusion area, 120 feet from the reactor,	about 600 millirem/hour
300 feet from the reactor,	about 90 millirem/hour
2,000 feet from the reactor,	less than 2 millirem/hour

If the reactor had been located in a populated community with the same exclusion area, persons living adjacent to the boundary of the exclusion area would have required some countermeasure (e.g., evacuation within the first few hours) to have avoided excessive exposure from this source.

(b) Radioactivity in food.

Depending upon the location and the season of the year, occurrence of the SL-1 accident in a populated area might have resulted in excessive quantities of radioiodine in food, particularly vegetables and milk. While no vegetables were involved in the SL-1 incident, maximum concentrations of radioiodine on sage brush indicate that vegetables growing downwind from the reactor might not have been usable for several weeks after the accident.

The nearest cows were several miles beyond Atomic City. On the basis of concentrations of radioiodine observed in samples of milk taken from farms in this area, it was estimated that the total dose to the thyroid of a child from daily use of the milk would be less than 100 millirems. By extrapolation based on comparative concentrations of radioiodine in the environment at other locations, it was estimated that if the cows had been at locations nearer the reactor, daily use of their milk could have resulted in the following total doses to the thyroid:

(continued)

Atomic City	300 millirem
East of Atomic City	900 millirem
0.8 miles south of SL-1	3 rem

These numbers are not directly applicable to other areas and seasons of the year because of differences in feeding. They do suggest, however, that if the accident had occurred in the midst of a milk producing area, control measures to avoid excessive concentrations of radioiodine in milk might have been necessary.

MECHANICAL SPECIALTY

TRAINING

NUCLEAR POWER PLANT

OPERATORS COURSE

CONTROL ROD DRIVES

(SL-1)

CHAPTER II

This chapter is to be attached to or bound with chapter I, previously distributed, as user desires.

TRAINING BRANCH

NUCLEAR POWER FIELD OFFICE

70593 O—61——9

CHAPTER II

SL-1 Rod Drive

Description: (General) Figures 8-10

The core structure of the SL-1 is designed to accomodate nine control rods, although only five are presently being utilized. These five control rods are composed of cadmium sheets with aluminum-nickel alloy cladding and are of cross type construction (see Figure 1). The remaining four unused control positions will accomodate "T" type control rods.

The control rods in their fully inserted position in the core extend 3 1/8 inches below the nominal lower fuel dimension. Stainless steel ball-joint end fittings are attached to the upper ends of the control rods. These are used to connect the control rod to the rod drive mechanism by means of a ball joint gripper located at the lower end of the rod drive extension shaft. A set of concentric springs located in the upper portion of the housing acts as a shock absorber and positive stop during rod drops. (see Figure 2)

Vertical linear motion is imparted to the rod by a rack and pinion gear. The rack and pinion gears, the pinion support bearings, and backup roller operate in a saturated steam atmosphere above the reactor vessel.

A seal is used where the pinion drive shaft penetrates the rack housing. This seal assembly consists of a five element labyrinth pressure breakdown seal. The seal has 5 stationary and 5 floating rings. The guide bushing is fluted to allow easy passage of the water that is introduced between it and the seal elements. This water provides cooling for the seals and prevents outward steam leakage by assuring a flow of water into the reactor vessel. Leakage thru the seal assembly is collected by a lantern ring and returned to the condensate tank.

The control rod drive motor and position indicator assembly are located outside the concrete biological shield above the reactor vessel. A universal coupling connects this assembly with the pinion drive shaft.

The transmission assembly consists of 2 clutches, and 2 springs. An electromagnetic clutch is used to transmit the force necessary to drive the control rod in either direction. If the electromagnetic clutch should fail, the cam clutch, which is unidirectional, will drive the rods down.

The rod drives were designed for operation with two negator springs attached to each pinion shaft to limit free fall shock forces. Control rod operation of SL-1 has revealed that rod drop times increase following reactor shutdown. A buildup of particulate matter was observed to occur in the water seal rings, pinion bearings, bushings, and rack housing areas. When this buildup interferes with rod performance and prevents the rod from meeting prescribed rod drop requirements (4 feet per second approximately) the condition can be temporarily corrected by removing one of the negator springs. The negator springs are mounted just above the pinion support bearings.

A gear on the negator spring drum drives the gear train that is coupled directly to the position indicator synchro-transmitter and micro switches. This arrangement assures the operator of positive position indication at all times during operation. The micro switches are used to operate the upper and lower limit switches, control panel indicating lights, and electric motor interlocks. Adjustment of these micro switches is the responsibility of the instrumentation section.

Control rod travel is limited to 2.85 inches per minute for the 4 outer control rods and 1.85 inches per minute for the center control rod.

There is no gang switch for control rod operation. All rods are withdrawn and inserted individually utilizing a selector switch wired to a single drive switch with the exception of #9. This is the only rod that has an individual drive switch and can be driven independently with regard to direction in reference to any other rod movement.

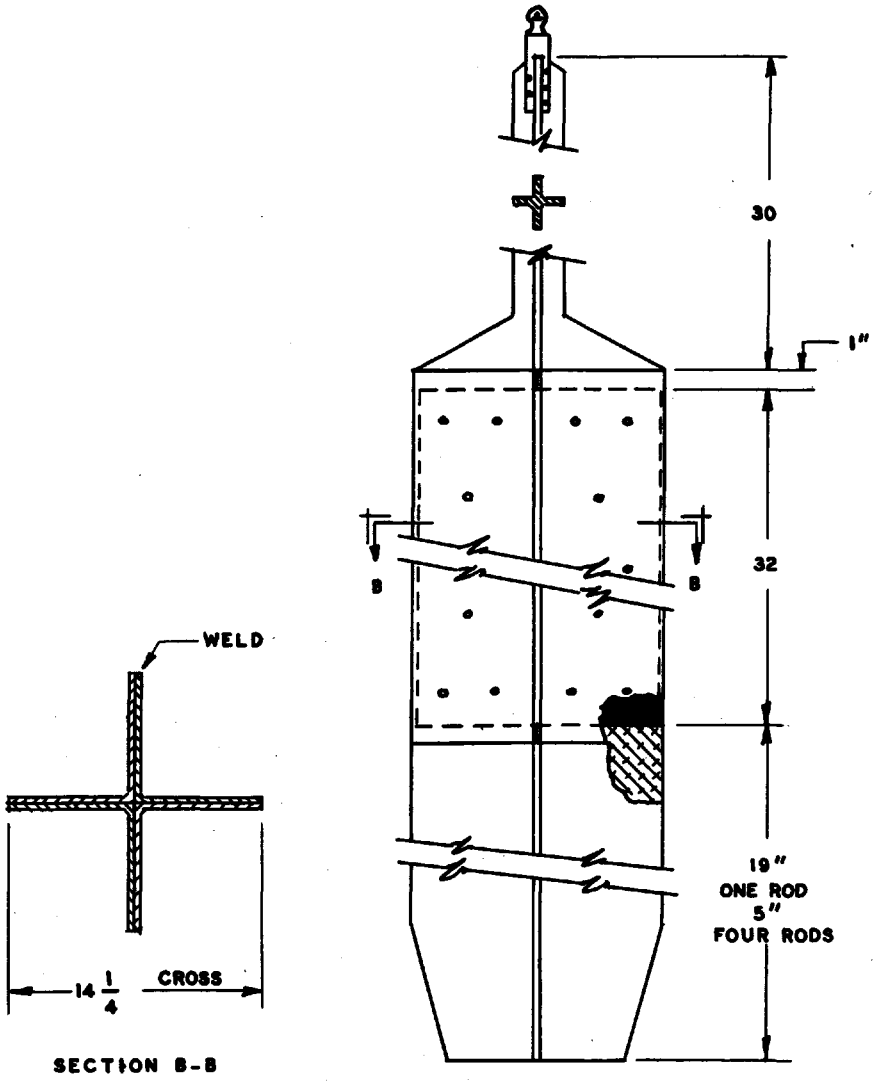

CROSS TYPE CONTROL ROD

FIGURE 1

Annex N/3

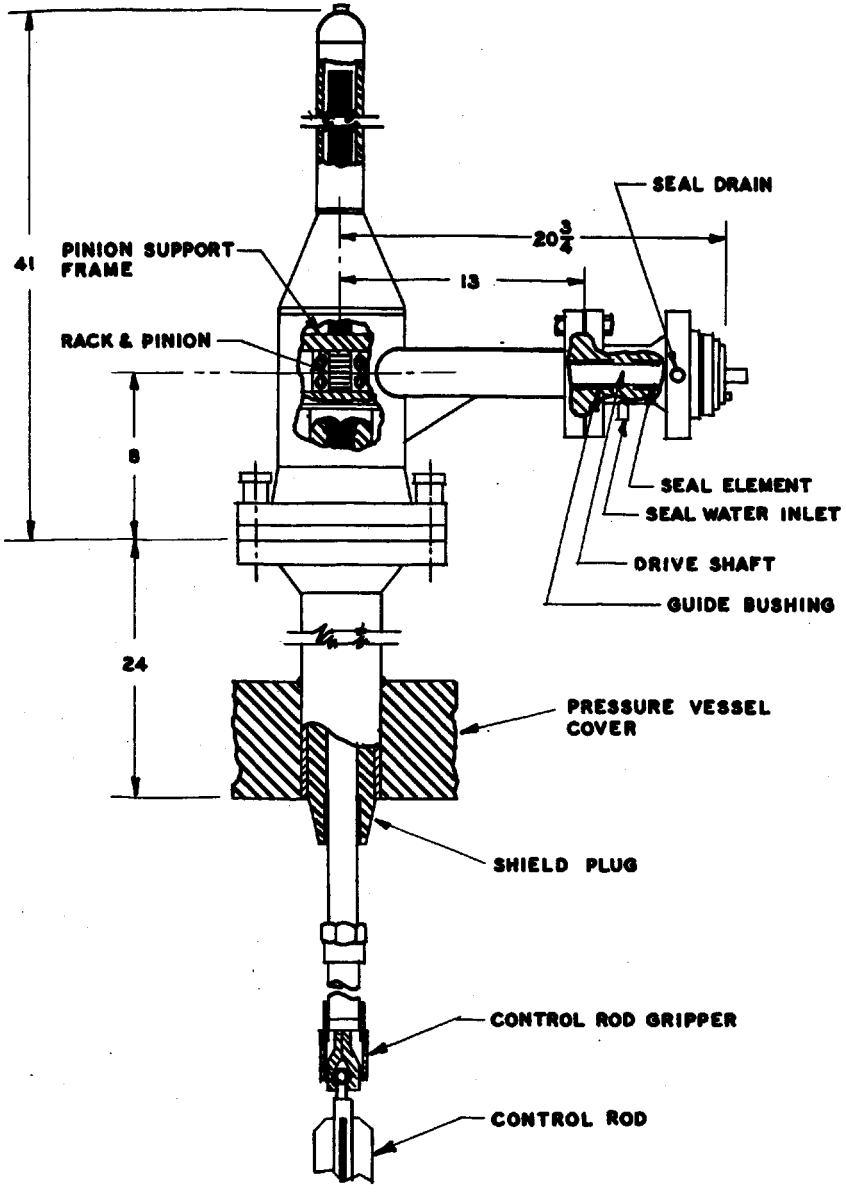

FIGURE 2

CONTROL ROD DRIVE

Removal of Control Rod Drive

1. Conditions to be satisfied before the unit can be removed

a. Reactor scrammed and brought to atmospheric pressure.

b. Reactor water level raised to bottom of plug nozzle in reactor head.

Removal of Motor and Clutch Assembly. (Reference Figure #3)

1. Disconnect electrical connection (#1) to isolate unit electrically.

2. Loosen 2 set screws (#2) and slide coupling off spline.

3. Remove 4 hold down bolts and remove motor and clutch assembly.

4. Manually slide control rod drive shaft from concrete shield block.

NOTE: This procedure is identical for all rods.

Remove Biological Shieldings.

1. Remove top shield plug utilizing a spreader bar and the overhead crane. This plug is constructed of laminated steel and masonite.

2. Remove the four key blocks using the overhead crane.

3. Move the five concrete blocks away from the reactor vessel using chain sling and overhead bridge crane.

Remove Rod Drive Mechanism (Reference Figure #4)

1. Secure feedwater valve to isolate rod drive seals from feedwater pump pressure.

2. Disconnect inlet and outlet lines to rod drive seal assemblies. (#1 and #2) respectively.

3. Remove tie rod studs (#3)

4. Remove seal assembly and place on a clean blotter paper.

5. Remove pinion shaft extension (#4) from thimble (#5).

Place on clean blotter paper.

6. Remove socket head nuts (#6) using Allen wrench and soft hammer.

7. Lift off thimble (#5). Caution; this item is very heavy and cumbersome and must be carefully balanced during removal.

8. Remove two retaining rings (#7) and remove pinions and bearings (#8)

9. Secure special tool CRT #1 on top of rack (#9) and raise rod not more than 4 inches. Secure "C" clamp to rack at the top of spring housing (#10)

10. Remove special tool CRT #1 from rack and remove slotted nut (#11) and washer (#12)

11. Secure special tool CRT #1 to top of rack and remove "C" clamp, then lower control rod until the gripper knob located at upper end of fuel element makes contact with the core shroud.

12. Remove 8 socket head cap screws (#13) and lift off buffer spring housing and pinion support assembly (#14) and place on clean blotter paper.

13. Secure two 3/8 inch eye bolts into spring housing (#15). Lift off spring housing and place on clean blotter paper.

14. Place special tool CRT #2 over rack and extension rod (#16) and secure special tool CRT #1 to rack. Connect special tool CRT #2 to hook of overhead crane and take up the weight of rack and extension rod. Rotate special tool in counter-clockwise direction; this action disconnects the split coupling (#17) from the control rod gripper (#18) located at the lower end of the extension rod. The special tools and extension rod are then lifted out by the overhead crane as a single unit.

Installation of Control Rod Drive

1. Assembly of the rod drive mechanism, replacement of concrete shield blocks and installation of motor and clutch assembly are the reverse of disassembly. Replace all flexitallic gaskets insuring that all mating surfaces are wiped clean with alcohol or other comparable cleaning agent. Particular care should be taken when securing the rod drive seal cooling lines and fittings. If not properly fitted up considerable leakage will occur and result in a loss of feedwater and pressure.

Disassembly and Assembly of Components

1. Seal Disassembly. (Reference Figure 4)

a. Remove snap ring (#19) and coupling (#20). Tape snap ring and key (#21) to coupling to prevent loss of these items.

b. Remove five socket head cap screws (#22) and bearing retainer (#23).

c. Remove bearing locknut (#24) and 5 socket head cap screws (#25) and remove water gland seal (#26).

d. Remove seal shaft (#27).

e. Remove lantern ring (#28).

f. Remove 5 seal diaphrams (#29) and floating ring (#30).

g. Remove retaining ring (#31) and stellite bushing (#32)

NOTE: The seal diaphrams and floating rings must be kept in pairs and in the order of their removal from the seal housing as they must be replaced in their original order. All parts of this assembly will be cleaned using acetone or alcohol and dried with soft lint free material.

NOTE: The assembly of this unit is the reverse of disassembly.

Spring Housing and Pinions Support Disassembly.

1. Remove 4 socket head cap screws (#33) and remove backup roller (#34).

2. Remove 6 socket head cap screws (#35) and remove spring housing (#10).

3. Remove spring seat (#36) and two compression springs (#37) and (#38).

NOTE: Assembly of spring housing and pinions support assembly is the reverse of disassembly.

Clutch Unit Disassembly (Reference Figure 3)

1. Remove motor from base.

2. Disconnect and tag clutch power wires.

3. Remove change gear (#39).

4. Remove instrument pad.

5. Remove 2 socket head cap screws (#40) and bearing cap (#41)

6. Remove spline (#42), bearing (#43), and shaft assembly (#44).

7. Remove 2 set screws (#45) in cam clutch (#46) through hole (#47) in cam clutch cover (#48) and remove drive shaft (#49) and bearing (#50).

8. Remove negator spring drum (#51), cam clutch (#46), and magnetic clutch (#52).

NOTE: Assembly of this unit is the reverse order of disassembly. The refacing of the magnetic clutch is accomplished in the same manner as described in Chapter I, pages 11-13.

Installation of Negator Spring. (Reference Figure 3)

1. Loosen set screw and remove coupling from motor and clutch assembly.

2. Drive rod out until the position indicator in the control room reaches approximately 28 inches.

NOTE: Limit switches must be by-passed.

3. Remove socket head cap screws. (53-54)

4. Install negator spring (55 or 56) in slot on negator spring drum (51) and replace socket head cap screws (53-54).

NOTE: Removal of negator spring is accomplished in the reverse procedure described above.

CONTROL ROD DRIVE CLUTCH ASSEMBLY

FIGURE 3

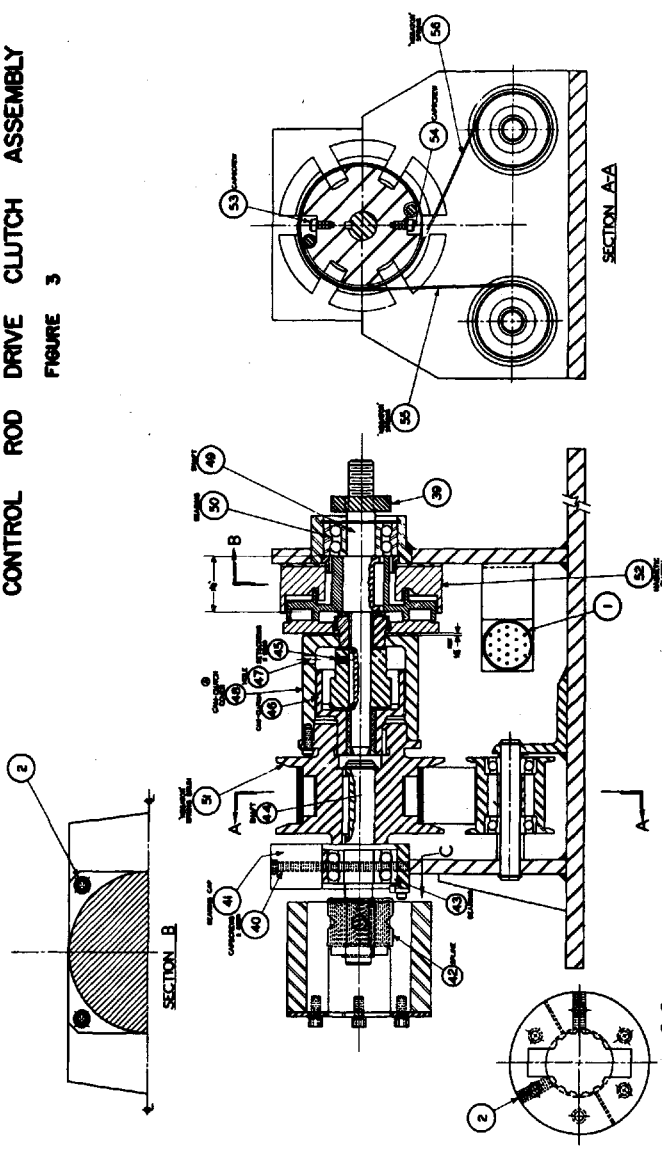

1. Electrical connection
2. Set Screws
39. Change gear
40. Socket head cap screws
41. Bearing cap
42. Spline
43. Bearing
44. Shaft assembly
45. Set screws
46. Cam clutch
47. Hole
48. Clutch cover
49. Drive shaft
50. Bearing
51. Negator spring drum
52. Magnetic clutch
53. Socket head screws
54. Socket head screws
55. Negator spring
56. Negator spring

CONTROL ROD DRIVE

FIGURE 4

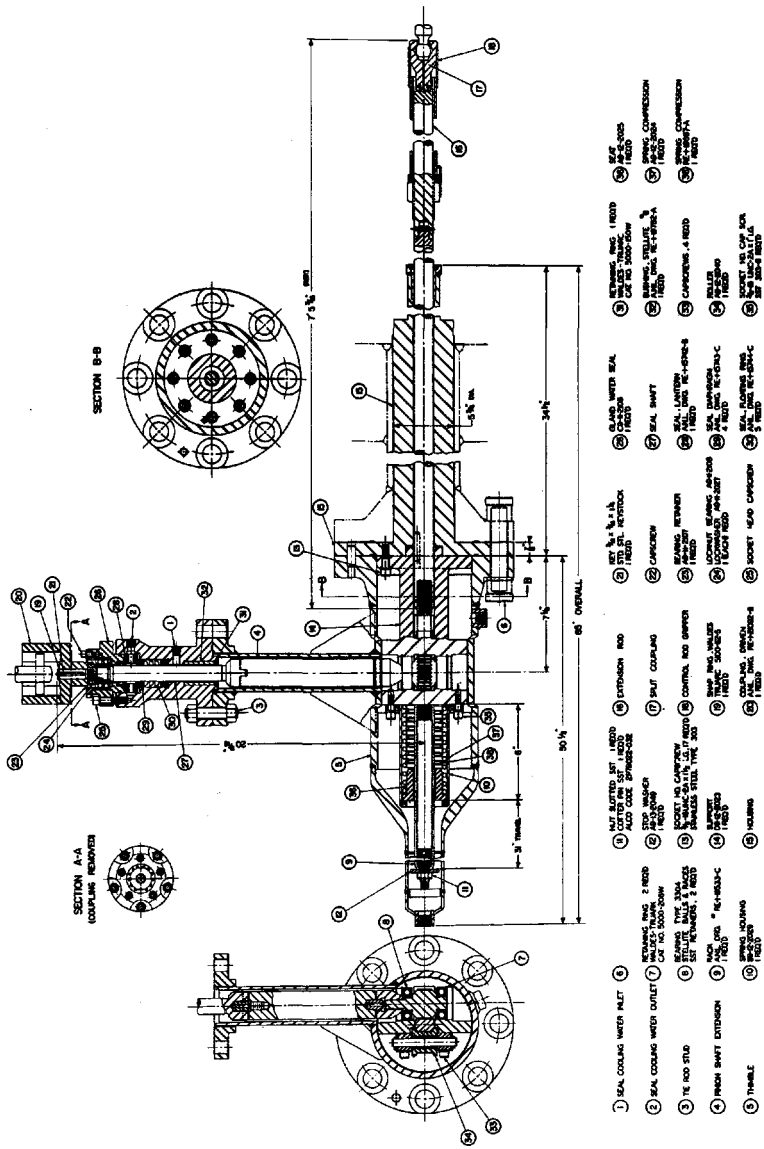

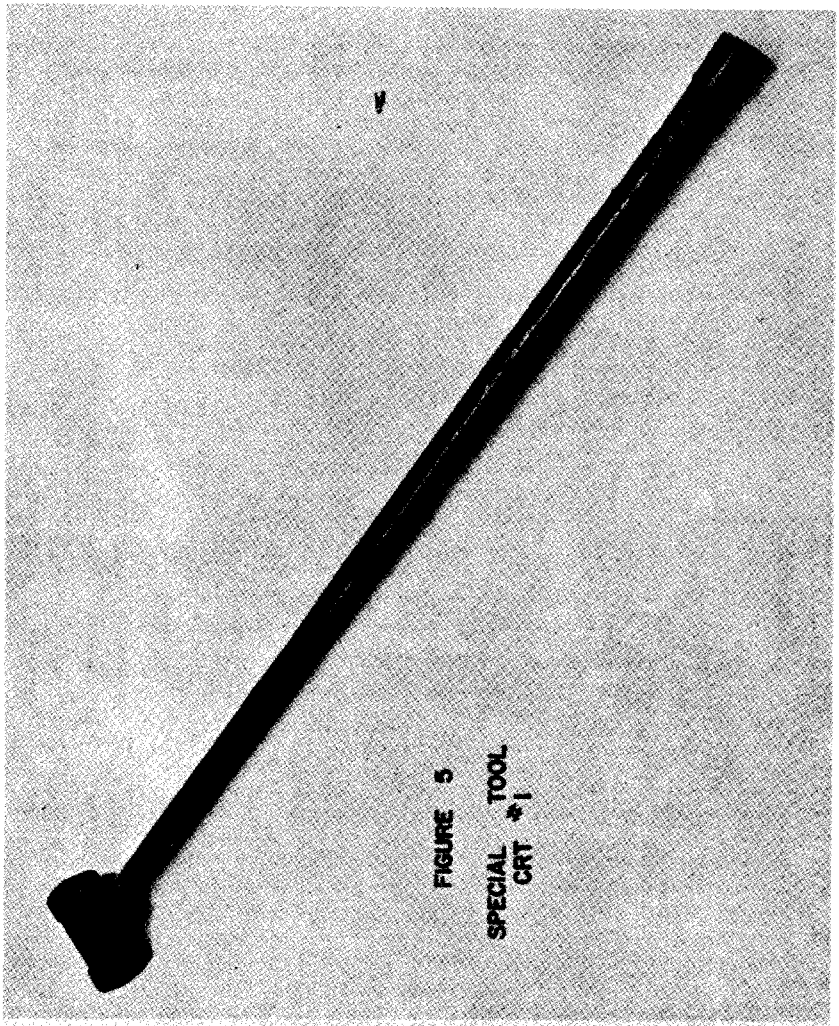

FIGURE 5
SPECIAL TOOL
CRT #1

Annex N/7

FIGURE 8
SPECIAL TOOL
CRT #2

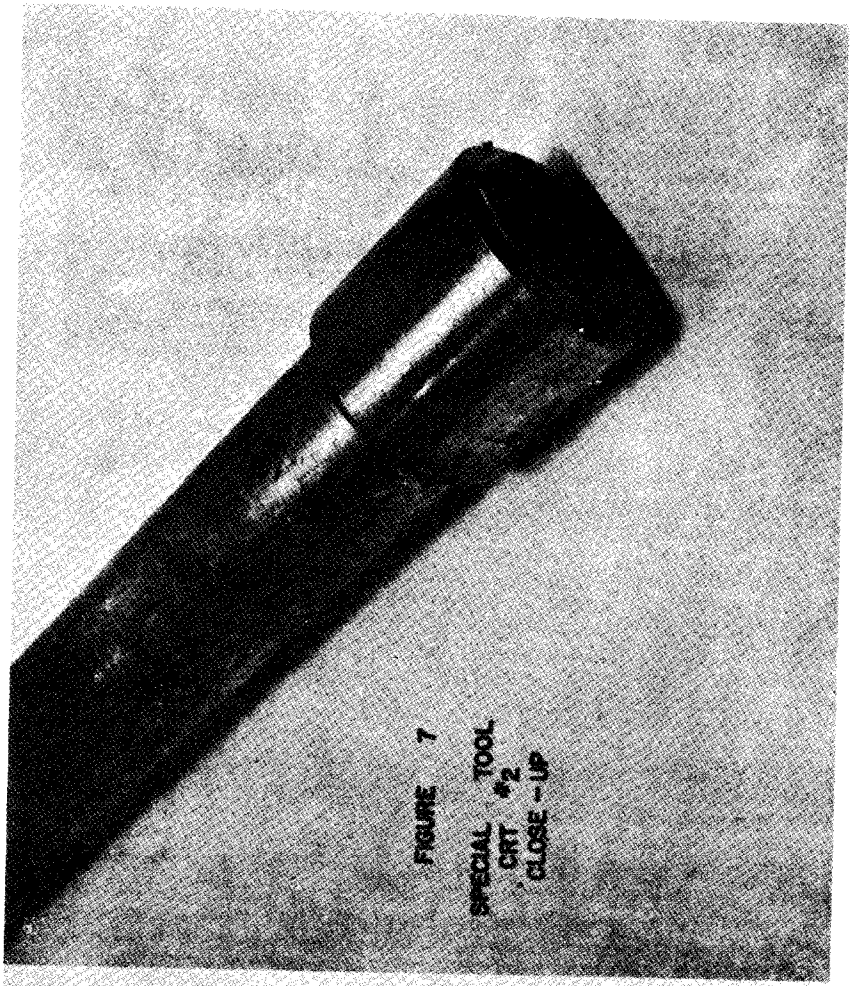

FIGURE 7

SPECIAL TOOL
CRT #2
CLOSE-UP

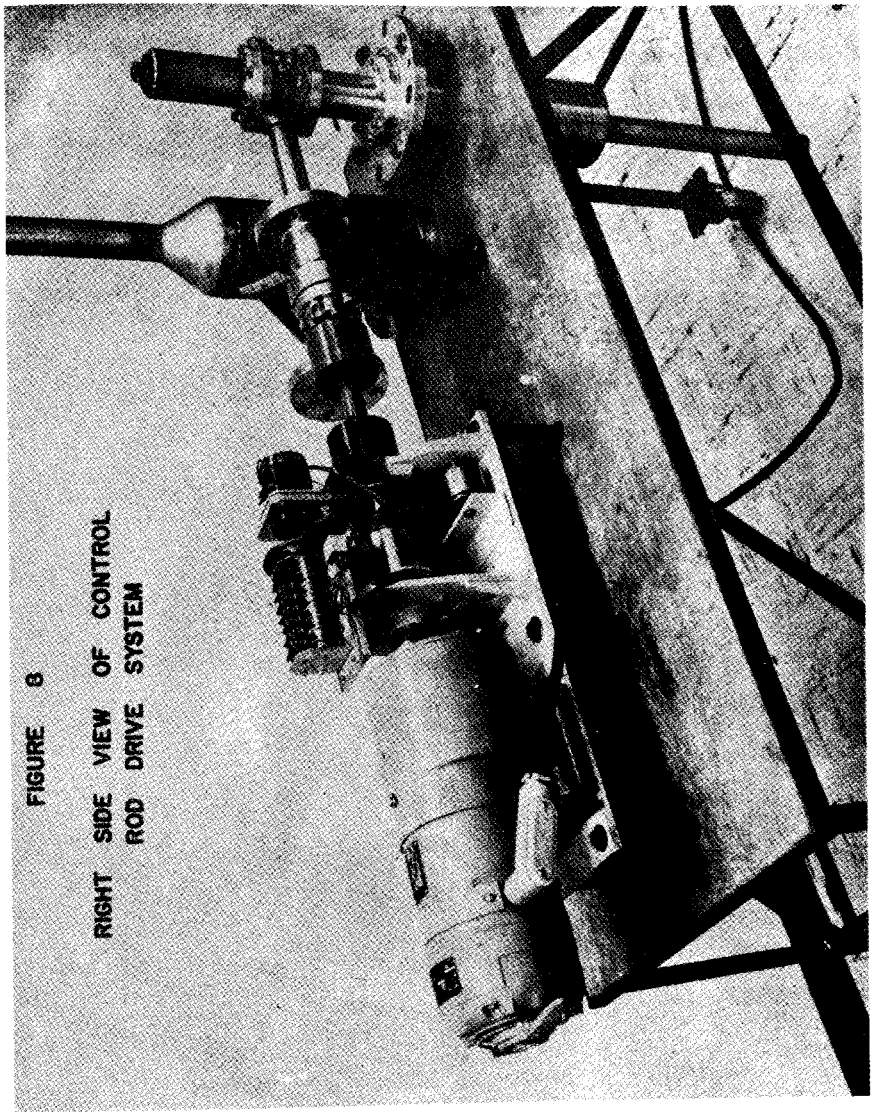

FIGURE 8

RIGHT SIDE VIEW OF CONTROL ROD DRIVE SYSTEM

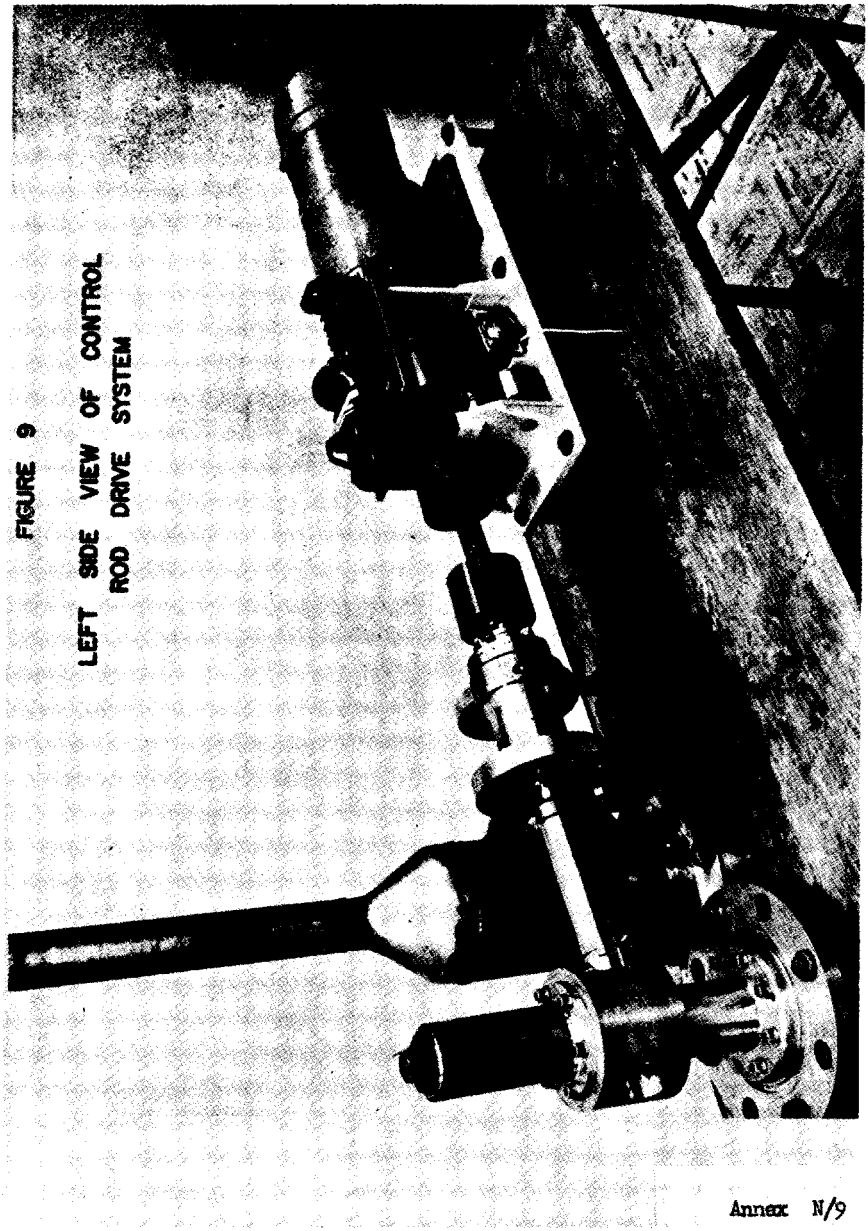

FIGURE 9

LEFT SIDE VIEW OF CONTROL ROD DRIVE SYSTEM

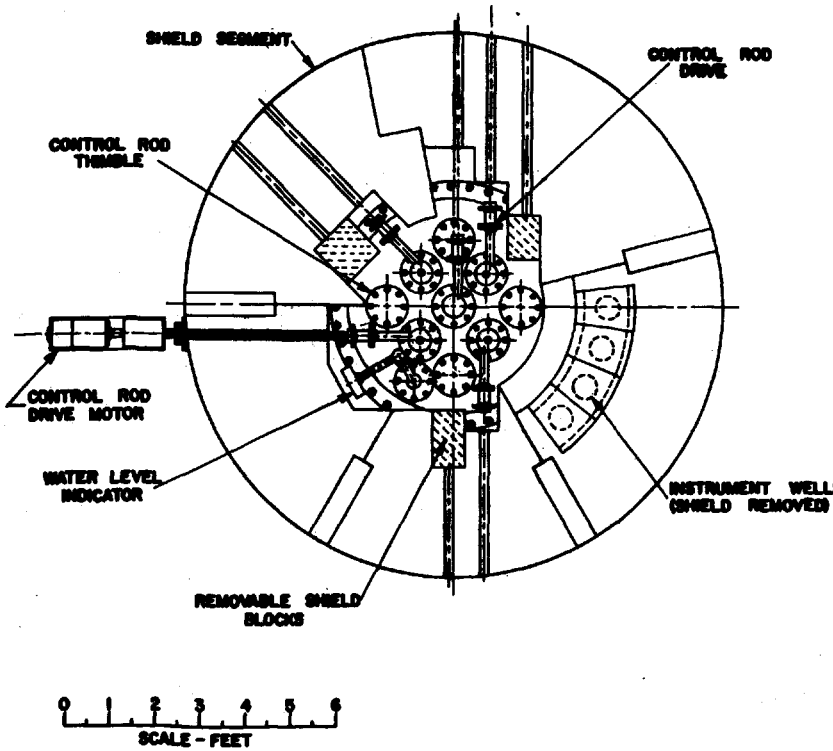

CONTROL ROD DRIVES & TOP SHIELDING

FIGURE 10

ANNEX O

REACTIVITY MAGNITUDES AND ADDITION RATES IN NUCLEAR EXCURSIONS

by W. E. Nyer

Under the assumption that the SL-1 incident was the consequence of a nuclear excursion, the following questions arise concerning the nature of the incident:

1. What transient pressures were generated?
2. What was the nuclear energy release?
3. What reactor period was attained?
4. What rate of reactivity addition was required?
5. What total reactivity addition was necessary?

The latter two questions are of special value in assessing the plausibility of various modes of initiating excursions.

The Spert reactor excursion studies provide information on comparable, but less violent situations, over a wide range of core characterisitics and conditions. Most of the important parameters of the SL-1 core fall within the range of values of these parameters in the Spert experiments. These similarities invite a measure of confidence in the qualitative features that can be estimated for the kinetics of the SL-1 core; however, the important differences between the SL-1 reactor and the Spert cores, combined with the differences between the incident and the experiments, make a quantitative evaluation out of the question. In particular, a fuller knowledge of the void and temperature coefficients is usually obtained for Spert cores than existed for SL-1; the Spert experiments have not included tests in which pressure effects comparable with those in the incident

were generated, which are primarily in the destructive regions of reactivity additions; distorted flux patterns may have existed in the SL-1; and the number and the thickness of fuel plates in the SL-1 were considerably different from Spert cores. None-the-less, the experience and data obtained from the Spert program may be extrapolated to indicate some likely features of destructive excursions and, taken with the destructive Borax experiment and the known SL-1 core parameters, they may be used to estimate the kinetic characteristics of the SL-1 in order to attempt to answer the above questions.

On the basis of the physical damage evident in the SL-1 reactor, past experience would indicate that the incident was one in which the reactor was super-prompt critical, and melting of the fuel plates occurred to a significant, but not preponderant, degree. It is unlikely that transient pressures capable of causing such damage would arise unless some melting occurred. For this reason, a plausible lower limit for this incident is an excursion which raises the hottest fuel plates at least to the melting point. The range of reciprocal period, α, required to approach the melting point for the applicable Spert cores is from 200 sec^{-1} to 400 sec^{-1}, with resultant transient pressures in the neighborhood of 100 psi. It is estimated that the SL-1 kinetic behavior would lie in the range of the above cores subject to the differences due to neutron flux distributions and fuel plate differences. The latter would make it possible to produce melting at lower α for the SL-1 core. However, with reasonable confidence, it can be estimated that for the

following excursion some melting would occur in the SL-1 core:

$\alpha \sim 200\ \text{sec}^{-1}$
period $\sim$ 5 msec
Energy release $\sim$ 40 MW-seconds
Transient pressure $\sim$ 100 psi

Using 55 μsec for the prompt neutron lifetime, ℓ, and 0.65% as the delayed neutron fraction, the required reactivity addition is the following:

$$\Delta k \text{ prompt} \sim 1.1\%$$

$$\text{or } \Delta k \text{ total} \sim 1.75\%$$

In addition to the above requirement on the total reactivity to be added to the system, there is also a requirement on the rate at which it must be added to produce an excursion. The required rate, $\dot{k}$, at which reactivity must be added for the reactivity to appear as a step of magnitude $\alpha = \Delta k_p/\ell$ is given by the formula

$$\alpha = \sqrt{2\,\frac{\dot{k}}{\ell}} \times f$$

"f" is a slowly-varying logarithmic function of the initial power and the rate of reactivity addition which, for this situation, has approximately the value 15. With rearrangement and appropriate values of the constants inserted, the formula becomes

$$\dot{k}(\%/\text{sec}) = 6\left(\Delta k_p(\%)\right)^2$$

This relation is relatively exact since the only reactor parameter that enters in a strong way is the prompt neutron lifetime.

It is apparent as a general property of this relation that large excess reactivities require extremely high insertion

rates which, in turn, require acceleration values not readily obtainable without special devices.

The acceleration requirements can be illustrated by the following considerations. Assuming that the reactivity introduced by a control rod is proportional to its displacement, the reactivity added at any time is proportional to the square of rate of reactivity addition divided by the acceleration. At the same time, for this reactivity to be added as a step requires that the rate of addition be proportional to square of the added reactivity. Thus, the acceleration is proportional to the cube of the reactivity to be added.

These considerations on required accelerations and reactivity addition rates can be applied to the present situation to estimate a reasonable upper value for attainable period in the SL-1. Use must also be made of measurements by Combustion Engineering, Inc., (C. Wayne Bills, Chairman, Technical Advisory Committee, personal communication) of the speeds with which a mockup of the No. 9 control rod could be manually lifted. The measurements can be interpreted as requiring an effective upward acceleration of about 1 g acting over the early part of travel. Rod speeds as high as 6 ft per sec are attainable, with corresponding reactivity insertion rates in the neighborhood of 15% per sec. Table I, prepared by Mr. A. H. Spano, shows that this would result in an excursion with a 3.4 msec period and an available prompt reactivity of 1.6%. Thus, for any rod-worth up to this value, the demonstrably attainable rod speeds indicated by the experiment would permit all of this reactivity to be inserted in an excursion.

On the other hand, twice this reactivity would require insertion rates of 60% per sec and net accelerations in the neighborhood of 8 g. This would yield a period of 1.7 msec. The available rod-worth data indicate decreasing worth for large displacements, which would require a greater acceleration than the estimated 8 g. Thus, it would appear that the rates attained in the experiment are very nearly upper limits as well as being readily attainable values.

Table I - Reactivity Addition Rates

Δk_p (%)	k' (%/sec)	α (sec^{-1})	period (msec)
0.1	0.06	18	55
0.2	0.24	36	28
0.4	0.96	73	14
0.6	2.16	109	9
0.8	3.8	146	7
1.0	6.0	180	5.5
1.6	15	290	3.4
2	24	360	2.8
4	96	730	1.4
6	216	1100	0.9
8	384	1500	0.7
10	600	1800	0.55

Spert experience extrapolates to energy releases between 40 MW-seconds and 200 MW-seconds for excursions with α equal to 300. This would undoubtedly result in significant melting of fuel plates and generation of transient pressures in excess

of several hundred psi.

Considerably refined estimates could be made with reliable flux information and reactivity values for the No. 9 rod or by more detailed comparison of Spert and SL-1 data. Dr. J. R. Dietrich (C. Wayne Bills, Chairman, Technical Advisory Committee, personal communication) has attempted this, and his analysis suggests that an energy release in the 100-200 MWs range would be consistent with the observed results. He also suggests that internal melting and surface melting could occur for periods as long as 12.5 msec ($\alpha = 80$ sec $^{-1}$) and 5.3 msec ($\alpha = 190$ sec $^{-1}$), respectively. He estimates that the total energy stored in fuel plates would be about 20 MW-seconds for the internal-melting case and 80 MW-seconds for the surface-melting case.

Excursions of considerable magnitude have been obtained at Spert by other means than rapid injection of large excess reactivities. Essentially steady operation with large reactivities compensated by voids have also brought this about by self-induced oscillations which collapsed the voids.

In the SL-1, it would be possible for slow withdrawal of the No.9 control rod to produce such an excursion. This would require greater reactivities than the equivalent cases discussed above because some bulk-water heating to the boiling region would be necessary. However, this is offset to some degree since greater violence usually accompanies excursions initiated from high temperatures than from low temperatures. This would also require that the rod be maintained in the withdrawn position for times at least as long as seconds

and possibly as long as minutes. The time scale for this situation to develop is sufficiently long that corrective action by an operator is ordinarily possible, provided he is aware of the developing power increase.

In summary, the observed mechanical damage in the SL-1 incident is consistent with excursions with a reciprocal period, α, in the range 200 sec^{-1} to 290 sec^{-1}. Correspondingly, the periods would be 5 msec to 3.4 msec, the transient pressures would range from a hundred psi to, perhaps, somewhat less than a thousand psi, and the energy release would range from 40 MW-seconds to 200 MW-seconds. The attainable rates of reactivity addition would permit the necessary reactivity to be introduced to the reactor provided it were available in the control rod. It is unlikely that significantly greater amounts could be inserted, nor does it appear that significantly greater rod worth existed. It is possible, but less likely, that the incident could be produced by very slow insertions of reactivity. Improvement in the values of the estimates by refinement in the analysis is not to be expected without new information becoming known.

ANNEX P

POSSIBLE REACTIVITY ADDITIONS TO SL-1 REACTOR SINCE CONSTRUCTION

by W. K. Ergen

1. Expected Reactivity Increase

As in many reactors with large amounts of burnable poison, the reactivity of this reactor increased at the beginning of core life as the burnup of poison overcompensated the loss of reactivity by burnup of fuel, fission-fragment buildup, etc. After much of the boron was burned up, the reactivity losses due to burnup of fuel, fission-fragment buildup, etc., dominated and reactivity decreased. The reactivity thus went through a maximum. In the Hazards Summary Report 8/ (p. 38 and fig. 28) it was estimated (see Section III D3h, and Figure 28*) that the maximum reactivity would exceed the reactivity of the fresh reactor by about 0.6% corresponding to one or two inches in the position of the central control rod in the region of this rod's largest differential worth. The maximum

* In addition to the approximations and assumptions listed in the reference, the following assumptions were made: a) about 11% of reactivity would be controlled by boron, and b) the boron burnup would proceed effectively as if the boron was distributed uniformly in the fuel "meat". The time of the maximum is read from the curve to be 300 days of "operation at average power". The average power assumed was 1.73 Mwth, according to D. H. Shaftman, private communication.

was estimated to occur roughly at 500 Mw days*. At the time of the incident, 900 Mw days, the reactivity would have returned to its original value.

Later, another calculation was made by Combustion Engineering, Inc. According to this calculation, the maximum of reactivity would exceed the reactivity of the fresh reactor by much more than the amount computed in the original Hazards Report (two inches of the five-rod bank position). Furthermore, at the time of the incident, the reactivity would just have reached its maximum.

2. Observed Loss of Boron

In addition to the scheduled nuclear burnup of boron, some boron was lost by damage to the boron strips. This additional loss caused a further change in critical position of the five-rod bank by 2.5 inches, so that this critical position had changed by 4.5 inches as compared to the original value in the fresh reactor. This is an experimental result, obtained in September 1960. It should be emphasized that the critical position of the center rod, in the cold reactor, with Xe decayed, and the off-center rods inserted to indicated zero, was measured in September 1960 and found to be 14.3 inches.

An attempt was made to compensate for this loss of boron by the addition of cadmium strips. This resulted in a change in the critical position of the rod bank, retrieving about two-thirds of the above 2.5 inches.

3. Loss of Boron Not Observed

Since the reactor had been losing boron mechanically in an uncontrolled, but observable, manner up to at least August 1960, the question may naturally be raised whether further mechanical boron loss occurred after this time but prior to the incident. From the data presented by Combustion Engineering, Inc., the control rod positions - for comparable conditions of the reactor - remained the same. From this it may be concluded that little or no boron was lost mechanically. However, the number of the control-rod positions presented in this connection is very small. The reason for this is the desire of CEI to use only data obtained under easily analyzed conditions. There are literally hundreds of control-rod position records, and an attempt is being made to obtain some information from these records.

The point has also been made that some boron may have been lost from the core and have been carried around by the boiling water while the reactor was operating. Thus the reactor would have been poisoned by this boron while the reactor was in operation and most of the control-rod readings were taken. However, after the prolonged shutdown, this boron would have settled and the poison would have disappeared.

The water volume in the core was 6-7 cubic feet and the total amount of water was about 100 cubic feet. Thus only a small part of the

floating boron would have been in the core and the poisoning would have been negligible. Also, settling of floating boron would have been noticed after other shutdowns, had it occurred.

The burnup of boron up to the time of the incident amounted to 5%. Even allowing for the known mechanical loss of boron, the remaining boron exceeded the shutdown margin, so that its loss - had it occurred - would have made the reactor critical.

4. Loss of Cadmium Strips

Each strip was worth less than 0.2-inch in rod-bank position. Unless the unlikely loss of several strips is postulated, loss of cadmium strips would not have been a significant reactivity addition.

5. Mechanical Loss of an Off-Center Control Rod

Pre-incident removal of an off-center control rod is unlikely on the basis of the presently available post-incident information. However, had an off-center rod been lost, the reactor would have been close to critical before the central rod was withdrawn. This statement is based on the report, referring to room temperature, that "in the fresh core, without poisoning by Samarium-149, it is doubtful that shutdown would have been possible with two off-center control rods at 30 inches". Since then the reactor has increased in reactivity partly due to mechanical loss of boron, and partly (at least according to CEI) by the expected burnup.

Partial removal of an off-center control rod prior to the incident could theoretically have been caused by a break of the rod extension or of the mechanical stop near the top of the rod extension. In spite of the large force that occasionally was applied to the rods when they were not moving freely, such a break appears now unlikely. However, had the break occurred, an off-center rod could fall partly out of the reactor, leaving about 10 inches of poison overlapping the active material.

The central rod had a long follower and could not fall that far. Besides it was found above the core.

6. Burnup of Cadmium in the Control Rods

If the high-cross section cadmium in the lower part of the central control rod had been wholly or partially burned up by neutron absorption, a slight withdrawal could have brought the reactor critical. However, this possibility seems to be ruled out by the following calculation. The flux at the center was 3×10^{13} n/cm^2 sec; due to the flux depression near the rod it was probably no more than 10^{13} n/cm^2 sec at the rod surface. The neutron current entering the rod from both sides would then be 0.5×10^{13} n/cm^2 sec. The reactor had achieved 900 MwD, or 300 days of full-power operation. The nvt entering the rod was thus 13×10^{19} n/cm^2. The cadmium sheet was 0.060-inch thick; the density of cadmium is 8.6 g/cm^3 and the abundance of the high-cross section isotope Cd 113 is 12%.

From this it can be computed that there are 0.85×10^{21} atoms of Cd^{113} per cm^2. The burnup is thus only 15%. The fact that the rod is black to thermal neutrons is not changed.

7. Melting of Cadmium

If the cadmium had melted, it could conceivably run out of the aluminum sleeve. The melting point of cadmium is 321° C. The operating temperature of the water was 420° F = 216° C 8/ p. 11 and a temperature drop in excess of 100° F from the cadmium to the water could not be postulated even during the high power operation and the connected chugging. Besides, loss of cadmium would have shown up in the control rod positions during reactor operation.

* * * *

In summary it may be said that the fresh cold reactor could have been brought to criticality, with all off-center rods inserted, by withdrawing the center rod to 19 inches above indicated zero. At the time of the incident, a smaller withdrawal would have been sufficient, but the presently available evidence makes it very likely that criticality would only have been achieved by withdrawal, substantially in excess of the allowed 4 inches. It may be added that the reactivity per inch of the central control rod is small if the rod is withdrawn only slightly above indicated zero. It

would be difficult to see how reactivity could be inserted sufficiently fast for the incident, had the rod only been withdrawn slightly, even if a slight withdrawal had in some unexplained manner achieved criticality.

ANNEX Q

SIGNIFICANCE OF CHEMICAL REACTIONS IN THE SL-1 INCIDENT

The occurrence of chemical reactions has been postulated as a possible cause of the SL-1 incident. It has been estimated that the energy release in the incident was about 50 mw-sec. Such an energy release by chemical reaction alone would require the complete reaction of four SL-1 fuel plates or the reaction of 4100 liters of hydrogen and 2250 of oxygen. However, chemical reactions alone are insufficient to explain the known details of the incident.

It has been postulated more reasonably that chemical reactions may have occurred sufficient to raise the control rods and initiate a nuclear incident. It has been shown in a number of investigations (see Higgins and Schultz - IDO-28,000 and review by Epstein - GEAP-3335) that initiation of a chemical reaction between aluminum and water requires melting of aluminum; in fact, self-sustaining chemical reactions initiate only when the aluminum temperature is raised above 1170° C and dispersed with a mean particle size of about 200 μ. Thus, means of melting the aluminum core and elevating its temperature to the range indicated are required. It is shown in ANL-5744 that 12 hours after shut down, the core may be uncovered to a depth of over two feet without serious elevation of the aluminum temperature. It is thus unlikely that decay heat alone could cause

elevation of aluminum temperatures to the required range at the time of the incident. Because of the good conductivity of aluminum, propagation of burning along a fuel plate is inconceivable so long as the plate can conduct to a water reservoir. Thus, initiation of reaction in locations such as irradiated fuel would be expected to quench instantly in a submerged core.

Collection of hydrogen and oxygen in a combustible mixture at some location still requires some means of igniting the mixture. It is shown in the report AECU-3327 that spontaneous ignition of a combustible hydrogen-oxygen mixture will not occur at temperatures below about 950° F.

Thus, no plausible hypothesis has been conceived which postulates chemical reactions as the cause or initiating means for the incident. It is quite conceivable on the other hand that chemical reactions may have served to increase the severity of the nuclear incident. Examination of the metallic debris for extent of oxide formation and crystal structure of the oxide formed may serve to indicate the amount of reaction and the temperature at which such reaction occurred.

Annex Q/2

70593 O—61——11

ANNEX R

INTERVIEWS CONCERNING CHEMICAL AND METALLURGICAL BEHAVIOR OF SL -1

Dr. Benjamin Lustman, Board Consultant

To gain unpublished or up-to-date information covering the chemistry and core metallurgy of SL-1 core I, interviews were held with personnel of Combustion Engineering at Idaho Falls and Argonne National Laboratory in Chicago. Summarized below is the significant information developed in the course of these interviews:

I. Chemistry of SL-1 Core I Operation
Date: January 10, 1960
Consultant to Investigating Board - B. Lustman
Combustion Engineering - Chief Chemist, Nuclear Division, Windsor (part-time); Plant Chemist, SL-1 site.

The Plant Chemist has been the only chemist at the SL-1 site during recent months. He is a 1958 graduate chemist, and, before assignment to the site, was employed by CE at Windsor on chemistry activities associated with the S-1-C project. At the time of the transfer to the site in May, 1960, he was one of three chemists assigned to SL-1 operations, but has recently been the only contractor chemist at the site. He has been involved recently in ordering equipment to permit analysis of radioactive contamination of plant water. All radioactivity analyses have hitherto been performed by CPP personnel at the NRTS.

Routine control of water chemistry was performed by military personnel and involved measurement of pH and resistivity, twice each shift during operation. Although plant operation specifications permit pH to vary between 5.5 and 7.0 and water resistivities of 500,000 ohm cm, water has recently been controlled at 6.5 - 7.0 pH and greater than 750,000 ohm-cm resistivity. Subsequent discussion with Argonne personnel indicated that, at the low water flow rates involved in the SL-1 plant, water chemistry control to maintain minimum aluminum corrosion rates at as high a purity (or resistivity) value as possible was preferred over operation with low pH. Since such operation also minimizes corrosion rates of the stainless steel portions of the plant, such tightening of the water chemistry limits was considered beneficial.

Water purity was maintained within specified limits by use of the purification system. Reactor water was pumped at a rate of 1.5-2 gpm through a regenerative cooler, cloth filters, mixed bed and hydrogen form cation resin ion exchangers, and then back to the reactor vessel. Control of resistivity was maintained by flow through the mixed bed resin and of pH by adjustment of flow through the cation resin. The resins were not regenerated and, during normal operation, were expected to survive for six months of operation. However, because part of the operator training schedule involved changing the resin beds, in practice, the beds had been changed on the average every two months. Most of the contamination in the resin beds was considered to be Na-24 activity,

although no detailed radiochemical or chemical analysis of the deposits had been made. The filters were also changed every two months, apparently because of buildup of radioactive particulate matter; again no analyses were reported of particulate matter on the filters.

While no attempt was made to control water chemistry during shutdowns, it was apparently a practice periodically to record pH and resistivity during such periods. During shutdown and maintenance periods, water was added to the vessel from an open 1000-gallon drum; furthermore, removal of the control rod drive thimbles during the December 23-January 3 shutdown and in-leakage of air after cool-down of the system ensured the dissolution of air in the reactor water. Because of the residual activity of the core, it should be possible to observe the radiolytic formation of nitric acid (or of NH_3) under such conditions, although the CE personnel were apparently unaware of such occurrences. Compilation of the water chemistry records during the shutdown period may thus be of value in revealing chemical changes in the reactor water at the time of the incident. In this connection, it was the Plant Chemist's recollection that pH changed from a shutdown value of 6.5 to a value of 6.2 a few days after shutdown.

Measurement of fission product activity levels during recent months has revealed no increase over that observed in the past, indicating that no observable gross failure of fuel plates had occurred. Because of the unavailability of suitable radiochemical equipment at the site, it has

not been possible to infer the source of radioactivity, whether surface contamination, cladding contamination, or fuel plate defects.

The principal activity in the reactor water had been Na-24 activity formed by an n, alpha reaction with aluminum. The activity levels appear to be inordinately high, 2.11×10^6 dpm/ml at 3 mw operation during recent months of operation. Subsequent inquiries revealed that activity levels in the MTR and ETR are of the order of 10^4 and 10^5 dmp/ml, respectively, in spite of their much higher neutron flux levels (albeit lower operation temperatures). It is further significant that ANL reported Na-24 activity levels of about 6×10^5 dpm/ml, during early operation. This increase by a factor of three may be of importance in indicating progressive metallurgical deterioration of core components. It was further noteworthy that increase in reactor power of about 60% to 4.7 mw increased steady state Na-24 activity levels more than 120% to 4.72×10^6 dpm/ml. These levels of activity should be compared with those noted in Borax III and Borax IV.

Particularly after observation of failure of the B-Al poison strips, a number of attempts were made to detect the presence of Bin the reactor water, to no avail, although indications of the presence of Cd in the water had continually been noted. An observation made during the testimoney that a whitish deposit formed in the neighborhood of a leak in the vessel head analyzed high in boron content was confirmed by the Plant Chemist, but attributed by him to reaction of the steam with the

Annex R/4

70593 O—61——12

B-Fe shielding pellets used in the head rather than to deposition from the reactor water. Considering that this plant was the first reactor use of the alloy X-8001, rather surprisingly, no provision was incorporated in the plant for analyzing the reactor water for "crud" or suspended solids. The only observations recorded were those of total solids, dissolved and undissolved, present after the purification filter, and in general these showed the presence of less than 1 ppm solids. No smears have been taken of deposits upon the vessel or pipe walls.

The main conclusions drawn from this interview were the following:

1. Plant water chemistry was well controlled within specification limits.
2. Supplementary chemistry data which would have been of considerable value in development of the SL-1 type of reactor plant and in assessing the performance capabilities of the new type of cladding employed, the fuel elements, the burnable poison plates, the control rods, and other developmental items were greatly restricted both because of number of technical personnel assigned and equipment available.
3. The high levels of Na-24 activity noted in the reactor water as well as the increase in these levels may have been the first indices of metallurgical deterioration within the core.

II. Metallurgy of SL-1 Core Components
Date: January 18, 1960
Consultant to Investigating Board - B. Lustman
Argonne National Laboratory: -
Dr. F. Foote, Head, Metallurgy Division
Mr. D. Walker - (fabrication SL-1 fuel elements and poison strips)
Mr. S. Greenberg - (corrosion behavior fuel plates and poison strips)
Mr. N. Grant - (corrosion behavior fuel plates and control rods)
Dr. J. E. Draley - (corrosion X-8001 cladding)
Mr. W. Ruther - (corrosion X-8001 cladding)
Mr. W. Kann - (fabrication control rods)
Mr. J. H. Kittel - (irradiation behavior)

The original plan for the reactor core for the SL-1 plant called for utilization of nondevelopmental materials, fuel element designs, and fuel element fabrication techniques. Deviations from this intent were required because of the long core life at elevated temperatures; the aluminum cladding alloy X-8001 was employed to meet this requirement. In addition, it was desired to achieve adequate shutdown margin by the incorporation of B-10, originally as an additive to the fuel alloy. Since the technique of making such additions had not been developed, two development contracts were placed, one with Metals and Controls to develop methods of incorporating B in the fuel alloy by melting techniques, the other with Sylvania-Corning to develop powder-metallurgical methods of incorporating boron. The former subcontractor, in the course of the investigation, found that the addition of Ni, added to permit incorporation of boron in the fuel alloy, greatly improved the corrosion resistance of the latter, thus leading to the addition of

2% nickel to the SL-1 fuel alloy.[2] (W. E. Ruther and J. E. Draley - ANL-6053, November 1959) For the reasons listed below, it was subsequently decided to add the boron as a separate burnable poison strip rather than incorporated in the fuel alloy. These reasons were:

1. difficulty in development a technique for addition of boron to the fuel alloy;
2. undesirability, for radiation damage reasons, of intermixing boron and uranium; and
3. because of lack of a critical experiment for this core, uncertainty existed as to the boron content required in the fuel alloy.

Having made the decision not to disperse the poison uniformly in the fuel, a fabrication contract for manufacture of the fuel plates was awarded to the Babcock and Wilcox Corporation who utilized a fabrication technique similar to that employed for other enriched uranium aluminum-clad fuel plates. Several hundred plates were so fabricated; the great majority of these failed to meet ALPR standards either for bond quality or for surface finish. The contract was consequently cancelled and ANL initiated its own fabrication of the fuel plates. The technique utilized involved a pre-rolling eutectic diffusion-bonding treatment utilizing Si as the eutectic-forming medium, followed by a 4:1 hot reduction. The technique used is described in Ref. 2.

2) R. A. Noland - TID-7559, Part 1, p. 233, May(1958).

The method of fabricating the burnable poison strips involved mixing X-8001 and B powder, encasing the mixture in an X-8001 can and sealing, and hot extruding the mixture to a rectangular section which subsequently was rolled to size. This technique was also used for the Borax III reactor and is described in the Hazards Summary Report ANL-5744. It is noteworthy that, on finishing to size, the boron strips are essentially unclad, with 1 to 5 mils of aluminum wall thickness on the surface. The joining of the fuel plates to side plates for fabrication of the final assembly is also described in the Hazards Summary Report ANL-5744. After flanging the fuel elements, the flanges were machined from an initial thickness of 0.120 in. to 0.055 in. prior to spot-welding to the side plates. Thus one of the bonds to the fuel was exposed to water at a nominal distance of only one-tenth inch from the fuel.

The fabrication of the core alloy and nondestructive inspection of the various fuel plate components are described in Refs. 3, 4 and 5. These reports reveal that indeed a high quality bonded plate was achieved and that considerable care and exacting inspections were used. In addition, coupons were sheared from each end of the final plate and subjected to corrosion life tests in 550° F water. These tests showed that the corrosion quality of the cladding met all the requirements for this alloy. However, occasional blisters were noted

3) R. L. Salby and W. R. Burt, Jr. - ANL-5950, Dec. 1959
4) W. J. McGonnagle, W. N. Beck, and N. Lapinski - ANL-5951, Aug. 1959
5) W. J. McGonnagle and R. B. Perry - ANL-5944, December 1959

at the bond area on the edges of the coupons. These blisters are attributed to local high concentrations of the Si bonding agent which subsequent work has shown as detrimental to the hot water corrosion resistance of aluminum alloys. There appears to be little doubt that the fission product activity noted in SL-1 plant arose from corrodible high Si content fuel bond defects probably exposed at the machined flanged edge.

Mr. D. Walker of ANL was present at almost all occasions when fuel elements were pulled from the SL-1 core for interim examinations. He was present at the September 1960 examination when failure of the B-Al poison strips was noted together with CE Idaho Site personnel and Mr. Murtha of the CE Windsor plant. He reported that the fuel element surfaces were remarkably clean and free of corrosion product as evidenced by the observation of fingerprints and tape markings still visible from the initial insertion. As a result of the observations of poison strip buckling and fracture, some corrosion tests were initiated at ANL. The main results of these tests are summarized below:

1. Fuel plates of the SL-1 type grew one inch in their 27 inch length and also bowed on corrosion testing in 600° F water; similar growth was not noted at 450° F.
2. B-Al strips 20 inch in length grew 0.035 inches on testing for 14 days in 600° F water; X-8001 strips grew 0.117 inches in length.

3. B-Al strips tack-welded to X-8001 plates bowed 0.060 inches when corrosion tested 14 days in 500° F water and 0.118 inches when tested in 600° F water.

It is thus apparent that corrosion of the SL-1 fuel elements, unaccompanied by irradiation, would cause the poison plate bowing observed during the interim examinations.

The good corrosion behavior of X-8001 cladding in the SL-1 reactor was attributed to the good control of water chemistry which is feasible in a large system and to the large area of aluminum exposed relative to the water volume. It was estimated that the corrosion rate of the cladding was probably less than 0.001 - 0.002 in/year. Some experiments were reported in which massive pieces of X-8001 alloy were exposed in 1000° F steam in contact with a thermocouple. From the observation that little or no temperature rise was observed during the corrosion attack, the conclusion was drawn that rapid, auto-catalytic reaction of this alloy with steam would not be noted at exposure temperatures at or below 1000° F.

Testimony reflected that corrosion tests of aluminum - cadmium - aluminum sandwich samples at 420° F for 125 days showed that such sandwiches corroded with a maximum weight loss of the cadmium of 1-2 mg/cm^2-month. Cadmium dissolved in the autoclave water to concentrations of about 3 mg/l, and an increase in water pH from an initial

value of 7 to a level of 9 was noted. It was speculated that under the static conditions obtaining within an SL-1 control rod, such water conditions would not greatly affect the corrosion rate of the aluminum cladding.

The design of the SL-1 control rods was discussed and the intentional opening of the interior of the rod through the rod extension was pointed out. ANL analysis of Cd operational temperatures in the SL-1 application indicated that these temperatures were well below the melting point of Cd. The riveted connection at the top of the rod extension piece was pointed out as the probable point of failure in case the rod were dropped on the shrouds.

Mr. Kittel discussed further results of the irradiation of SL-1 fuel plates in the ANL-2 loop in MTR discussed in Ref. 6 and additional tests described in an internal memo (Ref. 7). The failure observed in the test described in Ref. 6 was attributed to poor loop operating conditions, and consequent high corrosion rates and was not considered significant to SL-1 operation. An additional plate has since been irradiated in this facility and did not fail, although similar high corrosion rates were observed. Also described in Ref. 7 are low temperature irradiations of 24 SL-1 type plates. These showed a density decrease of about 3%/atom percent burnup which is normal for metallic

6) A. P. Gavin and C. C. Crothers - ANL-6180 - July 1960
7) J. H. Kittel - ANL-FF-692a, Jan. 17, 1961

fuel alloys. Fuel swelling was observed in the experiments described in Ref. 6 at a burnup of 1 atom percent. This was ascribed to operation of the fuel at a temperature of 840° F, as a result of the heavy oxide film built up on the surface. The "dry" conductivity of this oxide was measured to be 0.56 BTU hr-ft-°F; however, in water the thermal resistance of the oxide could be markedly less and the calculated fuel temperatures correspondingly lower. The failed sample described in Ref. 6 was viewed by Mr. Chernack of CE, Windsor, late in 1959. Argonne's view was that the failure was not significant to SL-1 operation.

Discussions were held concerning the failure of the B-Al poison strips and the lack of test data. Corrosion data for the unirradiated material were considered to be adequate to validate its use. It was stated that the state of the art concerning irradiation behavior of this material was such that "we considered it neither to be a problem nor not to be a problem."

The principal conclusions drawn from these interviews were the following:

1. The selection of cladding materials and fabrication techniques employed were such as to ensure delivery of a high quality fuel element.

2. The pre-irradiation corrosion tests were inadequate to reveal probable penetration to the fuel alloy through corrodible bond defects, and the fuel element assembly design was faulty in

permitting close approach of the fuel alloy to the fuel element perimeter.

3. The fuel plate irradiation validation program was restricted in scope, but probably would have been adequate had not the in-pile failure occurred.

4. The dimensional instability in corrosion testing of the fuel element with its tacked-on poison strip was not revealed in pre-irradiation testing, probably because the final assembly of the poison strip at the site precluded such testing.

5. The design and validation program for the control rods was probably adequate for the SL-1 application.

6. The selection of unclad B-Al strips for the poison application, without prior or concurrent irradiation evaluation, does not appear to be defensible, certainly not with present knowledge, and probably not with the information available at the time of the selection.

7. The highly developmental nature of the various core components such as the cladding fuel alloy and fabrication method, which received their first utilization in SL-1, the control rods, whose design and operation conditions were unique to SL-1, and the poison strips, of a type which had never previously been utilized, appears incompatible with the use of the SL-1 facility without an extensive accompanying test, evaluation, and examination program.

Annex R/13

ANNEX R

METALLURGICAL EVALUATION OF SL-1 CORE COMPONENTS

Fuel Elements

The SL-1 fuel elements have shown in irradiation tests only a normal amount of growth or swelling (3 per cent per atom per cent) at burnups up to 1 atom per cent (out of 1.7 a/o burnup possible in the SL-1 fuel) and calculated temperatures of 840° F. Since, at the time of the incident, the core had accumulated only about 36% of its burnup (corresponding to a maximum fuel burnup of .36 x 1.7 = 0.6%), and since all evidence points to restricted formation of insulating corrosion films on the cladding, no gross distortion or swelling of the fuel elements is anticipated.

On the other hand, it is probable that the fuel elements defected, exposing the fuel alloy to water at small discrete points early in life. The evidence for this is the following:

a. The fuel element flanges were machined, exposing one bond line to water at a nominal distance of 0.10 inches from the fuel alloy.

b. Corrosion tests have shown bond-line attack at discrete points corresponding to regions of high silicon content.

c. Fission product activity levels have remained constant since plant startup, indicating that surface contamination is not responsible.

d. Fission products show a smaller ratio of short-to long-lived isotopes than is found in fission, indicating that the isotopes reach the coolant through a tortuous path, such as a corroded bond line.

Since no defected irradiation tests have been performed, it is not possible to assess the effect of such a fuel element condition. However, from the fact that fission product activities have not increased, it may be inferred that no gross failures due to such operation have occurred. No effects related to the fuel elements significant to the causation of the accident are known.

2. Burnable Poison Strips

Two effects may cause gross distortion of the poison strips; these are irradiation growth due to boron depletion and corrosion growth due to formation of highly stressed oxide films on the surface of the thin poison strips. It is probable that the buckling observed August 27, 1959, at about 200 MWD of operation, is caused by corrosion growth. At this time, the core had accumulated about 10% of its life, although it had undergone intermittent hot operation for almost a year; the burnup of the boron would not be expected to be more than 0.1

at. percent. The volume charge accompanying this burnup (about 0.2 per cent) would probably be insufficient to cause bowing. On the other hand, corrosion tests at 500° F have shown 0.060 in bow in 14 days of test in a configuration simulating the attachment of boron strips in SL-1. Further evidence for this supposition is shown by the rod bank positions which began deviating from the theoretical curve only after 300 MWD of operation.

Corrosion growth would not be expected greatly to embrittle the poison strips. On the other hand, irradiation would markedly decrease ductility at boron depletions above 0.1 atom per cent (about 1 a/o boron depletion can occur in the SL-1 poison strips). Corrosion of the strips would tend to become increasingly more rapid, the more the plates become embrittled and cracked, because of the exposure of new corroding surfaces at the crack. The increase of aluminum surface exposed would cause additional corrosion at an accelerated rate; the increase in Na^{24} activity in the coolant from about 6×10^5 dpm/ml early in 1959 to 2×10^6 late in 1960 may be indicative of such progressive change in the burnable poison strips. It is plausible to postulate that progressively more rapid deterioration of the poison strips during the 9/30 to 12/23 period directly relates to the cause

of the incident. On the other hand, rapid corrosion may not have occurred until the boron had become almost completely depleted, in which case its loss would not be significant.

3. Control Rods

The design of the SL-1 control rods permitting access of the coolant to the rod interior has two principal consequences;

a. Cd corrosion products can be leached from the interior of the fuel rod into the system, thense to be removed in the purification system.

b. The attack of the Al cladding from the interior may be accelerated by the formation of a high pH water chemistry in the rod interior.

Measurement of the corrosion rate of Cd in 420° F water yields a maximum rate of about 1 mg/cm^2 month. This corrosion rate is compatible with a recorded observation of Cd-115 activity in 3600 gal. of SL-1 liquid wastes of 44 uc. The rate of Cd lost from the rods would then have an approximate value of 60 gms/mo or about 0.1% of the contained Cd per month. This cadmium loss is unlikely to have a significant effect on the incident.

Likewise, under the static corrosion conditions obtaining within a control rod, and in consideration of the reported beneficial effect of dissolved cadmium salts on the corrosion

of aluminum, it is unlikely that any significant deleterious corrosion of the Al cladding on the control rods has occurred.

4. Cladding

No deleterious effects have been uncovered with respect to the behavior of the X-0001 cladding stock; this material, in fact, appears to have behaved better than anticipated. The only detrimental observation has been the corrosion growth observed as a result of formation of heavy, highly stressed oxide films at elevated temperatures of exposure.

On the other hand, the use of 2S aluminum as cladding for the cadmium strips inserted during the September 30, 1960, shut down is highly questionable but is hardly significant for the SL-1 incident. At temperatures of 420° F, it has been observed that 2S aluminum is on the verge of the temperature range in which rapid blistering attack and disintegration occurs. Thus, blistering occurs in a few hours at 600° F, in several weeks at 500° F, and possibly in six to 12 months at 420° F. Thus, Borax-III operated for six months at 420° F using 2S-Al cladding. Thus, while use of this material as cladding for the Cd poison strips was questionable for long life exposure probably only 0.001 in. of metal was corroded during the two months of its use and hence its corrosion is not related to the incident.

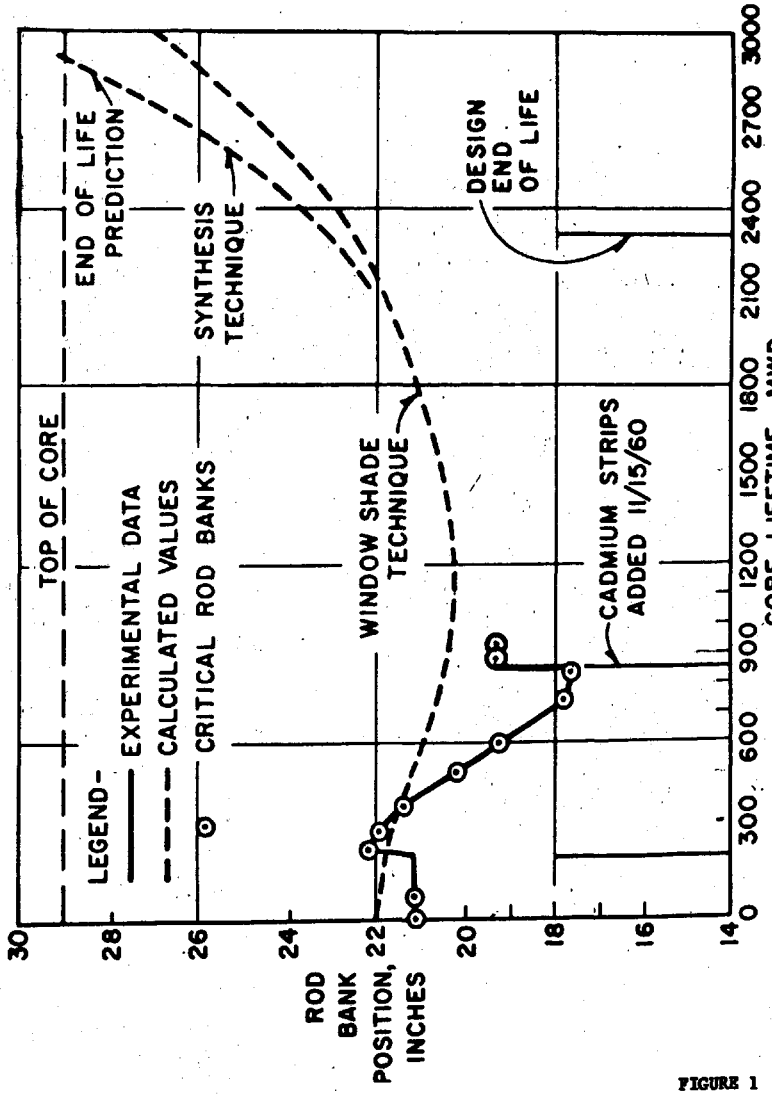

FIGURE 1

CRITICAL ROD BANK POSITION
WITH EQUILIBRIUM XENON CONCENTRATION AT 2.56 MW

FIGURE 1

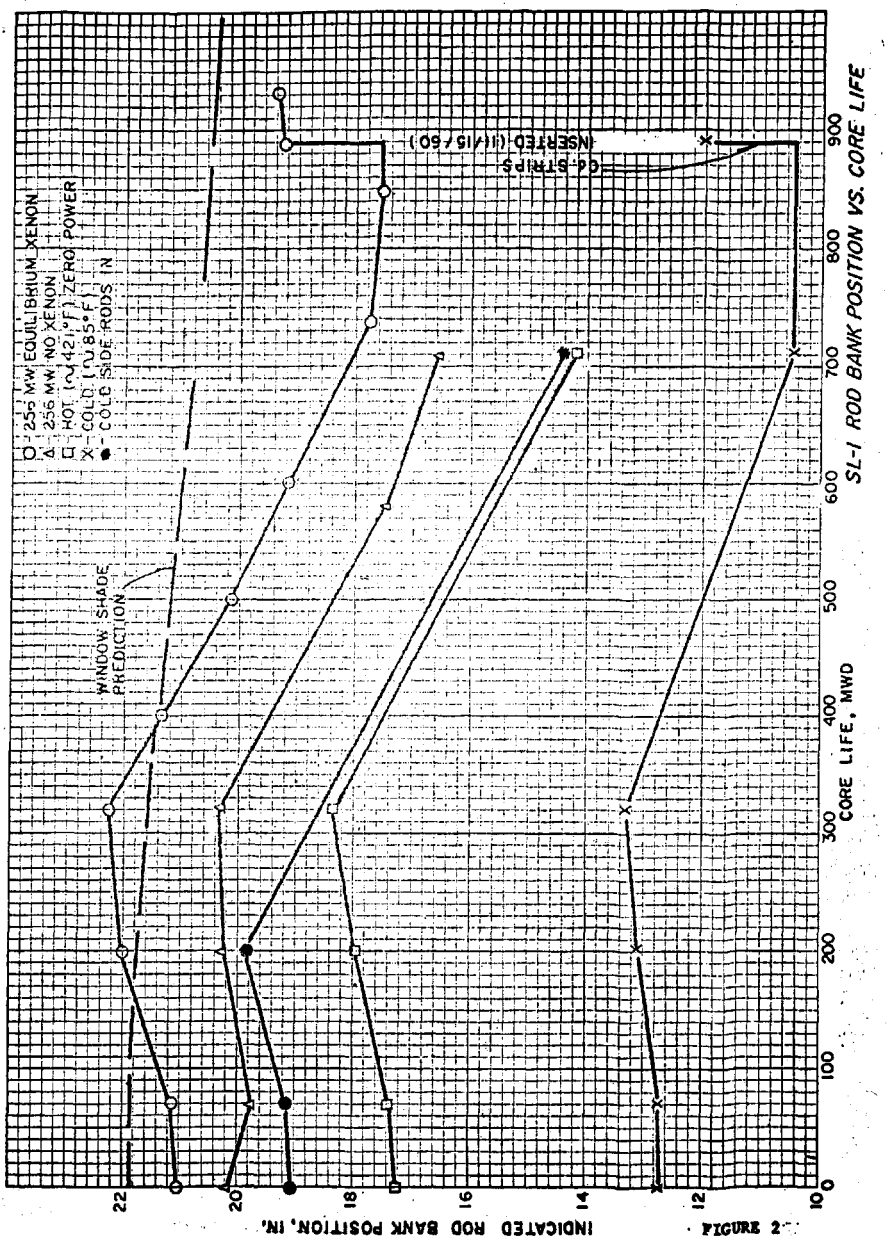
SL-1 ROD BANK POSITION VS. CORE LIFE
CORE LIFE, MWD
INDICATED ROD BANK POSITION, IN.
0
100
200
300
400
500
600
700
800
900
10
12
14
16
18
20
22
○ - 256 MW EQUILIBRIUM XENON
△ - 256 MW NO XENON
□ - HOT (~421°F) ZERO POWER
X - COLD (~85°F)
● - COLD SIDE RODS IN
WINDOW SHADE PREDICTION
Cd. STRIPS INSERTED (11/15/60)

FIGURE 2

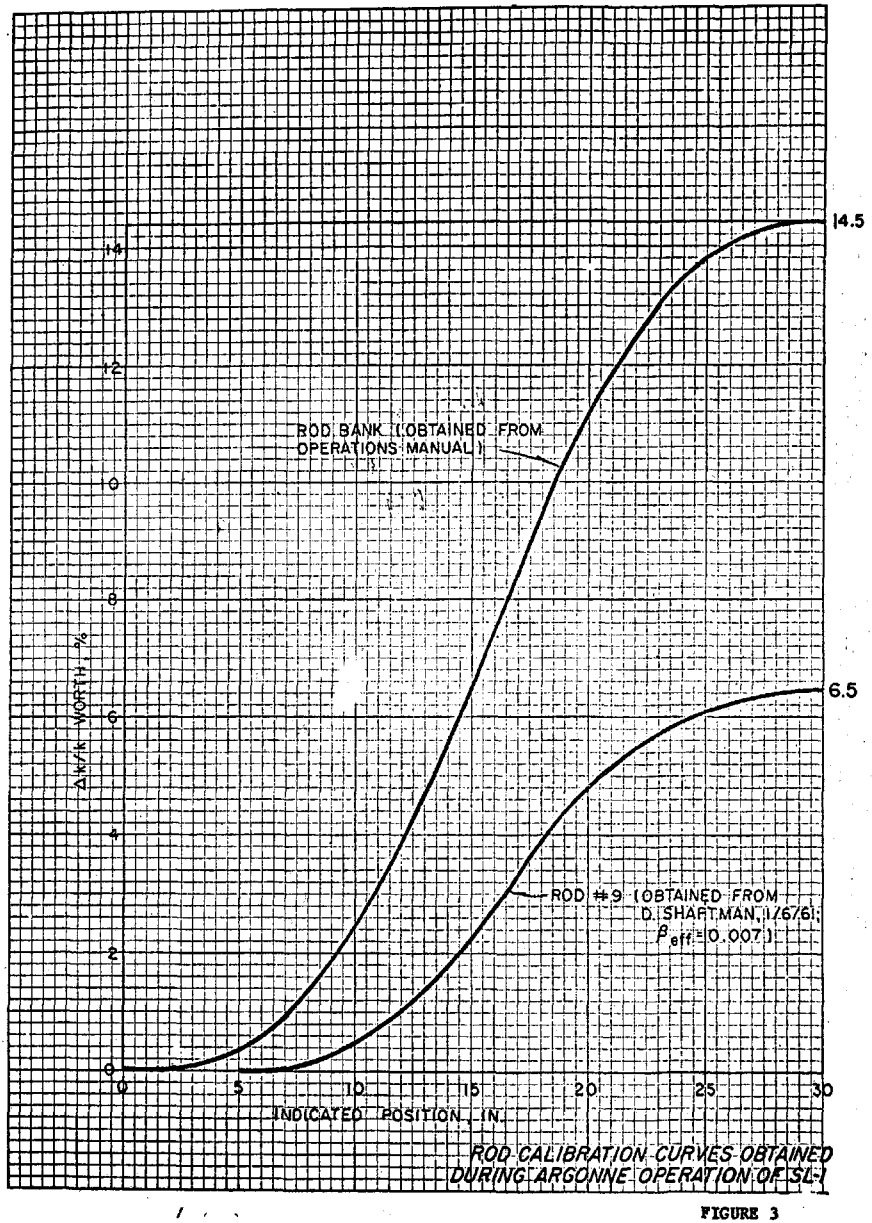

ROD CALIBRATION CURVES OBTAINED DURING ARGONNE OPERATION OF SL-1

FIGURE 3

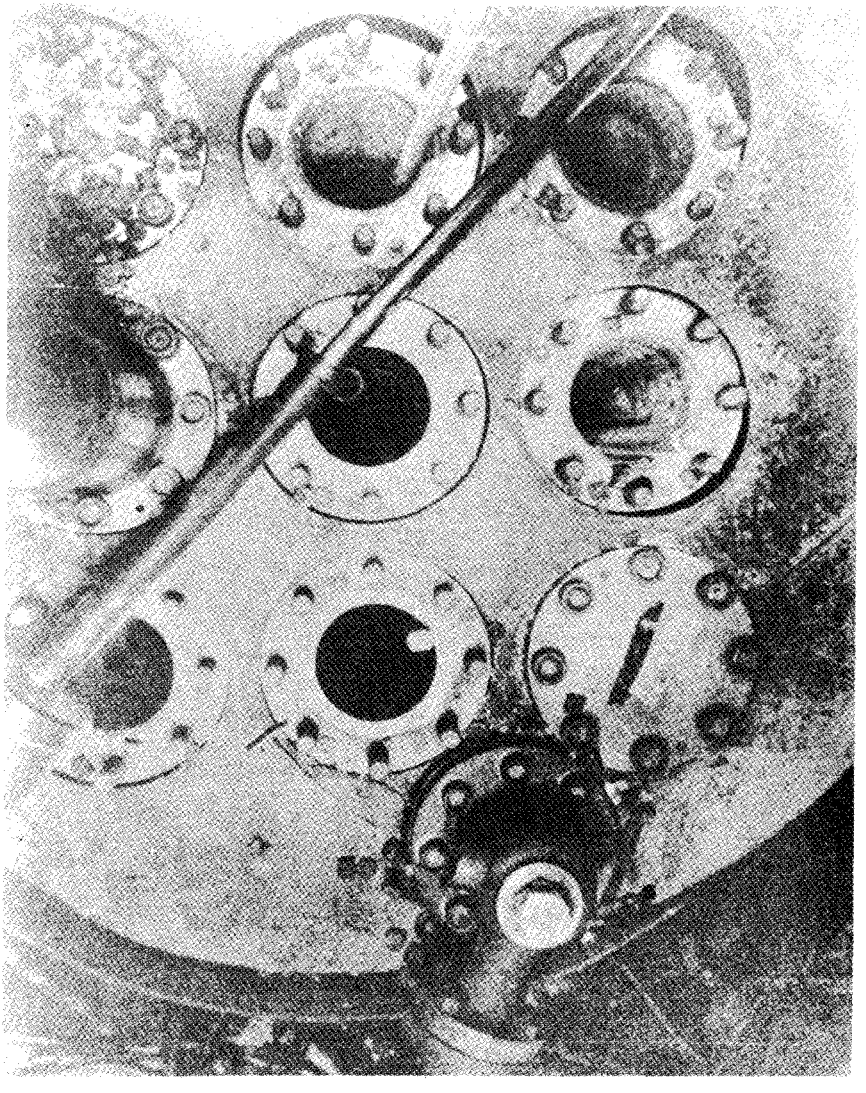

FIGURE 4

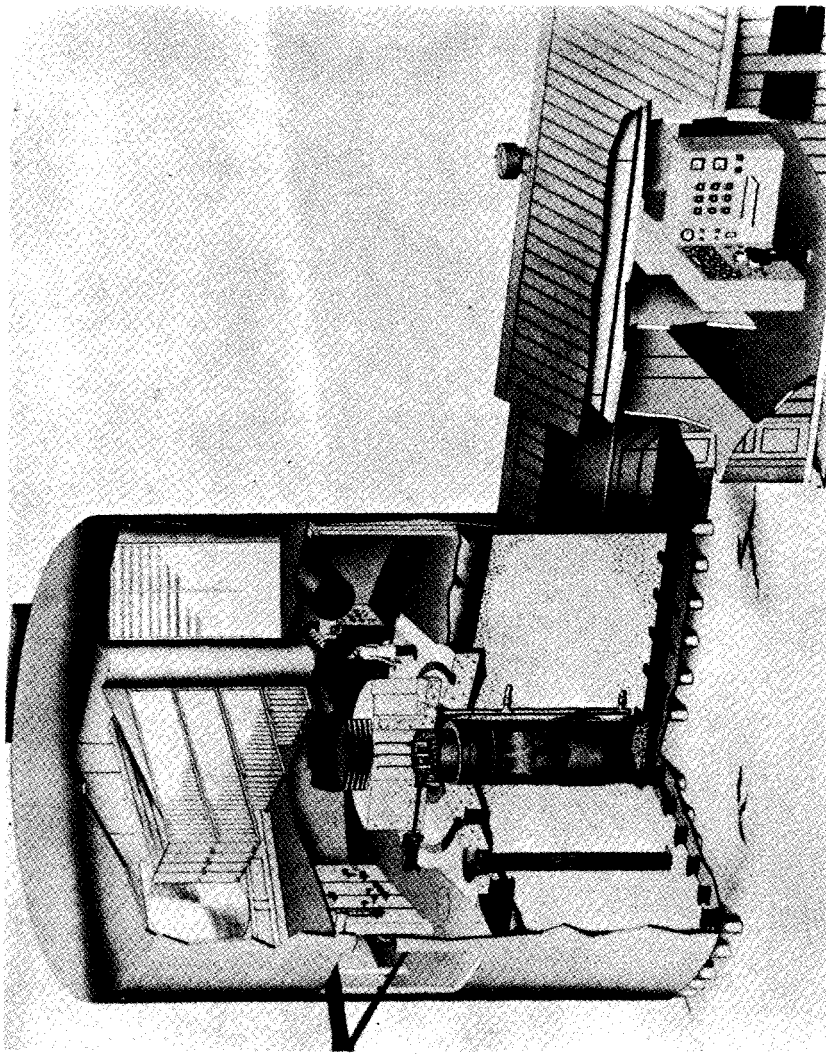

FIGURE 5

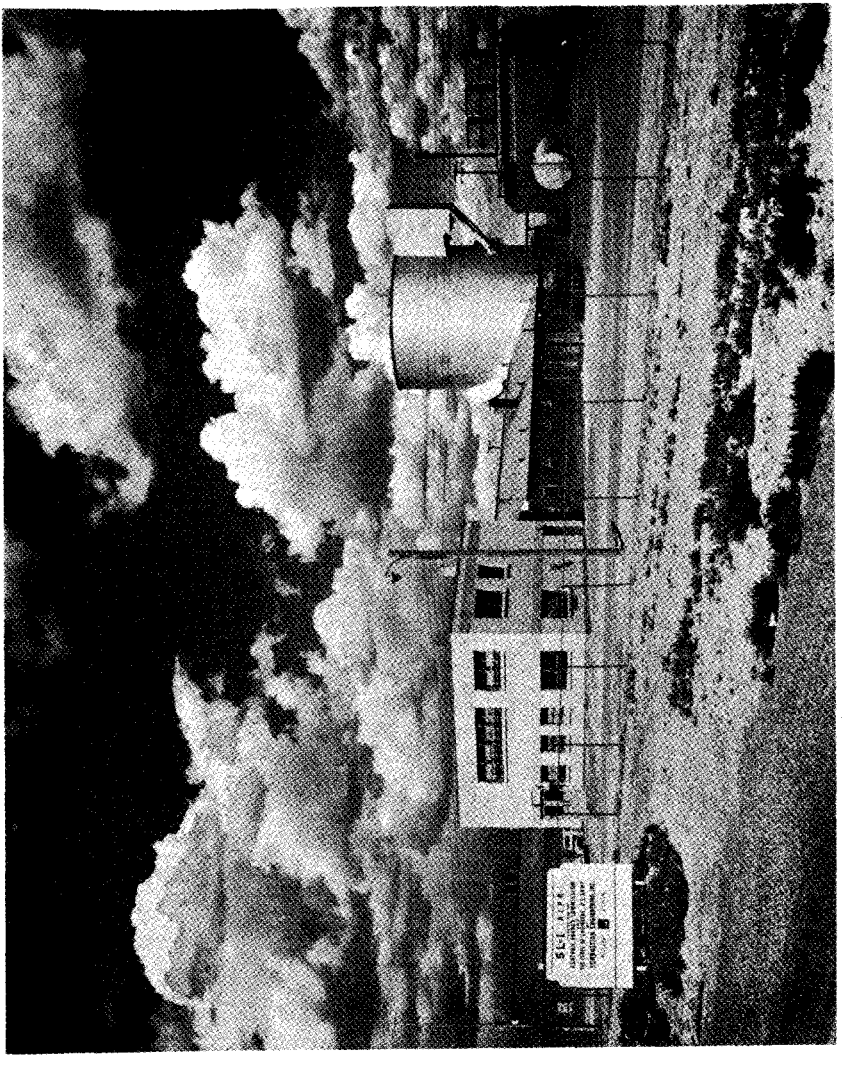

FIGURE 6

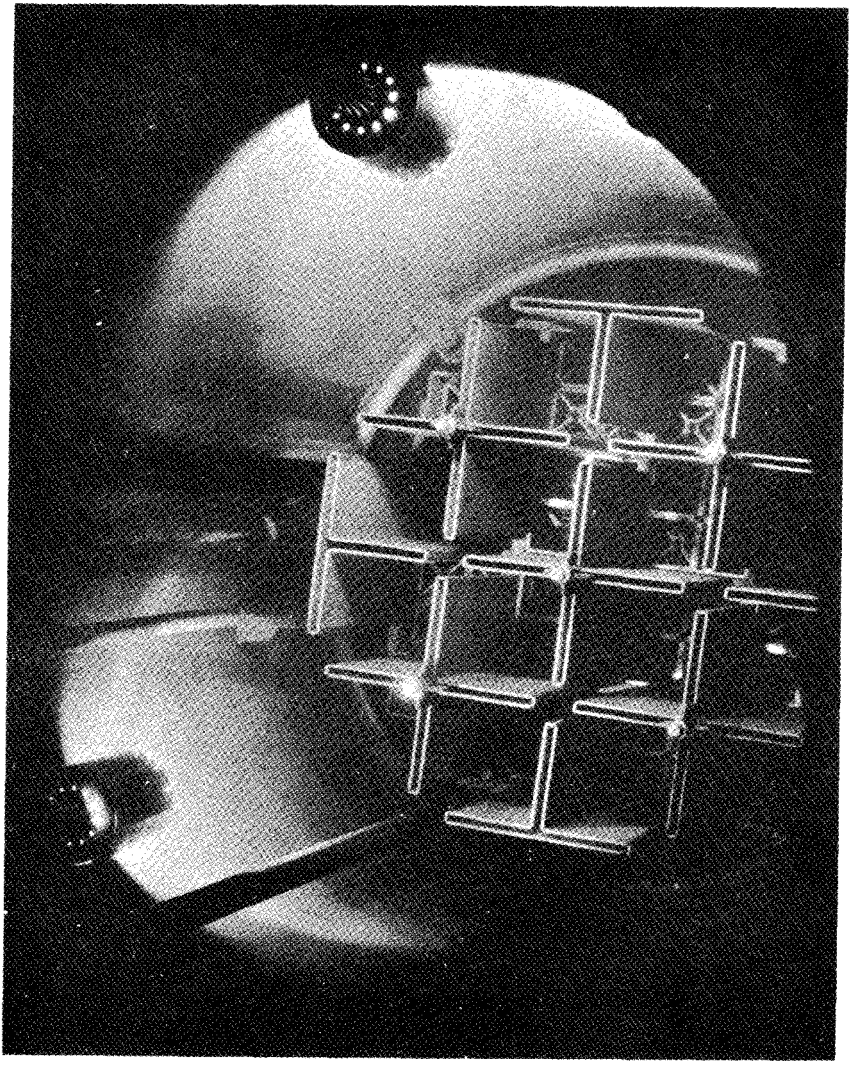

FIGURE 7

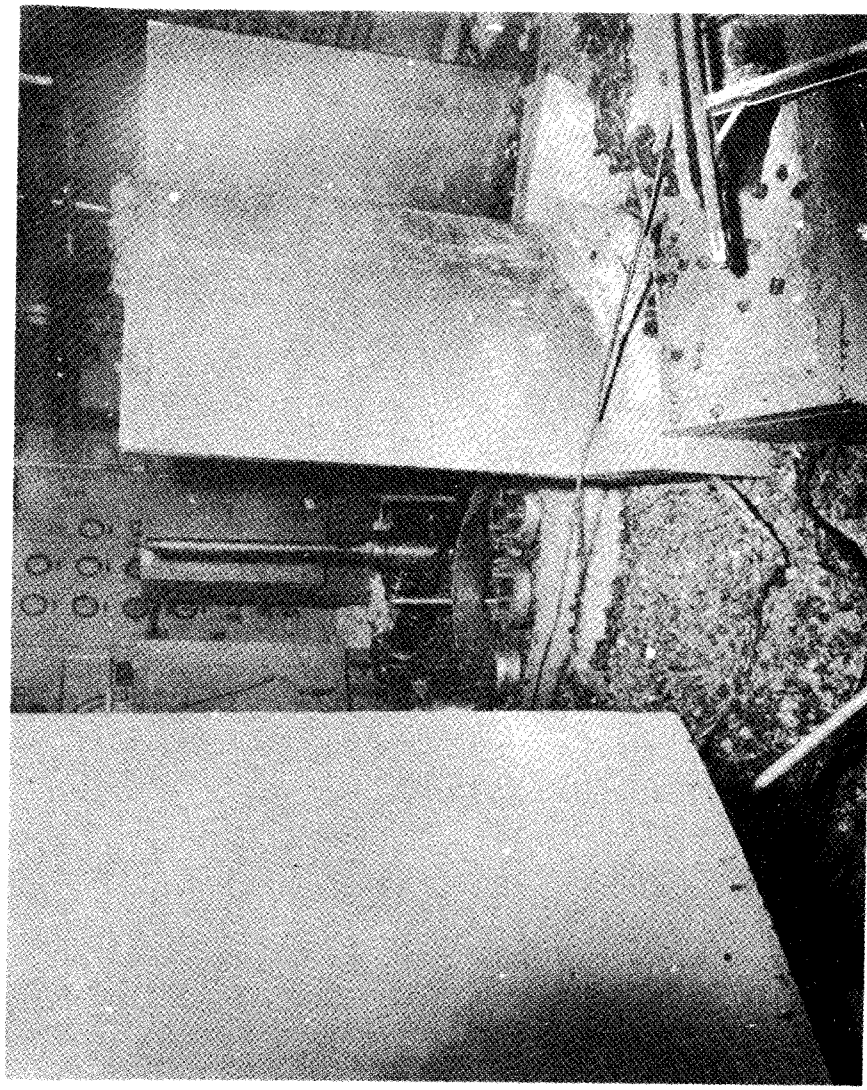

FIGURE 8