CHAPTER 7

INSTRUMENTATION AND CONTROLS

INTENTIONALLY BLANK

CONTENTS

ACRONYMS/ABBREVIATIONS 7-7

DEFINITIONS 7-9

7. INSTRUMENTATION AND CONTROLS 7-13

7.1 Introduction 7-13

7.1.1 Identification of Safety-Related Systems 7-13
7.1.2 Identification of Safety Criteria 7-15

7.2 Reactor Shutdown System 7-18

7.2.1 Description 7-18
7.2.2 Analysis 7-34

7.3 Engineered Safety Features Actuation Subsystems 7-56

7.3.1 RSS Primary Pump Shutoff System and RSS Pressurizing and Gland Seal Pump Shutoff System 7-56
7.3.2 Emergency Firewater Injection Actuation Subsystem 7-60
7.3.3 Radiation Monitoring and Seal System 7-66
7.3.4 Description, Vessel Vent System 7-71
7.3.5 LOCA Primary Coolant Pump (PCP) Shutoff System 7-74

7.4 Systems Required For Safe Shutdown 7-92

7.4.1 Control of the Outer Shim Control Cylinders 7-92
7.4.2 Emergency Backup Manual Scram and Reverse 7-93

7.5 Safety-Related Display Instrumentation 7-96

7.5.1 General 7-96
7.5.2 Reactor Shutdown System 7-96
7.5.3 ESF Display Instrumentation 7-99
7.5.4 N-16 System 7-101
7.5.5 Log Count Rate Metering System 7-101
7.5.6 Log-N Period 7-101
7.5.7 Water Power Calculator System 7-102
7.5.8 Emergency Firewater Canal Makeup System 7-102

7.6 All Other Instrumentation Systems Safety-Related or Important to Safety 7-105

7.6.1 Reactor Data Acquisition System 7-105
7.6.2 N-16 System 7-109
7.6.3 Log Count Rate Metering System 7-111
7.6.4 Log-N Period System 7-113

7.6.5 Water Power Calculator System 7-115
7.6.6 Emergency Firewater Canal Makeup System 7-117
7.6.7 Emergency Pump 670-M-10 and 670-M-11 Hardwired Auto Start 7-118

7.7 Systems Not Required for Safety 7-124

7.7.1 Reactor Control 7-124
7.7.2 Plant Control 7-128
7.7.3 Log-N Period 7-129
7.7.4 Surveillance and Test System 7-129
7.7.5 In-Vessel Post Accident Monitoring System 7-130
7.7.6 Neutron Level Channel No. 8 7-131

7.8 References 7-138

FIGURES

7.2-1. Reactor Shutdown System block diagram 7-40

7.2-2. Typical Reactor Shutdown System vessel differential pressure subsystem 7-41

7.2-3. Typical Reactor Shutdown System vessel inlet pressure subsystem 7-42

7.2-4. Typical Reactor Shutdown System vessel outlet pressure subsystem 7-43

7.2-5. Typical Reactor Shutdown System emergency flow discharge subsystem 7-44

7.2-6. Typical Reactor Shutdown System quadrant Nos. 1, 2, 3, and 4 differential temperature subsystem 7-45

7.2-7. Typical Reactor Shutdown System inlet temperature subsystem 7-46

7.2-8. Typical Reactor Shutdown System outlet temperature subsystem 7-47

7.2-9. Typical Reactor Shutdown System vessel level subsystem 7-48

7.2-10. Typical Reactor Shutdown System neutron level subsystem 7-49

7.2-11. Typical Reactor Shutdown System fission break subsystem 7-50

7.2-12. Typical Reactor Shutdown System wide-range neutron subsystem 7-51

7.2-13. Typical Reactor Shutdown System seismic level subsystem 7-52

7.2-14. Typical Reactor Shutdown System manual scram subsystem 7-53

7.2-15. Typical Reactor Shutdown System experimental loops scram subsystem 7-54

7.2-16. Typical Reactor Shutdown System emergency pumps recirculation flow subsystem 7-55

7.3-1. Primary Pump Shutoff System 7-85

7.3-2. Pressurizing and Gland Seal Pumps Shutoff System 7-86

7.3-3. Emergency Firewater Injection System detector and logic diagram7- 87

7.3-4. Emergency Firewater Injection System Actuation Subsystem logic diagram 7-88

7.3-5. Radiation Monitoring and Seal System diagram, Part 1 7-89

7.3-6. Radiation Monitoring and Seal System diagram, Part 2 7-90

7.3-7. LOCA Primary Coolant Pump (PCP) Shutoff System 7-91

7.4-1. Emergency backup manual scram 7-95

7.6-1. ATR Reactor Data System block diagram (simplified) 7-119

7.6-2. N-16 flow system (typical channel) 7-120

7.6-3. N-16 system block diagram 7-121

7.6-4. Log Count Rate System 7-122

7.6-5. Log Count Rate System block diagram 7-123

7.7-1. Regulating Rod Servo Control System 7-132

7.7-2. Control Power Reduction System 7-133

7.7-3 ATR Reactor Control Permissive System 7-134

7.7-4. ATR Safety Rod Permissive System 7-135

7.7-5. Regulating Rod Permissive System 7-136

7.7-6. ATR Neck Shim Rod Permissive System 7-137

TABLES

7.2-1. RSS performance requirements for full-scale range and allowable trip-point error 7-38

7.2-2. RSS environmental specifications 7-39

7.3-1. Primary pumps shutoff with high vessel-differential-pressure condition 7-79

7.3-2. Emergency Firewater Injection Actuation Subsystem performance requirements 7-79

7.3-3. ATR environmental specifications for the Emergency Firewater Injection System 7-80

7.3-4. ATR Emergency Firewater Injection Actuation Subsystem protective functions 7-81

7.3-5. List of protective functions for the Containment Isolation Subsystem stack exhaust radiation monitors 7-81

7.3-6. ATR Subsystem performance requirements for the Containment Isolation Subsystem stack exhaust radiation monitors 7-81

7.3-7. ATR environmental specification ranges for the Radiation Monitoring and Seal System (RMSS) 7-82

7.3-8. ATR environmental specification ranges for the Vessel Vent System 7-83

7.3-9. ATR LOCA Primary Pump Shutoff System Protective Functions 7-83

7.3-10. ATR LOCA Primary Pump Shutoff System Environmental Specifications 7-84

7.5-1. Summary of PPS display instrumentation 7-103

ACRONYMS/ABBREVIATIONS

ac	alternating current
AEC	U.S. Atomic Energy Commission
ASME	American Society of Mechanical Engineers
ANSI	American National Standards Institute
ATR	Advanced Test Reactor
BBPS	battery-backed power system
CDS	Console Display System
CFR	Code of Federal Regulations
CHF	critical heat flux
CLLC	contact-to-logic-level converter
CLOFA	complete loss of flow accident
CLOHS	complete loss of heat sink
CPRS	Control Power Reduction System
cps	counts per second
DAC	data acquisition computer
DAN	data analysis computer
dc	direct current
DCS	distributed control system
DNB	departure from nucleate boiling
DOE	U. S. Department of Energy
EBR	emergency backup reverse
EBS	emergency backup scram
EFIS	emergency firewater injection system
ESF	engineered safety features
ESFAS	Engineered Safety Features Actuation Subsystem
FIS	firewater injection system
FMEA	failure mode and effects analysis
GDC	general design criterion
gpm	gallons per minute
IEEE	Institute of Electrical and Electronics Engineers
LCO	limiting condition for operation
LCRM	log count rate metering
LOCA	loss of coolant accident
MW	megawatt

N_F	The reactor operating steady power level (pressurized operation, up to and including 250 MW). The power level N_F represents may change, not only for each reactor operating cycle but also during an operating cycle. During a scheduled startup, N_F is the projected/anticipated full operating power level. Actual experiment requirements or operational considerations may necessitate small deviations from the projected value. The neutron level and wide range neutron subsystems are adjusted such that upon reaching N_F the indication is equal to or greater than 100%.
N_L	For power operation and low power operation, a power level which corresponds to 1% N_F. For depressurized operation, the maximum allowed reactor power level (500 kW).
NBS	National Bureau of Standards
NE	U.S. Department of Energy Nuclear Energy Programs
NFPA	National Fire Protection Association
NRC	U.S. Nuclear Regulatory Commission
O&MM	Operating and Maintenance Manual
OSCC	outer shim control cylinder
PCP	primary coolant pump
PCS	primary coolant system
PPS	plant protective system
PRA	probabilistic risk assessment
psia	pounds per square inch absolute
psid	pounds per square inch differential
RCCC	rod clutch coil controllers
RCR	reactor control room
RDAS	reactor data acquisition system
RDT	Reactor Development and Technology
RMS	radiation monitoring system
RMSS	radiation monitoring and seal system
RSS	reactor shutdown system
SATS	Surveillance and Test System
SDD	system design description
SFA	single failure analysis
SSE	safe shutdown earthquake
UPS	uninterruptible power supply
VVS	Vessel Vent System
WC	water column

DEFINITIONS

Accuracy. A number defining the specified allowable or observed limit of error (maximum error through the span of the instrumentation measurement). This error may be expressed as instrument scale units, units of the measured variable, the ratio (expressed as a percentage) of error to the instrument range, the instrument span, or full scale.

Administrative Control. Rules, orders, instructions, procedures, policies, practices, and designations of authority and responsibility.

Analog Accuracy. The difference between the measured buffered data system output of the channel and the desired buffered data system output based on the actual value of the variable at design center conditions.

Bypass:

> *Maintenance Bypass.* Removal of the capability of a channel, component, or piece of equipment to perform a protective action due to a requirement for replacement, repair, test, or calibration.
>
> *Operational Bypass.* Inhibition of the capability to accomplish a safety function that could otherwise occur in response to a particular set of generating conditions.

Condition 1, 2, 3, or 4: The American Nuclear Society accident-frequency categories. The American Nuclear Society categories and the assumed correspondence to the Design Basis Report classification are listed below. The accident frequency classification used in the Design Basis Report are based on the guidelines contained in RDT C 16-1T. These accident frequency classifications were: anticipated, unlikely, and extremely unlikely.

> *Condition 1.* Normal operation and operational transients: Normal Operation
>
> *Condition 2.* Faults of moderate frequency: Anticipated
>
> *Condition 3.* Infrequent faults: Unlikely
>
> *Condition 4.* Limiting faults: Extremely unlikely.

Design Basis Events. Postulated events used in the design to establish the acceptable performance requirements for the structures, systems, and components.

Error. A number expressing the difference between the indicated or observed value of a measured variable and the true value of that variable.

Essential Performance Requirements. Those requirements that must be met by the device, assembly, or module if it is to carry out its part in accomplishing a protective function.

Failure. The inability of a device to meet one or more of its essential performance requirements. Failures are of two types:

Unsafe failure. A failure that precludes the device from providing an immediate trip.

Safe failure. A failure that results in an immediate trip.

Instrument Span. The interval between the lower and upper limits of a variable in which an instrument provides a continuous indication or measurement, a protective function, or both.

Plant Protective System (PPS). Those active devices, with the associated equipment that initiates their action, whose function in conjunction with passive structures of the plant is necessary to prevent unacceptable release or spread of radioactive materials by preventing plant variables or conditions from reaching their respective safety limits, or mitigating the consequences of exceeding safety limits. The PPS also prevents unacceptable plant damage in accordance with limits specified by the contractor. The PPS includes the Reactor Shutdown System (RSS) which cause the release of the safety rods and the Engineered Safety Features (ESF). The RSS subsystems are identified in Section 7.2. The ESFs are identified in Section 7.3.

Redundant Equipment or System. A piece of equipment or a system that duplicates the essential function of another piece of equipment or system to the extent that either may perform the required function regardless of the state of operation or failure of the other. Redundancy can be accomplished by the use of identical equipment, equipment diversity, or functional diversity.

Resolution. The smallest discernible change in the channel output or setpoint value, expressed in the same terms as accuracy. For an analog channel output, the smallest discernible change will be defined as 3 dB above average channel noise level with zero signal input within the analog bandwidth. For a digital channel output, the smallest discernible change will be defined as a unit change in the least significant bit. For a setpoint value, the smallest discernible change will be defined as the smallest value by which a setpoint may be changed. All these changes are referenced to the measured variable. This requirement does not apply to indicators and recorders.

Response Time:

Channel. The time between the occurrence of an unacceptable value of the measured variable at the channel sensor and the occurrence of the tripped (abnormal) state of the channel comparator output. An unacceptable value of the measured variable is defined as a value that exceeds (i.e., is above or below, depending on type of setpoint) the channel setpoint. The time required for response by the sensor (and its enclosure or housing, where appropriate) is included in the value of channel response time. Unless stated otherwise, the change of the measured variable to an unacceptable value is assumed to occur in zero time (i.e., is a step change).

Logic. The time between the occurrence of a sufficient number of channel trip signals and the occurrence of the tripped condition of the logic output to the appropriate Reactor Shutdown System (RSS) actuator controllers. Logic response time shall include any delays incorporated into the logic.

Actuator Controller. The time between the occurrence of the logic trip at the input to an actuator controller and the de-energization or energization of the actuator circuitry.

Actuator. The time between the occurrence of the de-energization or energization of the actuator circuit and the start of actuator action; e.g., start of safety-rod motion or start of pump coastdown.

Total RSS Response Time. The sum of the appropriate channel, logic actuator controller, and actuator response times for a given event.

Saturation. The limit at which a further change in the input signal no longer produces a change in the output.

Seal-In. Retention of a device in the tripped condition regardless of the value of the variable that originally initiated the tripped condition.

Sensitivity. The ratio of the instrument channel output change to the specified or observed change in the input variable.

INTENTIONALLY BLANK

7. INSTRUMENTATION AND CONTROLS

7.1 Introduction

This chapter presents the various plant instrumentation and control systems by relating the functional performance requirements, design basis, system descriptions, design evaluations, and tests for each.

The primary purpose of the instrumentation and control system is to provide automatic protection and exercise proper control against unsafe and improper reactor operation during steady-state and transient power operations, and to provide initiation signals to mitigate the consequences of faulted conditions. Consequently, the information presented in this chapter emphasizes those instrumentation and control systems that are central to operating the Advanced Test Reactor (ATR) in a manner that ensures no undue risk to the health and safety of the public.

7.1.1 Identification of Safety-Related Systems

Safety-related instrumentation and control systems and their supporting systems must ensure the following conditions:

- The integrity of the primary coolant pressure boundary.
- The capability to shut down the reactor and maintain it in a safe shutdown condition.
- The capability to prevent or mitigate the consequences of accidents that could result in potential offsite exposure comparable to the guidelines exposure of 10 CFR Part 100 guidelines.

"Safety-related" is a broad designation, and includes significant subcategories of structures, systems, and components with respect to the ATR Facility. There are two subcategories for safety-related systems: (a) Plant Protective System (PPS) and (b) non-Plant Protective System (non-PPS). The master list of safety-related structures, systems, and components is presented in Appendix A of Chapter 3 (Design of Structures, Components, Equipment, and Systems). The safety-related instrumentation and controls are listed under the subheadings (a) Control Complex, (b) Emergency Firewater Injection System, (c) Fuel Storage and Handling, (d) Radiation Monitoring and Seal System, (e) Reactor Shutdown Systems, (f) Vessel Vent System, and (g) LOCA Primary Coolant Pump Shutoff System.

7.1.1.1 Plant Protective System. The Plant Protective System (PPS) consists of the Reactor Shutdown System (RSS) and the Engineered Safety Features (ESF). The RSS comprises instrument subsystems and logic that cause the release of the safety rods and RSS actuation of some ESF pump shutoff actions. The safety rod system comprises the safety rod drive assembly, the horizontal drive assembly, and the safety rod assembly. The safety rod system is a mechanical system, and is discussed further in Chapter 3. The ESF comprises six systems that include both instrumentation and mechanical components and equipment. Only the instrumentation required to actuate the equipment and systems of the ESF, the ESF Actuation Subsystem, is discussed in this chapter. Although Vessel Level Alarm System is considered an ESF system, it is not part of the ESF Actuation System.

The RSS is described in Section 7.2. Design bases for the RSS are described in Section 7.1.2.1.

The Engineered Safety Features Actuation Subsystem (ESFAS) is described in Section 7.3. The design basis for the ESFAS is described in Section 7.1.2.1.

The ESFAS comprises those instrumentation systems required to actuate the equipment and systems that mitigate the consequences of postulated design basis accidents. As described in Section 7.3, the engineered safety features requiring actuation are:

- Primary Pump Shutoff System
- Pressurizing-Pump and Gland-Seal-Pumps Shutoff System
- Emergency Firewater Injection System
- Radiation Monitoring and Seal System
- Vessel Vent System
- LOCA Primary Coolant Pump Shutoff System.

7.1.1.2 Systems Required for Safe Shutdown. The systems required for safe shutdown, and the corresponding design bases for those systems, are described in Section 7.4.

7.1.1.3 Safety-Related Display Instrumentation. The safety-related display instrumentation, and the corresponding design bases for those systems, are described in Section 7.5.

7.1.1.4 All Other Instrument Systems Safety-Related or Important to Safety. All other instrument systems safety-related or important to safety, and the corresponding design bases for those systems, are described in Section 7.6.

7.1.1.5 Systems Not Required for Safety. Systems not required for safety (i.e., systems not relied upon in the safety analysis to mitigate design-basis events), and the corresponding design bases for those systems, are described in Section 7.7.

7.1.1.6 Comparison with Other Plants. The ATR is an experimental reactor, not a power reactor, and differs from a power reactor in many ways. Some of the more significant differences related to plant safety are:

- The function of the secondary coolant system is that of a heat sink. Under normal operating conditions, long-term heat removal takes place by primary circulation by primary coolant pumps or emergency coolant pumps, and secondary circulation by secondary coolant pumps or utility coolant water pumps. This coolant water is backed by emergency heat removal using the Emergency Firewater Injection System (EFIS).
- The Primary Coolant System (PCS) operates at much lower temperatures and pressures.
- There is a confinement structure instead of a containment structure.

- No boron is injected in the ATR primary coolant, and the reactor can be shut down in one of two ways:
  - Inserting the safety rods.
  - Rotating the outer shim control cylinders (OSCCs) in toward the core.
- The Vessel Vent System (VVS), which provides primary system depressurization capability, is operator actuated.
- Raw water is used in the EFIS, and is not recirculated.
- The maximum authorized thermal power is 250 megawatts.
- The fission product inventory is much smaller than in commercial nuclear power plants.

7.1.2 Identification of Safety Criteria

The following section gives design bases for the PPS and other safety-related systems. Conservative considerations for instrument errors are included in the accident analyses presented in Chapter 15 (Accident Analyses).

The general design criteria discussed in Section 7.1.2.3 were considered in the design of the systems given in Identification of Safety-Related Systems (Section 7.1.1). In general, the scope of the design criteria documents is given in the document itself, and determines the systems or parts of systems to which the document is applicable.

7.1.2.1 Design Bases. ATR went critical and initially operated at full power in 1969. The design developed was consistent with the standard building practices, codes, and standards in place at that time. In 1983, the RSS was updated to Reactor Development Technology[a] (RDT) standards for that time. The ESFAS and the control room have been updated in recent years consistent with the codes and standards in place at those times. The applicable standards, codes, and practices are listed in the Design Basis Section for each system discussed.

7.1.2.1.1 Reactor Shutdown System—The RSS ensures that reactor safety limits are not exceeded during Condition 2 events (faults of moderate frequency: Anticipated) and that these events can be accommodated without developing into more severe conditions. Reactor trip setpoints are given in Chapter 16 (Derivation of Technical Safety Requirements).

The design requirements for the RSS are derived from analyses of plant operating and fault conditions where automatic rapid safety rod insertion is necessary to prevent or limit core or primary coolant boundary damage. Design basis requirements are addressed in Section 7.2.

7.1.2.1.2 Engineered Safety Features Actuation Subsystem—The ESFAS acts to limit the consequences of Condition 2 events (off-normal; Anticipated), Condition 3 events (Infrequent faults; Unlikely) and Condition 4 events (Limiting faults: Extremely unlikely).

---

[a]. U.S. Department of Energy Nuclear Energy (NE) Programs' Nuclear Standard is the current title for the RDT standards.

The design bases for the ESFAS are derived from the design bases given in Chapter 6 (Engineered Safety Features). Design basis requirements are addressed in Section 7.3. General design requirements are given below.

- Automatic Actuation Requirements:

  The primary requirements of the ESFAS, with the exception of the Vessel Vent System (VVS), are to receive input signals from the various ongoing processes within the reactor plant and to automatically provide, as output, timely and effective signals to actuate the various components and subsystems comprising the ESF. All systems are automatic with the exception of the VVS.

- Manual Actuation Requirements:

  For the VVS only, the control room and Room 121 have provisions for manually initiating the ESFAS. See Section 7.3 for additional information.

7.1.2.1.3 Normal Electrical Power—The normal electrical power for the ATR is provided by the ATR Power distribution System. This system is designed to provide continuous, reliable ac and dc power to the electrical equipment and instrumentation and controls systems at ATR. Details of this system are provided in Chapter 8 (Electrical Power).

7.1.2.1.4 Emergency Power—The ATR Power distribution System is designed to provide emergency power in the event of normal commercial or diesel power failures. This is accomplished with the Diesel-Commercial System, emergency diesels, and Battery-backed Power Systems. Design bases and a description of these are provided in Chapter 8 (Electric Power).

7.1.2.1.5 Interlocks—Interlocks are discussed in Sections 7.2, 7.3, 7.4, and 7.7.

7.1.2.1.6 Bypasses—Bypasses are discussed in Sections 7.2, 7.3, 7.4, 7.5, and 7.6.

7.1.2.1.7 Diversity—Diversity is provided, where practicable, for the protective systems to ensure adequate mitigation of identified accidents. Diversity will consist of using two or more protective subsystems, each of which monitors a different plant variable or uses a different type of equipment, or both, to provide for protection against a given incident.

Diversity is provided in the Reactor Shutdown System (RSS) as follows:

Diverse RSS subsystem	For this Primary RSS subsystem	For these accidents	Chapter 15 reference
Vessel Inlet Pressure (low)	Vessel Differential Pressure (low)	Decrease in reactor primary coolant flow rate	15.3.1.1
Vessel Outlet Pressure (high)	Vessel Inlet Pressure (high)	Increase in reactor coolant inventory	15.5.1.2
Vessel Outlet Pressure (low)	Vessel Inlet Pressure (low)	Decrease in reactor coolant inventory	15.6
Outlet Temperature	Inlet Temperature	Decrease in heat removal by the secondary	15.2.1.1
Emergency Coolant Pump Recirculation Flow	Emergency Coolant Flow Discharge	Low flow, open head operation	15.9.1.1
Neutron Level	Wide-Range Neutron	Ramp reactivity insertion	15.4.2.1
Quadrant Differential Temperature	Neutron Level or Wide Range Neutron	Lobe power balance shift	15.4.3.2
Wide Range Neutron	Neutron Level	Fast ramp reactivity insertion or step reactivity insertion	15.4.4, 15.4.5, 15.4.6

Diversity for the mitigation of over-pressurization of the primary coolant system is provided by the primary coolant system safety relief valves should the RSS Pressurizing Pumps and Gland Seal Pumps Shutoff System fail to mitigate the over pressure before pressure increases to the trip level of the relief valves (see Section 15.5.1.2).

7.1.2.1.8 Bistable Trip Setpoints—The setpoint for the RSS and the ESFAS is the limiting control setting. The setpoint is established in the accident analysis to preclude exceeding the safety limit. The limiting control setting accounts for the instrument error in the setpoint and the response time of the subsystem. The specific setpoints are shown in Chapter 16 (Derivation of Technical Safety Requirements).

7.1.2.1.9 Fire Protection—Mitigation of consequences of a local fire is provided by electrical isolation of redundant channels, by the physical separation in separate rooms of redundant sets of equipment, and by enclosing the equipment in cabinets that are physically separated by metallic walls or metallic walls and distance. Additionally, a local automatic Halon fire protection system is provided for the RSS equipment rooms, and water sprinkler systems are available for other equipment.

7.1.2.2 Physical Identification of Safety-Related Equipment. ATR has a program in place for labeling equipment and wiring. The program is described in the *Operations* manual.

7.1.2.3 General Design Criteria. The following list is the set of ATR General Design Criteria (GDC) that applies to the instrumentation and control systems. Chapter 3 (Design of Structures, Components, Equipment, and Structures) discusses the application of the GDC to the ATR.

- GDC 1, Quality Standards and Records
- GDC 2, Design Basis for Protection Against Natural Phenomena

- GDC 3, Fire Protection
- GDC 4, Environmental and Dynamic Effects Design Basis
- GDC 10, Reactor Design
- GDC 12, Suppression of Reactor Power Oscillations
- GDC 13, Instrumentation and Control
- GDC 15, Primary coolant System Design
- GDC 16, Confinement
- GDC 19, Control Room
- GDC 20, Protection System Functions
- GDC 21, Protection System Reliability and Testability
- GDC 22, Protection System Independence
- GDC 23, Protection System Failure Modes
- GDC 24, Separation of Protection and Control System
- GDC 25, Protection System Requirements for Reactivity Control Malfunctions
- GDC 26, Reactivity Control Systems Redundancy and Capability
- GDC 27, Combined Reactivity Control System Capability
- GDC 29, Protection Against Anticipated Operational Occurrences
- GDC 33, Primary coolant Makeup
- GDC 35, Emergency Core Cooling
- GDC 37, Testing of Emergency Core Cooling System
- GDC 50, Confinement Design Basis.

7.2 Reactor Shutdown System

7.2.1 Description

7.2.1.1 System Description. The Advanced Test Reactor (ATR) Reactor Shutdown System (RSS) is designed and maintained to shut down the ATR before design basis limits are exceeded. Design limits are set by equipment limitations such as mechanical, hydraulic, temperature, and heat transfer. Therefore, the RSS monitors variables that are directly related to equipment limitations such as pressure, flow rates, temperatures, and neutron flux. Whenever a variable monitored by the RSS reaches a limiting control setting, the ATR will be shut down to prevent damage to the fuel, the reactor structure, or primary system, or to prevent the release of fission products into the environment.

The sources of ATR reactor trip signals are:

- Process variables
- Seismic
- Experiment loops (non-PPS)
- Manual scram circuits.

Figure 7.2-1 shows a block diagram of the overall ATR RSS. Figures 7.2-2 through 7.2-16 show the more detailed subsystems within the RSS. Cross hatching on figures indicates the boundary between safety-related and nonsafety-related equipment or components.

The signal path starting from the sensors (as shown in Figure 7.2-1), which monitor the plant variables related to the limiting safety system setting, goes to an analog comparator or to a contact-to-logic-level-converter (CLLC) which converts the signal to a logic level compatible with the two-out-of-three logic modules. Each analog comparator and CLLC has four identical outputs. Each analog comparator and CLLC output is sent to a two-out-of-three logic module. If any two of the three inputs exceed the trip point, the comparator is tripped and the rod clutch controllers release the safety rods, causing the reactor to shut down. From the outputs of the two-out-of-three logic modules to the rod clutch coil controllers, the RSS is configured as a two-out-of-four system (INEEL 2000, Section 2.2).

7.2.1.1.1 Functional Performance Requirements—The RSS automatically initiates reactors trips:

- To prevent fuel damage for an operational transient
- To limit core damage for infrequent faults
- To protect the primary coolant pressure boundary
- To shut down the reactor and maintain it in a safe shutdown condition.

The RSS provides for manual initiation of reactor trip by operator action.

7.2.1.1.2 Reactor Trips—For a full discussion of the protective requirements for the reactor trips provided by the subsystems listed in Section 7.2.1.1.2.1 through 7.2.1.1.2.15 refer to Chapter 16 (Derivation of Technical Safety Requirements) of this UFSAR.

7.2.1.1.2.1 Vessel Differential Pressure—(See Figure 7.2-2.) A signal proportional to the difference between the reactor vessel primary coolant inlet and outlet pressure trips the reactor on either low or high differential pressure. The differential pressure across the reactor vessel is proportional to the flow rate through the reactor core. The purpose of the low differential pressure reactor trip is to prevent overheating the fuel elements when the coolant flow rate through the reactor core falls below the design limit. The low differential pressure is a diverse subsystem for low inlet coolant pressure for low coolant flow rate events.

The primary purpose of the high differential pressure trip is to shut down predetermined primary coolant pumps (PCPs) before high flow rates through the reactor core cause damage to the reactor internals. Two reactor primary coolant pumps are shut down for three-pump operation and, depending on the pump selection for two-pump operation, either zero, one, or two pumps will be shut down when the vessel differential pressure reaches the high differential pressure limit. Two primary coolant pumps would shutdown if a third pump was started during two PCP operation and the ESF setpoint was reached. Shutting down the primary pumps can cause the coolant flow rate through the reactor core to fall below the low design limit, and the reactor is tripped as a precaution whenever the vessel differential pressure approaches the high design limit (EG&G Idaho 1994, Section 1.1.5).

The low vessel differential pressure signal is inhibited from tripping the reactor during depressurized plant operation (INEEL 2000, Section 2.3.2.1-1).

7.2.1.1.2.2 Vessel Inlet Pressure—(See Figure 7.2-3.) A signal proportional to the reactor vessel primary coolant inlet pressure trips the reactor on either low or high inlet pressure. Low pressure is a diverse subsystem for low vessel differential pressure (low flow). The purpose of the high inlet pressure reactor trip is to protect the Primary Coolant System (PCS) from over pressure. The primary method used for terminating high pressure transients is to trip the primary pressurizing pumps and the gland seal pumps in addition to the reactor shutdown. [See Chapter 15 (Accident Analyses) or the Design Basis Report Sections 2.1.5 and 2.2.5 (EG&G Idaho 1994). The low and high inlet pressure reactor trips are diverse to the low and high outlet pressure trips.]

The purpose of the low inlet pressure trip is to protect the fuel from critical heat flux (CHF) following a three (3) in. loss-of-coolant-accident (LOCA) resulting from a rupture outside the radiologic boundary. This is done by causing a reactor shutdown in addition to shutting off the primary coolant pumps after a predetermined time delay. Shutting off the primary coolant pumps prevents air from being drawn into the primary cooling system from the surge tank. Air in the PCS could cause a degradation of the emergency pump flow. This ESF functions in conjunction with the low outlet pressure subsystem and is described in greater detail in Section 7.3.5. Low pressure is a diverse subsystem for low flow.

The low inlet pressure signal is inhibited from causing a trip during depressurized plant operation (INEEL 2000, Sections 2.3.2.1-3).

7.2.1.1.2.3 Vessel Outlet Pressure—(See Figure 7.2-4.) A signal proportional to reactor vessel primary coolant outlet pressure trips the reactor on either low or high outlet pressure. The low and high outlet pressure reactor trips are diverse to the low and high inlet pressure reactor trips (EG&G Idaho 1994, Sections 2.1.5 and 2.2.5). In addition to causing a reactor trip, a low outlet pressure trip actuates the ESF function to shutoff the operating primary coolant pumps after a pre-set time delay. This ESF function in conjunction with the low inlet pressure subsystem ESF is described in greater detail in Section 7.3.5.

The low outlet pressure signal is inhibited from causing a trip during depressurized plant operation (INEEL 2000, Section 2.3.2.1-2).

7.2.1.1.2.4 Emergency Coolant Flow Discharge—(See Figure 7.2-5.) A signal proportional to the flow delivered to the reactor core by the emergency coolant pumps during depressurized plant operation trips the reactor on low flow. The primary purpose of the low emergency coolant flow reactor trip is to prevent overheating the fuel elements during depressurized plant operation.[a]

The low emergency coolant flow signal is inhibited from tripping the reactor during pressurized plant operation (INEEL 2000, Section 2.3.2.1-4).

7.2.1.1.2.5 Emergency Coolant Pump Recirculation Flow—(See Figure 7.2-16.) Two emergency coolant pumps provide emergency coolant flow for the removal of decay heat from the reactor core when all the PCPs fail. The primary purpose of the Emergency Coolant Pump Recirculation low flow trip is to prevent an unprotected loss of flow from the loss of the PCPs. During normal operation, one emergency coolant pump is continually running, and the other emergency coolant pump will automatically start and reach full speed within 10 seconds of the operating emergency coolant pump failing. Each emergency coolant pump has adequate capacity by itself for removing decay heat from the reactor core. During normal operation, the output of the running emergency coolant pump flows through a high resistance recirculation line, not through the reactor core. Upon loss of primary coolant pump head, a check valve will open to allow the emergency coolant pumps to run their output through the reactor core.

Failure of the emergency coolant pump automatically starts the back-up emergency coolant pump within 10 seconds. If the flow delivered by the backup emergency coolant pump does not exceed the low flow limit within 10 seconds of the running emergency coolant pump failing, a reactor trip signal will be generated. Failure of all primary coolant pumps automatically starts both emergency coolant pumps.

A block diagram of the emergency coolant pumps recirculation flow subsystem is shown in Figure 7.2-16. The special logic shown in the block diagram performs the following function when the reactor is in the pressurized mode:

> Transmits an emergency coolant pump recirculation flow reactor trip signal to the two-out-of-three logic when the recirculation flows from the emergency coolant pumps are less than their low recirculation flow setpoints, and the 10-second time delay relay has timed out.

When the reactor is in the depressurized mode, the special logic shown in Figure 7.2-16 transmits an emergency coolant pump recirculation flow reactor trip signal to the two-out-of-three logic when the recirculation flows from both the emergency coolant pumps are less than their low recirculation flow setpoints. The 10 second delay relay shown in the block diagram does not affect operation of the emergency coolant pump recirculation flow reactor trip signal when the reactor is in the depressurized mode[b] (INEEL 2000, Section 2.3.2.1-5; EG&G Idaho 1978; EG&G Idaho 1977a). The emergency coolant pump recirculation flow reactor trip is a diverse subsystem for low emergency coolant pump discharge flow during operation in the depressurized mode.

---

[a]. The term "emergency coolant flow" in this mode should be clarified because reactor operation is permitted with only one emergency coolant pump operating and no primary coolant pumps operating. In this case, an emergency coolant pump is supplying the cooling water required for depressurized reactor operation.

[b]. The 10-second time delay relay shown in Figure 7.2-16 starts to time out when the recirculation flow from either emergency coolant pump falls below its recirculation flow setpoint.

7.2.1.1.2.6 Quadrant Numbers 1, 2, 3, and 4 Differential Temperature—(See Figure 7.2-6.) A signal proportional to the difference between the temperature of the outlet and inlet cooling water to an ATR reactor quadrant is used to trip the reactor on high differential temperature. There are four quadrant high differential temperature reactor trip signals. The primary purpose of a quadrant high differential temperature reactor trip is to prevent the power in a reactor quadrant from exceeding design basis limits to protect fuel from CHF (INEEL 2000, Section 2.3.2.1-6). For lobe power balance shift events the quadrant differential temperature reactor trip is a diverse subsystem for a high neutron level reactor trip.

7.2.1.1.2.7 Inlet Temperature—(See Figure 7.2-7.) A signal proportional to the temperature of the primary coolant water at the inlet to the reactor core trips the reactor on high temperature. The primary purpose of this reactor trip is to prevent the coolant temperature from exceeding design temperature limits and to protect fuel from CHF (INEEL 2000, Section 2.3.2.1-7).

7.2.1.1.2.8 Outlet Temperature—(See Figure 7.2-8.) A signal proportional to the temperature of the primary coolant water at the outlet of the reactor core trips the reactor on high temperature. The primary purpose of this reactor trip is to prevent the coolant temperature from exceeding design temperature limits and protect fuel from CHF. This reactor trip is diverse to the high inlet temperature reactor trip (INEEL 2000, Section 2.3.2.1-8).

7.2.1.1.2.9 Vessel Level—(See Figure 7.2-9.) A signal proportional to the level of the cooling water in the reactor vessel trips the reactor on low water level. The purpose of this reactor trip is to protect the reactor fuel against a loss of coolant accident during depressurized operation (INEEL 2000, Section 2.3.2.1-10). An annunciator alerts the operator to low vessel inventory. This alarm is classified as an ESF and called the Vessel Level Alarm System. See Chapter 6.

7.2.1.1.2.10 Neutron Level—(See Figure 7.2-10.) A signal proportional to the thermal neutron flux level of the reactor trips the reactor on high thermal neutron flux level. The purpose of this reactor trip is to protect the fuel from CHF caused by either a step reactivity insertion or a slow-ramp reactivity insertion occurring near requested reactor power. Although this reactor trip is diverse to the wide-range neutron reactor trip and the high quadrant differential temperature trip, it is not fully independent of the wide-range neutron reactor trip and the high quadrant differential temperature trip. The channel neutron level detector (uncompensated ion chamber) and the channel wide-range neutron level detector (compensated ion chamber) are banded together and share the same instrument thimbles.

The neutron level reactor trip is operational in both the pressurized and depressurized plant operating modes. The channels incorporated an adjustable intermediate gain step with a minimum gain range of 1 to 2 nominal full-power. This intermediate gain step will be initiated following a power reduction to the range change setpoint while operating in the nominal full power range. The neutron level channels incorporate a 100 gain step (100 times nominal full-power gain) used for depressurized operation. This 100 gain change for depressurized operation is accomplished by the channel mode select switch when placed in the DEPRESSURIZED position. This subsystem continuously monitors the thermal neutron flux level of the core from approximately 0.01 to 150% full power (INEEL 2000, Section 2.3.2.1-11).

7.2.1.1.2.11 Fission Break—(See Figure 7.2-11.) A signal proportional to the gamma radiation level of the primary coolant water in the reactor outlet trips the reactor on high gamma radiation level. The purpose of this reactor trip is to shut the reactor down whenever damage to a fuel element causes a significant fission product release to the PCS (INEEL 2000, Section 2.3.2.1-9).

7.2.1.1.2.12 Wide-Range Neutron—(See Figure 7.2-12.) A signal proportional to the thermal neutron flux trips the reactor when the reactor period is less than a preset limit and the reactor has a high thermal neutron flux level. The purpose of this trip is to protect the fuel from CHF caused by a slow ramp reactivity insertion. Although this reactor trip is diverse to the neutron level reactor trip, it is not fully independent of the neutron level reactor trip. The channel wide-range neutron level detector (compensated ion chamber) and the channel neutron level detector (uncompensated ion chamber) are banded together and share the same instrument thimbles.

The wide-range neutron reactor trip is operational in both pressurized and depressurized plant operating modes. In the depressurized plant operating mode, the reactor mode switch scales the wide-range neutron amplifiers by a factor of 1/100. This limitation decreases the wide-range neutron's high-level reactor trip point to 1/100 of the equivalent pressurized plant operating mode trip value.

The wide-range neutron amplifiers detect a rate of change of reactor power that approaches the limiting control setting by limiting the maximum rate at which the automatic range changing wide-range neutron amplifiers can change from a lower to a higher full scale range (INEEL 2000, Section 2.3.2.1-12 and Table 1-18).

Table 3.1.1-1 of the TSR specifies a ± 0.3 second accuracy for the Wide Range Neutron Level Period (rate of change). This specific trip accuracy is based on the TSR trip setting of 1.15 N_F with the period timer of 0.95 N and a 250 millisecond time delay (Atkinson 1994). A 250 millisecond time delay on the timer before reranging provides a period trip of 1.3085 seconds. A 1.3085 second period minus an accuracy uncertainty in the period of no more than 0.3 seconds gives a worst case setpoint of 1.01 seconds. This 1.01 second period is an equivalent minimum steady period of the Wide Range Neutron Level period timer setting. The transient period may be less than 1 second at the end of the rerange delay time. The accuracy of the period trip and its accuracy uncertainty are an inverse function of the ratio of the trip point setting over the timer start point. Presently, the period trip is set at 1.7 seconds based on a timer start at 0.95N and a trip at 1.1N with a 250 millisecond time delay before rerange is allowed. The worst case setpoint is then 1.28 seconds (1.7-0.42 seconds) which is greater than 1 second, therefore, satisfying the accident analysis with a trip value that is more conservative than the worst cast setpoint setting specified in Table 3.1.1-1 of the TSR.

7.2.1.1.2.13 Seismic Level—(See Figure 7.2-13.) A signal proportional to the seismic activity in the ATR building trips the reactor on high seismic activity. The purpose of this reactor trip is to insert the safety rods into the core before the earthquake ground acceleration reaches the Safe Shutdown Earthquake (SSE) for ATR (INEEL 2000, Section 2.3.2.2-1 and Table 1-19).

7.2.1.1.2.14 Manual Scram—(See Figure 7.2-14.) A reactor operator can generate a manual scram reactor trip signal using manually operated switches in the reactor control room. The manual scram switches interface to the safety rods via the same type of logic modules that are used by process variables. The manual scram is diverse to all the automatic trips. The purpose of this reactor trip is to give the reactor operator the capability to shut the reactor down when the reactor operator judges any event or condition to be unsafe or adverse to continue reactor operation (INEEL 2000, Section 2.3.2.2-3 and Table 1-21). The manual scram is initiated in a normal mode of operation to shutdown the reactor.

7.2.1.1.2.15 Experimental Loops—(See Figure 7.2-15.) An ATR loop protection system monitors process variables in the ATR experiment loops. When a monitored variable exceeds a limiting programmatic system setting, the ATR loop protection system will send a trip signal to the ATR RSS to prevent damage to an experiment loop. Although an experiment loop can send a trip signal to the RSS (INEEL 2000, Section 2.2.2.15), the loop inpile tubes, loop piping, loop components, and loop instrumentation are classified as being nonsafety-related and are therefore not part of the RSS. [See Chapters 3 (Design of Structures, Components, Equipment, and Systems), and 10 (Experiment and Irradiation Facilities).]

7.2.1.1.3 RSS Instrumentation

7.2.1.1.3.1 Sensors and Transmitters—A sensor and transmitter, or a combination sensor/transmitter, measures a reactor process variable and emits an analog electrical output signal proportional to the variable being monitored (INEEL 2000, Section 2.3.1.1-1).

7.2.1.1.3.2 Analog Comparator—An analog comparator monitors an analog signal coming from a sensor and transmitter, or a combination sensor/transmitter. When a signal reaches or exceeds preset limits, the comparator sends a trip signal to the two-out-of-three logic modules (INEEL 2000, Section 2.3.1.1-2).

7.2.1.1.3.3 Contact-to-Logic-Level Converter—The Contact-to-Logic-Level Converter (CLLC) monitors contacts and converts a contact signal to a logic level compatible with the two-out-of-three logic modules (INEEL 2000, Section 2.3.1.1-2).

7.2.1.1.3.4 Two-Out-of-Three Logic Modules—The two-out-of-three logic modules consist of four identical modules for each subsystem that are physically and electrically separated from each other. (See RSS Block Diagram, Figure 7.2-1.) Each subsystem logic module interprets the input signals using a two-out-of-three combinational logic system to send an output trip. Either an analog comparator of an analog subsystem, or a CLLC, sends an input signal for each trip function to a two-out-of-three logic module associated with an instrument subsystem. Each of the trip functions has four sets of combinational logic. Each set of four subsystem two-out-of-three logic modules for each trip function provides an output to one of four associated division logic modules (INEEL 2000, Section 2.2.1.2-1).

7.2.1.1.3.5 Division Logic Modules—The division logic system consists of four identical modules that are physically and electrically separated. (See RSS Block Diagram, Figure 7.2-1.) Each division logic module receives inputs from the subsystem logic, two-out-of-three logic modules, to send a trip signal to two Rod Clutch Coil Controllers (RCCC). A division logic module undergoes a trip by receiving a trip signal from a related two-out-of-three logic module. Once the module is tripped, it stays in a latched state regardless of the input level until it is manually reset. The Surveillance and Test System (SATS) actively tests the seal-in feature of the division logic. A reset command from SATS resets the tested division logic module after the seal-in test, provided an input to the division logic module has not tripped during the test cycle (INEEL 2000, Section 2.4.2). (See Section 7.7 for additional information on SATS.)

7.2.1.1.3.6 Rod Clutch Coil Controllers (RCCC)—The RCCC logic module is a matrix of eight switching circuits arranged in a dual 1:2 × 2 configuration. (See Reactor Shutdown Block Diagram, Figure 7.2-1.) The circuits interrupt rod clutch coil current when any two of the four division logic modules are tripped. Each division logic module drives two controllers through isolated inputs. The switching function of the individual controllers is verified by the SATS. (See Section 7.7.4 for additional information.)

The two controllers driven by a division logic module are mounted in adjacent cabinets. Each pair of controllers is mounted on a wall of the electronic room, which contains the division logic (INEEL 2000, Section 2.4.3).

The rod clutch coils are powered from two independent dc power supplies through an auctioneer circuit. The auctioneer selects the higher of the two outputs for use. The independent dc power supplies are powered from separate ac buses through separate transformers: one supply is powered from the 480-volt commercial bus and the other is powered from the 480-volt diesel bus. The auctioneer is provided with over-and-under-voltage annunciators. Total loss of both of these power sources would result in a reactor scram due to loss of rod clutch coil power (INEEL 2000, Section 5.3.1.1.2).

7.2.1.1.3.7 Analog Buffer—Analog buffers isolate RSS signals, which are used by non-RSS equipment for indication, recording, and SATS input (INEEL 2000, Section 2.3.1.1-6).

7.2.1.1.3.8 Nuclear Instrumentation—The ATR routinely operates with substantial core flux tilts and requested full power (N_F), which are specific to an operating cycle. To accommodate the flux tilt, the neutron level and wide-range neutron trip channels use variable-gain amplifiers, which can be manually adjusted from the reactor control room by the reactor operator. The analog comparator's trip point is set to a fixed percentage of the full-scale output voltage of the variable gain amplifiers. The initial position of the chambers is critical in assuring that the nuclear instrumentation readings are maintained on scale. Chamber position can be manually adjusted to establish proper operating conditions for the nuclear instrumentation. Prior to and during operation the overall range adjust (ORA) settings for the nuclear instrumentation are made to ensure proper operation of the nuclear instrumentation trip functions. The ORA settings are administratively controlled in operating procedures. The reactor power level required to generate a trip signal for a specific neutron level channel is decreased by increasing the gain of the variable gain amplifier and increased by decreasing the gain of the variable gain amplifier (INEEL 2000, Section 1.2.8; EG&G Idaho 1977b; EG&G Idaho 1977c). (See Figure 7.2-10, Typical RSS Neutron Level Subsystem.)

7.2.1.1.3.8.1 Neutron Level Channel—The neutron level instrumentation continuously monitors the reactor core's thermal neutron flux level from approximately 1×10^{-4} N_F to 1.5×10^{-2} N_F in the depressurized plant operating mode, and from approximately 0.005 N_F to 1.5 N_F in the plant pressurized operating mode, where 1.0 N_F is equal to the maximum power for which the reactor is qualified to operate for a given cycle (EG&G Idaho 1977c). The neutron level channels incorporated an adjustable intermediate gain step with a minimum gain range of 1 to 2 nominal full power. This intermediate gain step will be initiated following a power reduction to the range change setpoint while operating in the nominal full-power range.

7.2.1.1.3.8.2 Fission Break Channel—The fission break channels provide a linear signal proportional to primary coolant background radiation. Five selectable signal ranges with square-root-of 10 ranging are provided to cover a total range of 2-1/2 decades. A startup range amplifier provides an additional gain of 3 for increased amplification during reactor startup and other operations at low power levels. Provision is made for an intermediate setpoint at approximately one-third the nominal full power radiation level.

7.2.1.1.3.8.3 Wide-Range Neutron Channel—The wide-range neutron instrumentation continuously monitors the reactor core's thermal-neutron flux level and rate of change over a six-decade range, approximately 1×10^{-6} N_F to 1.5 N_F.

The wide-range instrumentation uses an amplifier with 12 linear gain ranges and automatic range switching to cover a six-decade range during startup and shutdown. The full-scale ranges of the wide-range neutron instrumentation for pressurized operation are:

Range Number	Range (Fraction of N_F)
1	0 to 0.47×10^{-5}
2	0 to 1.50×10^{-5}
3	0 to 0.47×10^{-4}
4	0 to 1.50×10^{-4}
5	0 to 0.47×10^{-3}
6	0 to 1.50×10^{-3}
7	0 to 0.47×10^{-2}
8	0 to 1.50×10^{-2}
9	0 to 0.47×10^{-1}
10	0 to 1.50×10^{-1}
11	0 to 0.47
12	0 to 1.50

The following inhibitors are used to prevent a wide-range neutron amplifier from automatically switching to a higher full-scale range when the reactor power level is increasing.

- A preset time-delay circuit has not timed out. The time delay provides period protection.
- The output of a wide-range neutron amplifier is less than a preset level.
- The reactor mode switch is in the depressurized plant operating mode position, and the wide-range neutron amplifier is on Range 8.
- The wide-range neutron amplifier is on Range 12.
- A reactor trip has occurred for a wide-range channel.

A wide-range neutron amplifier automatically switches to a lower full-scale range whenever its output falls below a preset limit.

Each wide-range neutron amplifier has mounted in the reactor control room a variable gain control for adjusting the gain of the amplifier plus or minus 20% to accommodate flux tilts (INEEL 2000, Section 2.3.2.1-12; EG&G Idaho 1977b).

7.2.1.1.4 Pressurized and Depressurized Operation—The ATR RSS provides the means to operate the reactor safely in either the depressurized (flux run) mode, or in the pressurized mode. Operation in these modes is controlled by the three manually operated, keyed reactor mode switches located in PPS Rooms A, B, and C. These switches are a three-position switch with the positions being SHUTDOWN, DEPRESSURIZED, and PRESSURIZED. The SHUTDOWN position provides for maximum shutdown testing, the DEPRESSURIZED position inhibits or modifies operation of selected subsystems during depressurized operation, and the PRESSURIZED position inhibits or modifies operation of selected subsystems during pressurized operation. Selection of the depressurized and shutdown operating mode automatically activates an annunciator.

7.2.1.1.5 RSS Interlocks and Blocks—In pressurized operation, the following functions occur:

- Low emergency coolant flow discharge reactor trip is inhibited.
- After the occurrence of an emergency coolant pump recirculation flow reactor trip signal, the trip signal is first inhibited for 10 seconds, and then is either blocked if the backup emergency coolant pump has come up to operating speed, or is allowed to trip the reactor if both emergency coolant pumps are shut down.

In the depressurized mode, the following changes are made to the RSS:

- The gain of the neutron level amplifiers is increased by a factor of 100 over that in the pressurized mode.
- The wide-range neutron amplifiers are inhibited from up-ranging to Ranges 9, 10, 11, and 12. See Section 7.2.1.1.3.8.3 for a definition of the ranges.
- The following reactor trip functions are blocked:
  - Low vessel differential pressure
  - Low vessel outlet pressure
  - Low vessel inlet pressure.
- After the occurrence of an emergency coolant pump recirculation flow reactor trip signal, the trip signal is not inhibited for the 10 seconds.

7.2.1.1.6 Power Escalation Permissive—The Wide Range Neutron Instrumentation System (see Section 7.2.1.1.3.8.3) provides period as well as neutron-level protection. Continuation of startup or power increases requires the reactor period to be greater than a preset value.

7.2.1.1.7 System Configuration and Essential Features—The ATR RSS instrument subsystems, logic modules, actuator controllers, and surveillance readout instrumentation are comprised of modules, drawers, and other equipment that are housed in appropriate racks, cabinets, and panels. The equipment is interconnected with wiring and cabling in cable trays and conduit that is routed throughout the ATR plant with separation and isolation in accordance with the Class 1E criteria stated in Section 6.1, Specific Separation Criteria, Cables and Raceways, of Institute of Electrical and Electronics Engineers (IEEE) Standard 384-1981.

The ATR RSS instrument subsystems, logic modules, and surveillance readout instrumentation are powered from the ATR Battery-backed PPS Power System and the Battery-backed Power Instrument and Utility Systems. (See Chapter 8 [Electric Power] for additional information.)

The auxiliary structures and systems (equipment rooms, heating and ventilation, fire protection, lighting, etc.) house and service the RSS equipment.

7.2.1.1.8 Seismic Operating Conditions—The RSS, including all subsystems and components, is designed and constructed to remain operational and meet all functional requirements as defined in the equipment design specifications during and after an earthquake with an intensity no greater than the safe shutdown earthquake (SSE) (INEEL 2000, Section 2.2.5).

7.2.1.1.9 Coolant Temperature Sensor Arrangement—The PCPs discharge into a common 36-in. supply line that splits into two 24-in. reactor vessel inlet lines entering near the bottom of the reactor vessel. The coolant flows upward outside of the core reflector tank. Above the reactor core, flow reverses to a downward direction, through the core area into the flow-distribution tank. The distribution tank is divided into quadrants with an outlet line from each quadrant. The four outlets rise to above the core, exit from the vessel, and terminate into one 36-in. return line to the heat exchangers and back to the primary pumps.

Each of the four Quadrant Differential Temperatures is measured from thermowells placed in one of the 24-in. inlet pipes to a thermowell placed in each one of four outlet pipes.

The Inlet Temperature is measured in a thermowell placed in the 36-in. inlet pipe before it splits into two 24-in. pipes.

The Outlet Temperature is measured in a thermowell that is placed in the 36-in. outlet pipe after the four outlet pipes come together (Phillips Petroleum 1965).

7.2.1.1.10 Reactor Vessel Water Level—The design of the reactor vessel water level instrumentation employs the usual tank level arrangement using differential pressure between an upper and a lower tap on a column of water.

7.2.1.1.11 Power Supply and Environmental Variations—The power systems that provide the power for the RSS are described in Chapter 8 Sections 8.1.5 and 8.1.6. The environmental conditions under which the RSS must perform its function are listed in Table 7.2-2.

7.2.1.2 Setpoints—The setpoints that require reactor trip are given in Technical Safety Requirements.

7.2.1.3 Design-Basis Information

7.2.1.3.1 Applicable Codes and Standards—The RSS complies with the applicable portions of the following U.S. Department of Energy Nuclear Energy (NE) Programs, formerly RDT standards with exceptions stated in the following section. The version of each standard most current as of January 1, 1975, was used for the instrumentation.

NE (RDT) Standards:	
C 1-1T	Instrumentation and Control Equipment Grounding and Shielding Practices, January 1973
C 7-17T	Platinum Resistance Thermometer, April 1975
C 7-18T	Thermowell Systems for Liquid Metal Service, August 1972
C 14-1T[a]	Ventilation Exhaust Radiation Monitoring System, April 1974
C 14-2T[b]	Area Radiation Monitoring System, April 1974
C 15-8T	Direct Current Power Range Neutron Flux Monitoring System, July 1971
C 16-1T	Supplementary Criteria and Requirements for RDT Reactor Plant Protective Systems, December 1969
C 16-2T	Protection System Logic, April 1972
C 16-3T	PPS Buffers, October 1971
C 16-4T	Protection System Comparator, April 1972
C 17-1T	High Temperature Electrical Connectors and Hermetic Seals, March 1970
C 17-4T	General Instrumentation, May 1973
F 2-2T	Quality Assurance Program Requirements, August 1973
F 2-4T	Quality Verification Program Requirements, December 1974
F 2-9T	Reliability Assurance, June 1974
F 3-2T	Calibration Program Requirements, February 1973
F 4-20T	Operational and Maintenance Manuals, October 1971
F 7-2T	Packaging, Packing, and Marking of Components for Shipping and Storage, September 1975
F 7-3T	Marking of Components and Parts, June 1975.
Other Codes and Standards:	
U.S. Nuclear Regulatory Commission (NRC) Regulatory Guides (To the extent they augment the requirements of System Design Description (SDD)-7.7.2 and applicable NE standards).	
The Contractor's Standards (Installation only)	
ANC-STD-7017	Electrical and Electronic Fabrication
American National standards Institute (ANSI)/National Fire Protection Association (NFPA)	
ANSI/NFPA 70-1981 National Electrical Code	

a. Under the direction of DOE-ID any reference to this standard can be eliminated. The standard is just listed to note that it was used in the procurement of the RSS.

b. U.S. Department of Energy Nuclear Energy (NE) Programs, formerly RDT standards.

7.2.1.3.2 Exceptions to Standards—(INEEL 2000, Appendix A)

In the design of the RSS by Kaman Science, Inc., the following exceptions to the NE (RDT) Standards requirements were identified by Kaman Science, Inc. and granted by the contractor.

RDT C 1-1T Instrumentation and Control Equipment Grounding and Shielding Practices
Paragraph 3.3.2.2
The requirement to run all PPS cables in conduit is probably excessive. Enclosed metal cable trays may also be an acceptable alternative depending upon the specific application. In low-noise areas with adequate physical separation, open metal cable trays may be completely adequate.
Paragraph 3.4.7
The requirement to run all PPS neutron monitoring cables in conduit has been changed. Conduit is required from the neutron sensors to the signal conditioning equipment. Cable trays may be used in other parts of the neutron subsystem.
RDT C 7-18T Thermowell Systems for Liquid Metal Service
Not applicable to ATR.
RDT C 14-1T Ventilation Exhaust Radiation Monitoring System
Paragraph 3.2.4
The 20-year design life was reduced to 10 years to conform with the ATR PPS.
RDT C 14-1T Ventilation Exhaust Radiation Monitoring System
Paragraph 3.2.6
The 54- to 66-Hz range of line frequency seems excessive. A 57- to 63-Hz range is used.
RDT C 14-2T Area Radiation Monitoring System
Paragraph 3.2.5
The 20-year design life was reduced to 10 years to conform with the ATR PPS.
Paragraph 3.7.5
The 54- to 66-Hz range of line frequency seems excessive. A 57- to 63-Hz range is used.
RDT C 15-8T Direct Current Power Range Neutron Flux Monitoring System
This standard should be used as a guide and basis for the procurement specification, but its use is not a requirement.
RDT C 16-1T Supplementary Criteria and Requirements for RDT Reactor Plant Protective Systems
Paragraph 2.32
The phrase enclosed in commas, "to a channel sensor," is very unclear. The ATR SDD-7.7.2 (INEEL 2000) states in Paragraph 1.2.9.1 that the test signal should be inserted as close as practical during reactor operation for most subsystems. Therefore, it is felt that this paragraph does not include the channel sensor in the measurement of protective channel response time. Manipulation of the measured variable for test purposes is not considered practical during reactor operations for most ATR subsystems.

Paragraph 4.2.4
The requirement that diverse protective subsystems, to the extent practical, use both functional and equipment diversity is in conflict with the diversity requirements listed in ATR PPS SDD-7.7.2 (INEEL 2000), Paragraph 1.2.3.2. Equipment diversity within a subsystem that has no diverse subsystem backup is not practical, particularly with three channels arranged in two-out-of-three coincidence. Similarly, equipment diversity in the logic portions of a protective subsystem is not considered practical.
Paragraph 4.3.2.c
Isolation adequacy based upon a "means to enable detection of failures in buffer circuits" is not practical. This implies a requirement to requalify the buffer circuit periodically in situ. Other PPS devices are not normally subject to an in situ requalification of all their essential performance requirements; therefore, this requirement for isolation devices is probably excessive.
Paragraph 4.4
Reference to MIL-N-52334 should be deleted.
Paragraph 4.5.7.a
The "means" provided to limit the number of concurrent instrument channel bypasses shall be through administrative control.
Paragraph 4.5.9
PPS status indicators cannot provide complete information pertinent to plant conditions requiring protective action; however, they do provide information for those variables monitored by the PPS.
Paragraph 4.5.9.c
Where status-indication devices are provided with the ATR PPS actuators, these indication devices will not be classified as PPS input since they do not fulfill the monitoring and initiation of protective trips required of PPS inputs to protective subsystems.
Paragraph 4.6.2.1.b
On-line testing will not involve perturbation of the monitored reactor variable so as to be consistent with the ATR PPS SDD Paragraph 1.2.9.1.
Paragraph 4.6.2.1.f
The injected analog test signal will simulate the magnitude of the measured variable, but may not simulate its transient, or rate of change, characteristics.
Paragraph 4.6.3.1.b
When two channels of a subsystem contain detected unsafe failures, the proposed initiation will be through a procedural manual reactor trip. In this case, the controlled action will be as rapid as the automatic reactor trip. An automatic means of initiating reactor trip upon detection of these two unsafe failures is not intended.
RDT C 16-2T Protection System Logic
Paragraph 3.2.1.1
The final sentence, "each logic train shall output a separate logic trip signal to a final trip device" is not applicable to the ATR PPS due to the chosen dual one-out-of-two-twice actuator train logic for reactor trip.
Paragraph 3.2.8.1
The meaning of the word "ground" is interpreted to be earth ground rather than circuit ground.
Paragraph 3.2.10.4
The need for relay devices to drive external annunciators is unclear. Suitably isolated solid-state interfaces to the annunciator are recommended to reduce electrical noise generated within the logic cabinet and to provide higher reliability for annunciator signals.

Paragraph 3.3.1
The need for two redundant auctioneered dc power supplies within each logic train is unclear. The ATR PPS logic trains may be supplied from independent battery sources whose reliability has been taken into account in the overall system availability calculations. Primary ac power sources are needed only for the dc battery chargers, and are not needed for ac to dc logic train power supplies.
Paragraph 3.3.2
The logic train auxiliary voltage source for the specified loads has not yet been determined; however, additional power supplies are not expected to be required. (Additional power supplies were not required.)
Paragraph 3.4.1
Logic train power supplies may be better located at the bottom of the cabinet for improved seismic tolerance rather than at the top for improved temperature-rise tolerance. Adequate temperature-rise protection will be provided to the logic train components if the bottom location is chosen. (Power supplies were located in top.)
Paragraph 3.5.1
Exception is taken to military specifications for individual component parts. Exception is taken to MIL-N-52334 (MO).
Paragraph 3.9
Exception is taken to the maximum drawing size of 34 × 44 in.
Paragraph 3.11
The spare parts list recommendation is kept current up to the time of formal turnover of the installed PPS equipment.
Paragraph 4.1
The basis for requiring that test equipment be qualified in accordance with IEEE 323 is unclear. Portable test equipment, which is used with the PPS intermittently, will not be qualified beyond commercial requirements. Permanently installed test equipment within the PPS cabinets will be designed to appropriate industry standards taking into consideration the sequences of its failure of the PPS itself; however, qualification to IEEE 323 is not expected to be a requirement.
Paragraph 4.3.5
Exception is taken to Military Specification MIL-N-52334 (MO).
RDT C 16-4T Protection System Comparator
Paragraph 2.2
Exception is taken to Military Specification MIL-N-52334 (MO).
Paragraph 3.2.1.2.6
Automatic removal of a comparator operating bypass or automatic prevention of a manual comparator operating bypass is probably not fully feasible. The use of administrative control is recommended to preclude the necessity of complex automatic permissive or inhibit functions for each comparator. If bypasses are provided, however, they must meet all requirements of this paragraph.
Paragraph 3.2.1.3.B and 3.2.10.6
The need for a relay device to place the logic output in a tripped state is unclear. Solid-state components may be best for improved noise immunity and improved reliability and should be permitted.
Paragraph 3.2.10.8
The need for a relay device for comparator trip alarm outputs is unclear. Solid-state components are recommended as the best for this application and should be permitted.

Paragraph 3.3.1
The comparator power source may be from independent dc batteries rather than from an ac to dc power supply.
Paragraph 3.5.1
Exception is taken to military specifications for component parts. Exception is taken to MIL-N-52334 (MO).
Paragraph 3.9
Exception is taken to the maximum drawing size of 34 × 44 in.
Paragraph 4.3.5
Exception is taken to MIL-N-52334 (MO).
RDT C 17-1T High Temperature Electrical Connectors and Hermetic Seals
Not applicable to ATR.
RDT C 17-4T General Instrumentation
Paragraph 3.6.6
Battery power sources may be used for the ATR PPS.

7.2.1.3.3 Minimum Performance Requirements

Protection System Ranges:
Range selection for the instrumentation covers the expected range of the variables during power operation.
RSS Response Time:
The maximum allowable response times are discussed in Chapter 15 (Accident Analyses).
Reactor Trip Point Accuracy:
Maximum allowable trip point errors are tabulated in Table 7.2-1.
Environmental:
Environmental data are in Table 7.2-2.

7.2.1.3.3.1 Trip Variables and Corresponding Protective Actions—Section 7.2.1.1.2 (Reactor Trips).

7.2.1.3.3.2 Plant Variables—

- Monitored variable; see Section 7.2.1.1.2.
- Analytical limits; see Chapter 15 (Accident Analyses).

7.2.1.3.3.3 Credible Single Events—The malfunctions, accidents, or other unusual events that have the potential to physically damage the RSS or cause environmental changes are:

- Earthquakes
- Fire
- Explosion - hydrogen buildup within the confinement area
- Missiles

- Flood
- Wind and Tornadoes.

Evaluation of these events was performed in the Level 1 External Events Probabilistic Risk Assessment (PRA). This study shows that any external events that may damage multiple RSS channels will result in a reactor scram. Therefore, the ATR RSS will perform satisfactorily under these conditions (Eide, Khericha, and Thatcher 1991).

7.2.1.3.3.4 Operating Bypasses—The ATR RSS reactor mode selector switches are operating bypasses. Selected safety function capabilities are inhibited for the DEPRESSURIZED and PRESSURIZED mode position. Refer to Section 7.2.1.1.4.

7.2.1.3.3.5 Tables—The RSS instrument channel subsystem overall accuracy is stated in Table 7.2-1. The RSS environmental specifications are stated in Table 7.2-2.

7.2.1.3.3.6 Block Diagrams—Block diagrams of the RSS systems are shown in Figures 7.2-1 through 7.2-16.

7.2.2 Analysis

7.2.2.1 Single Random Internal Failure Mode and Effects Analysis. A qualitative analysis has been made of the consequences of postulated single random failures within the system. This analysis uses a Failure Mode and Effects Analysis (FMEA) presentation to examine the consequences of the primary failure modes of each module taken one at a time. Each postulated failure has then been ranked according to six consequence classifications, ranging from a very serious failure to an inconsequential one. This analysis demonstrates that the PPS will continue to accomplish its required protective functions given that a single random failure exists within the system (INEEL 2000, Appendix B).

7.2.2.2 Probabilistic Risk Assessment. A PRA has been completed for the ATR (Eide, Khericha, and Thatcher 1991). The results of the assessment of system failure probabilities that pertain to the RSS are listed below.

	Probability
Failure of ESF pressurizing pump trip	1.2E-3
Failure of emergency coolant flow given ac recovery	7.8E-4
Failure to insert at least 3 safety rods into the core	6.5E-7
Failure to shut down reactor on loss of commercial power	1.8E-5
Failure to shut down reactor on loss of diesel power	1.8E-5
Failure to shut down reactor on high quadrant differential temperature	1.8E-5
Failure to shut down reactor on fast ramp from high range	1.8E-5
Failure to shut down reactor on high PCS pressure	1.8E-5
Failure to shut down reactor on loss of heat sink	1.8E-5
Failure to shut down reactor on low flow	1.8E-5
Failure to shut down reactor on low range loop ramp	1.8E-5
Failure to shut down reactor on low PCS pressure	1.8E-5
Failure to shut down reactor by manual scram	2.8E-3
Failure to shut down reactor on slow ramp	2.2E-5

7.2.2.3 Single-Failure Analysis for the PPS Response to Postulated Single Credible Events. As part of the reliability assessment of the ATR PPS, a qualitative analysis has been made of the consequences of postulated single failures resulting from credible single events within the plant. This analysis uses a FMEA presentation to examine the consequences of each postulated credible single event one at a time. Each postulated credible single event has then been ranked according to six consequence classifications, ranging from a very serious failure to an inconsequential one.

Two sets of results are obtained for each postulated credible single event. The first result is the most likely outcome, and is generally a spurious reactor trip because of the fail-safe design of the PPS. The second result is the worst-case outcome given that all direct and consequential failures occur in the worst possible manner. These two outcomes serve to bound the lower and upper consequence limits for each postulated credible single event, and permit them to be ranked according to their predicted severity (INEEL 2000, Appendix B)[a].

7.2.2.4 General Functional Requirements. The ATR RSS maintains ATR plant parameters within limits for the design-basis events and for the environmental conditions listed in Table 7.2-2. The design-basis events analyzed and listed in Chapter 15 (Accident Analyses) are the limiting or enveloping events for the RSS. The RSS has a manual scram to insert the safety rods.

[a] The FMEA was performed on the proposed design, not in the as-built construction. The as-built design has been reviewed with regard to the fire events with the results reported in Thatcher 2000 and Thatcher 2001.

7.2.2.5 Classification of PPS Equipment. The PPS includes only the equipment necessary for implementing the protective functions determined by NE Standard C 16-1 T, Paragraphs 3.2 and 3.4. The other equipment is not part of the PPS. PPS equipment is used to automatically initiate protective action (e.g., release safety rods, trip primary coolant pumps, or trip pressurizing-pumps and gland-seal-pumps).

7.2.2.6 Defense Against Failure. The RSS is designed to concurrently achieve high system reliability, high system availability, and a low probability of spurious reactor trip. The analog and switch contact subsystems each have three redundant channels including separate power supplies. The two-out-of-three logic subsystems, the division logic subsystem, and the rod clutch coil controllers each have four redundant channels. See Figure 7.2-1. The redundant channels are electrically isolated and physically separated.

In the analog and switch contact subsystems, a single failure will not cause a loss of the protective function. In the two-out-of-three logic, and the division logic subsystems, double failures will not cause a loss of the protective function, and double-safe failures will initiate a spurious reactor trip. In the rod clutch coil controller actuator logic, double failures will not cause a loss of the protective function, and many combinations of double failures will not produce a spurious reactor trip (INEEL 2000, Section 2.2.3).

Whenever practical, equipment and components that exhibit a fail-safe characteristic have been selected for use.

The RSS meets the intent of ATR General Design Criteria (GDC) Nos. 21 and 22. Diversity is provided for the RSS as described in Section 7.1.2.1.7.

The RSS complies with NE Standard C 16-1T, Section 4.2, except as noted in Section 7.2.1.3.2 above.

7.2.2.7 Quality of Components and Modules. See Chapter 17 (Quality Assurance) for information on the quality of the equipment, components, and modules used in the RSS. The quality-assurance requirements applied to the RSS conform to the intent of ATR GDC 1.

7.2.2.8 Equipment Qualification. Qualification of the RSS was addressed by the ATR Equipment Qualification Program. Because the RSS is designed with redundancy (that is, components performing similar functions located in physically separate areas), reactor scram is assumed to have been completed before the RSS or safety-rod components experienced accident environments.

7.2.2.9 Channel Independence. The redundant channels and divisions of the RSS are designed to be independent. Failures in a channel or a division caused by unsafe environmental conditions, electrical transients, external malfunctions, internal failures, and maintenance operations will not propagate to other channels or divisions.

Physical independence is accomplished by mounting redundant sensors in separate cabinets; by installing the wiring for redundant sensors in separate wireways, cable trays, and conduit runs; by locating redundant channels in separate rooms; and by locating redundant divisions in separate rooms. Power-supply independence is accomplished by using separate power supplies for both redundant channels and redundant divisions. External-malfunction independence is obtained by physical separation and electrical isolation.

Functional independence for the RSS is provided by diversity as described in Section 7.1.2.1.7.

Electrical isolation is provided between safety-related and nonsafety-related equipment. Electrical isolation is provided between both redundant channels and redundant divisions (INEEL 2000, Section 2.2.3.4).

7.2.2.10 Control and Protection System Interaction. The protection system is designed to be independent and isolated from other systems. Isolation amplifiers are used to buffer RSS signals used by the annunciator system, the Reactor Data Acquisition System (RDAS), and the Surveillance and Test System (SATS). The isolation amplifiers are also used for system monitoring. They are classified as part of the protection system and are located in the analog protection racks. The isolation amplifiers are designed to ensure that the protective side of the circuit will not be affected by a short circuit, open circuit, or the application of credible fault voltages from within the cabinets on the isolated nonprotective side of the circuit. The signals obtained through the isolation amplifiers are never returned to the protection racks (EG&G Idaho 1990). This design meets the intent of ATR GDC 24.

7.2.2.11 Capability for Test and Calibration. The testing and surveillance of the RSS meet the applicable requirements of NE Standard C 16-1T. The SATS is used to periodically check the RSS during reactor operation. These checks confirm system operability, monitor setpoint values, and verify system calibration by interchannel comparison. If SATS is inoperable, the functions of SATS must be performed manually.

7.2.2.12 Multiple Setpoints. ATR Technical Safety Requirements Section 3/4.1, Table 3.1.1 specifies the setpoints for the parameters affected by different operating conditions (reactor startup, depressurized, two-pump and three-pump operation).

7.2.2.13 Completion of Protective Action Once Initiated. After initiation, the reactor trip protective function carries through to completion. The RSS must be manually reset to the non-trip state following a reactor trip.

7.2.2.14 Manual Initiation. Switches are provided in the reactor control room for manual initiation of the protective action. A failure in the automatic protective system does not prevent manual actuation of the protective function. Manual actuation relies on a minimum of equipment.

7.2.2.15 Access to Setpoint Adjustments. Access to all setpoint adjustments, module calibration adjustments, and test points is administratively controlled.

7.2.2.16 Indication of Protective Actions. Four annunciator windows in the reactor control room are used for indicating when protective actions occur and for identifying which channels caused the protective action. The annunciator windows are labeled "Channel A," "Channel B," "Channel C," and "Channel D." A Channel A, B, C, or D annunciator window will alarm whenever the monitored analog or switch contact channel, or logic division, is in the trip state. The simultaneous occurrence of two or more channel alarms indicates a protective action. Each process or switch contact variable monitored by the RSS also has an annunciator window in the reactor control room. These annunciator windows indicate which process or switch contact variable instrumentation was the source of the trip.

7.2.2.17 Identification. ATR has a program in place for labeling equipment and wiring in the *Operations* manual.

Table 7.2-1. RSS performance requirements for full-scale range and allowable trip-point error.[a]

Subsystem	Full-scale	Maximum allowable trip-point error	
		Error[b]	Percent full-scale (± %)
Vessel diff. pressure	0–200 psid	6.3 psid	3.15
Outlet pressure	0–400 psig	11.9 psig	2.97
Inlet pressure	0–500 psig	18 psig	3.60
Emergency flow	0–7,000 gpm	231 gpm	3.30[c]
Emergency pump recirculation	0–300 gpm	7.0 gpm	2.3[c]
Quadrant ΔT (1,2,3,4)	0–75 F°	2 F°	2.7
Inlet temperature	50–200°F	6°F	4.0
Outlet temperature	50–250°F	6°F	3.0
Vessel level	98–0 in.	5 in.	5.1
Seismic	0.005–0.05 g[d]	0.0005 g	N/A
Neutron level[e]	0–1.5 N_F	0.05 N_F	3.3
Wide range[e,f]	0–1.5 N_F	0.05 N_F	3.3
Fission break	0–50 R/h	± 5% of normal indication at N_F	N/A

a. INEEL 2000, Table 2-2.

b. The maximum allowable trip-point error values incorporate the overall system accuracy to ensure that the parameter trips within the limits specified in the safety analysis.

c. Does not include accuracy of orifice plate.

d. For Seismic, the accuracy is defined as the setpoint setting accuracy for the field calibrator.

e. NF is the reactor operating steady state power level (up to and including 250 MW). The neutron level and wide range subsystems are adjusted to indicate 100% at NF.

f. The Wide range also provides period protection. The Limiting Control Setting for the period protection is governed by Table 3.1.1-1 of the TSR for the ATR. Since the maximum allowable trip point error is setpoint dependent specific accuracy values are not placed in this table. See Section 7.2.1.1.2.12.

Table 7.2-2. RSS environmental specifications.[a]

System/areas	Temperature	Humidity	Pressure	Radiation	Vibration
Normal					
Reactor Primary System[b]	125° to 170°F	c	0–370 psig	0–50 R/hr	0–0.25 g and 0-10 mil
Inaccessible areas[f]	75° to 105°F	0–90	Atmo. at 5,000 ft	0–50 R/hr	0–0.05 g and 0-0.1 mil
Accessible areas[f]	70° to 105°F	0–90	Atmo. at 5,000 ft	0–10 mR/hr	0–0.05 g and 0-0.1 mil
Nuclear instrument thimbles	80° to 250°F	0–99	Atmo. at 5,000 ft	10^2 to 4.5×10^9 nv and 0 to 3.5×10^6 R/hr	0–0.05 g and 0-0.1 mil
Abnormal[d]					
Reactor Primary System	40° to 300°F	c	0–1,000 psig	0–1,000 R/hr	e
Inaccessible areas[f]	40° to 140°F	0–100[g]	10–15 psig	0–500 R/hr	e
Accessible areas[f]	40° to 125°F	0–95	10–15 psig	0–20 mR/hr	e
Nuclear instrument thimbles	40° to 400°F	1–100[g]	0–100 psig	0 to 4.5×10^{10} nv and 0 to 2×10^7 R/hr	e

a. INEEL 2000.

b. Vibration values applicable to primary piping structures.

c. Water-filled system

d. For abnormal pressure and temperature conditions, the equipment shall be capable of operating in the abnormal range for one hour (INEEL 2000, Section 1.2.2.)

e. No abnormal vibration conditions that would cause values in excess of the normal ranges have been identified.

f. Inaccessible areas are those for which personnel access is prohibited during full-power reactor operation with the exception of the storage canal.

g. The 100% humidity is noncondensating.

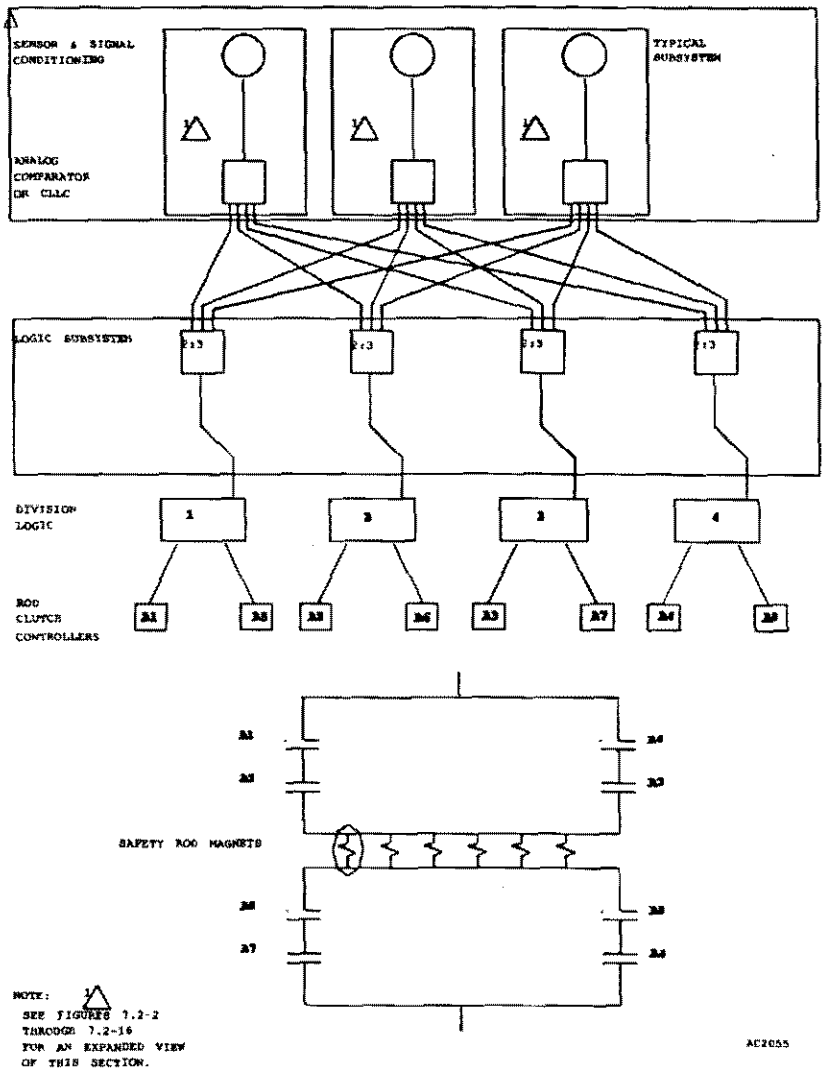

Figure 7.2-1. Reactor Shutdown System block diagram. **(For Information Only)**

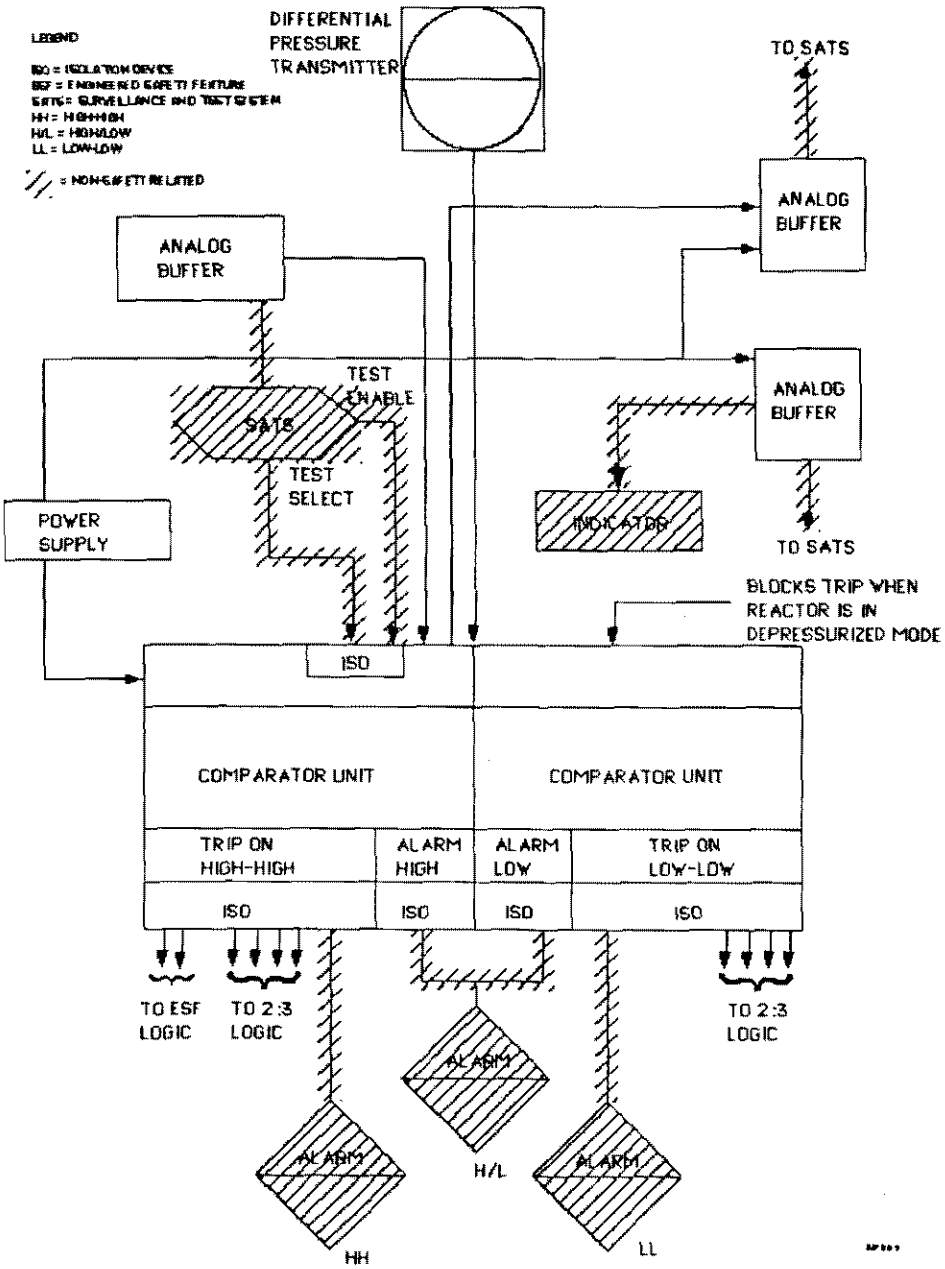

Figure 7.2-2. Typical Reactor Shutdown System vessel differential pressure subsystem. **(For Information Only)**

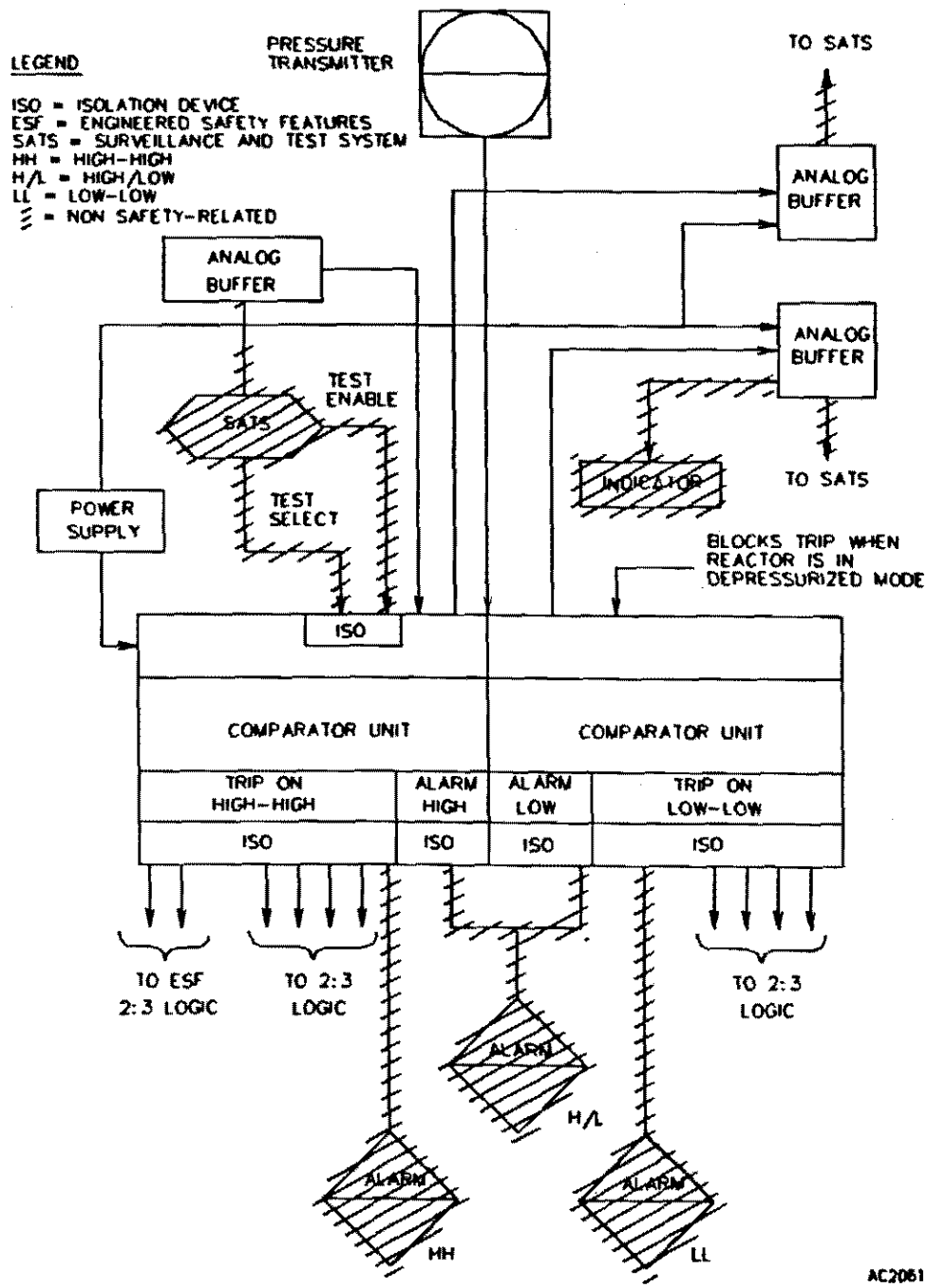

Figure 7.2-3. Typical Reactor Shutdown System vessel inlet pressure subsystem.
(For Information Only)

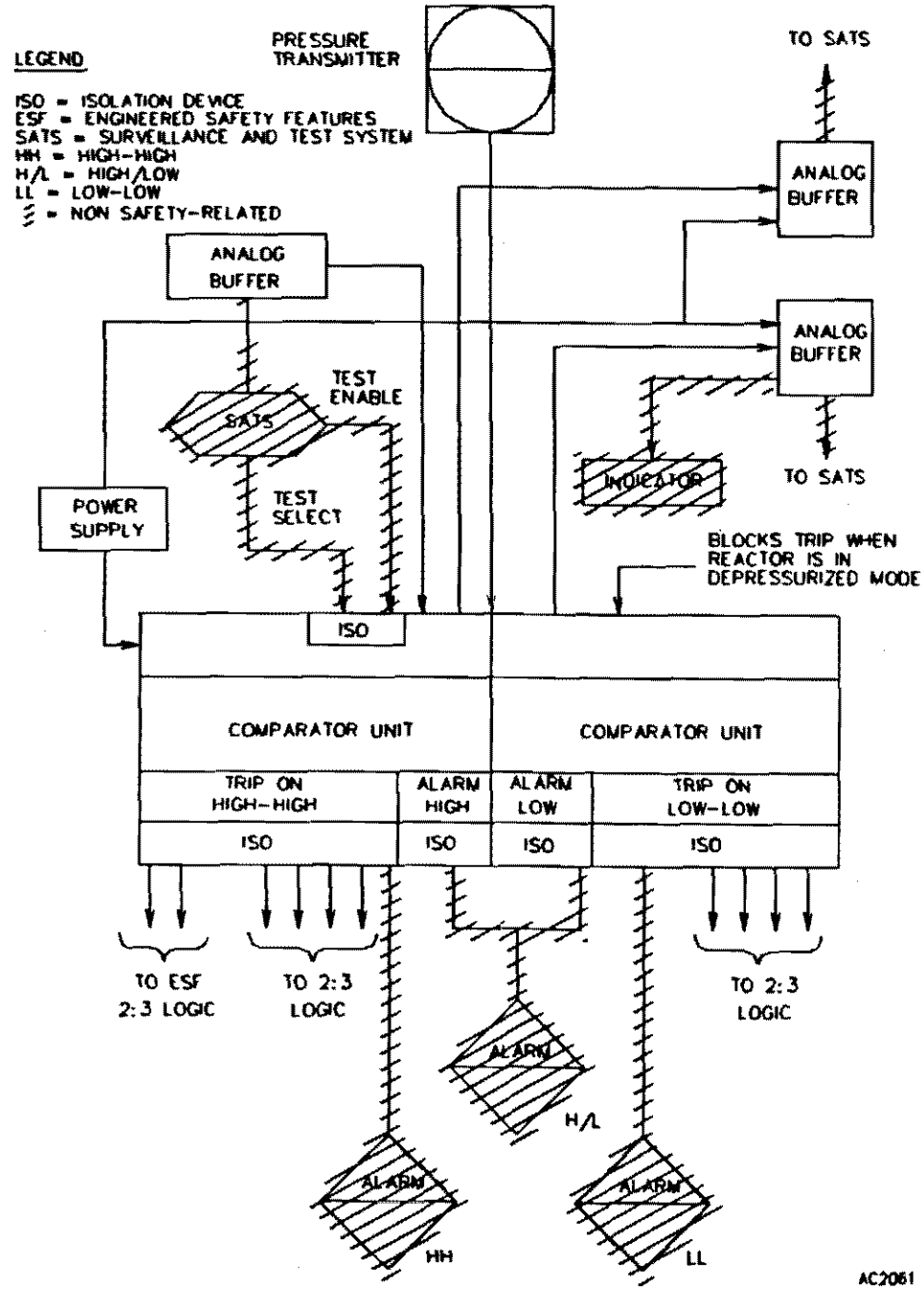

Figure 7.2-4. Typical Reactor Shutdown System vessel outlet pressure subsystem.
(For Information Only)

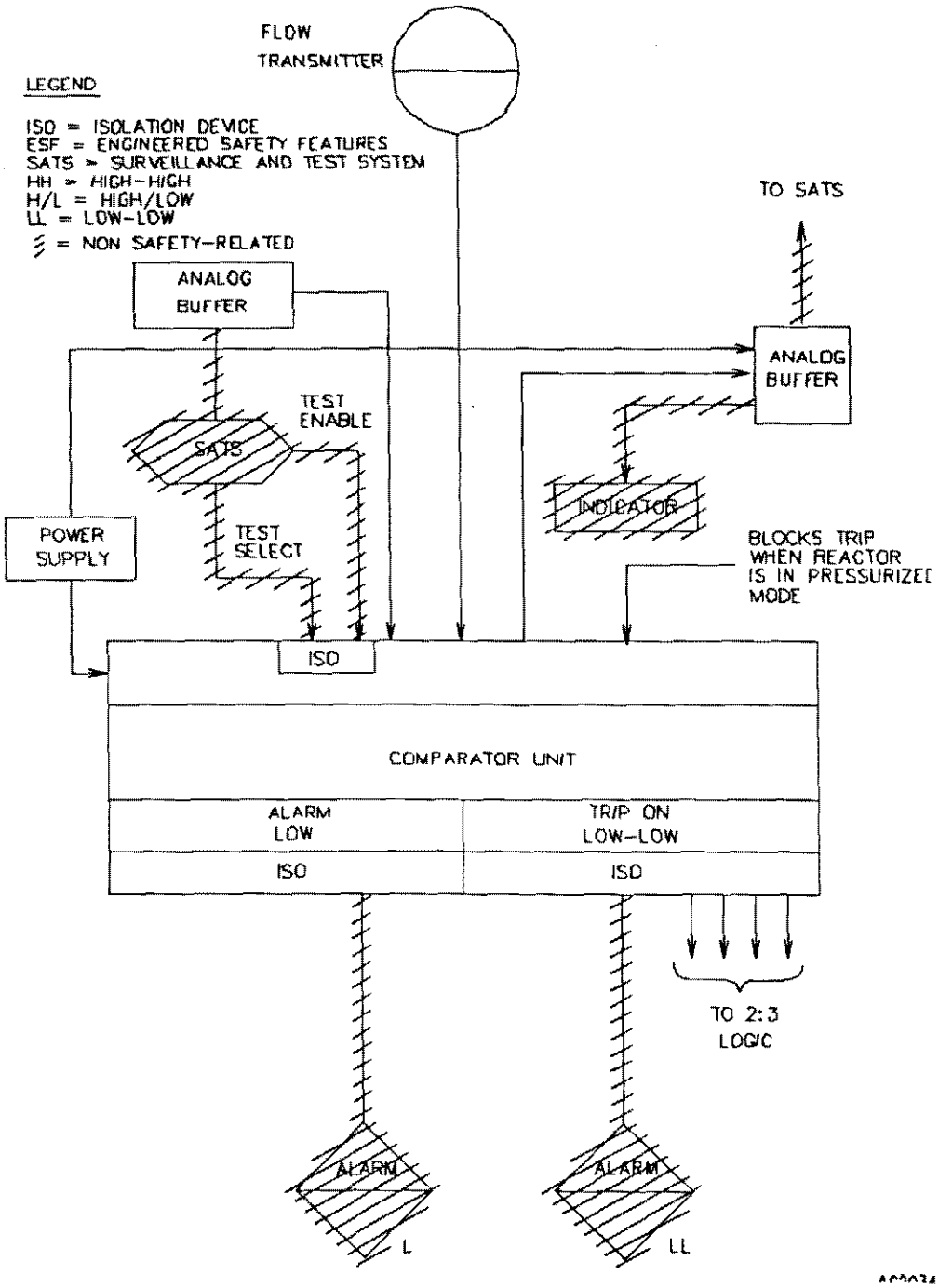

Figure 7.2-5. Typical Reactor Shutdown System emergency flow discharge subsystem. **(For Information Only)**

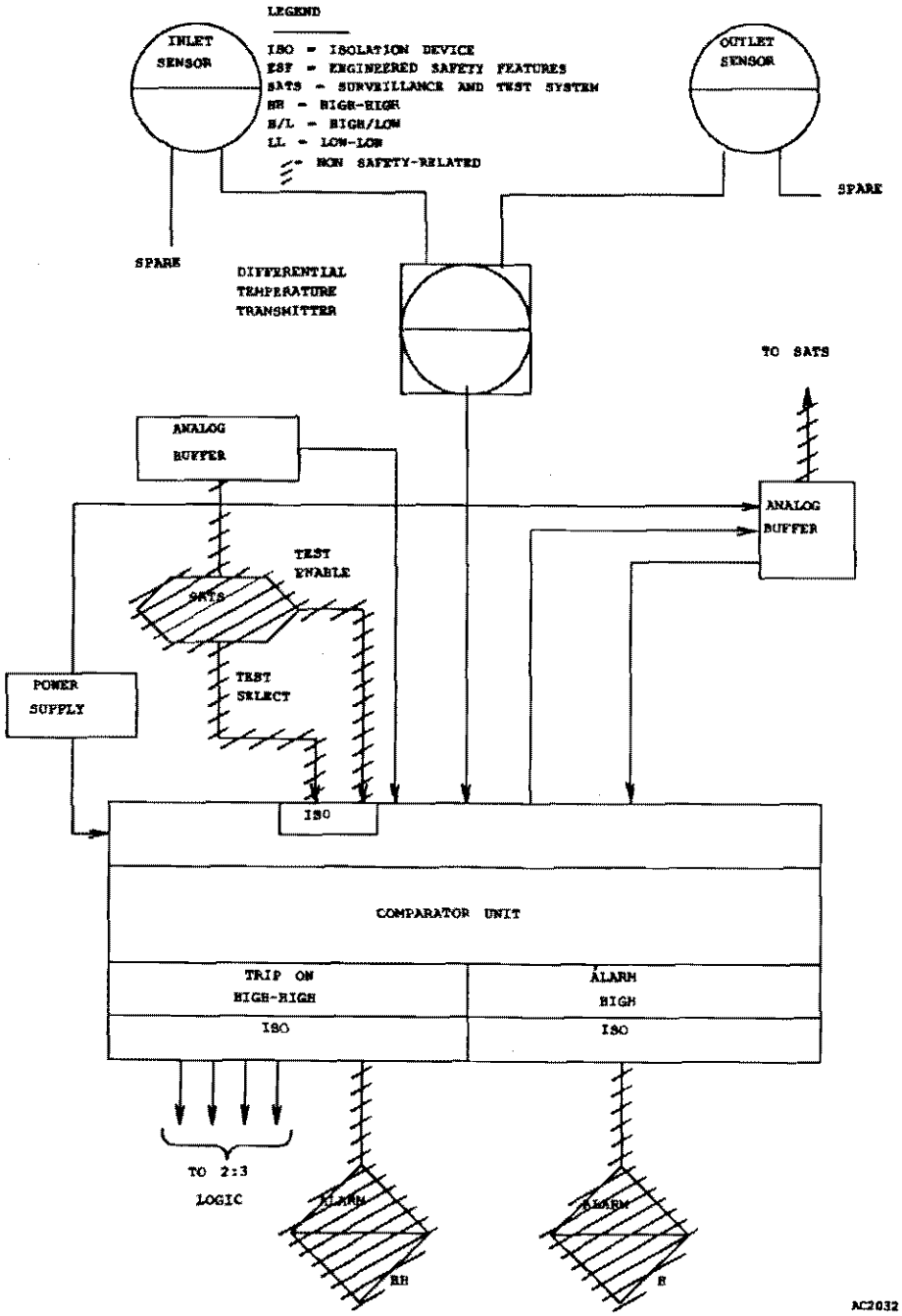

Figure 7.2-6. Typical Reactor Shutdown System quadrant Nos. 1, 2, 3, and 4 differential temperature subsystem. **(For Information Only)**

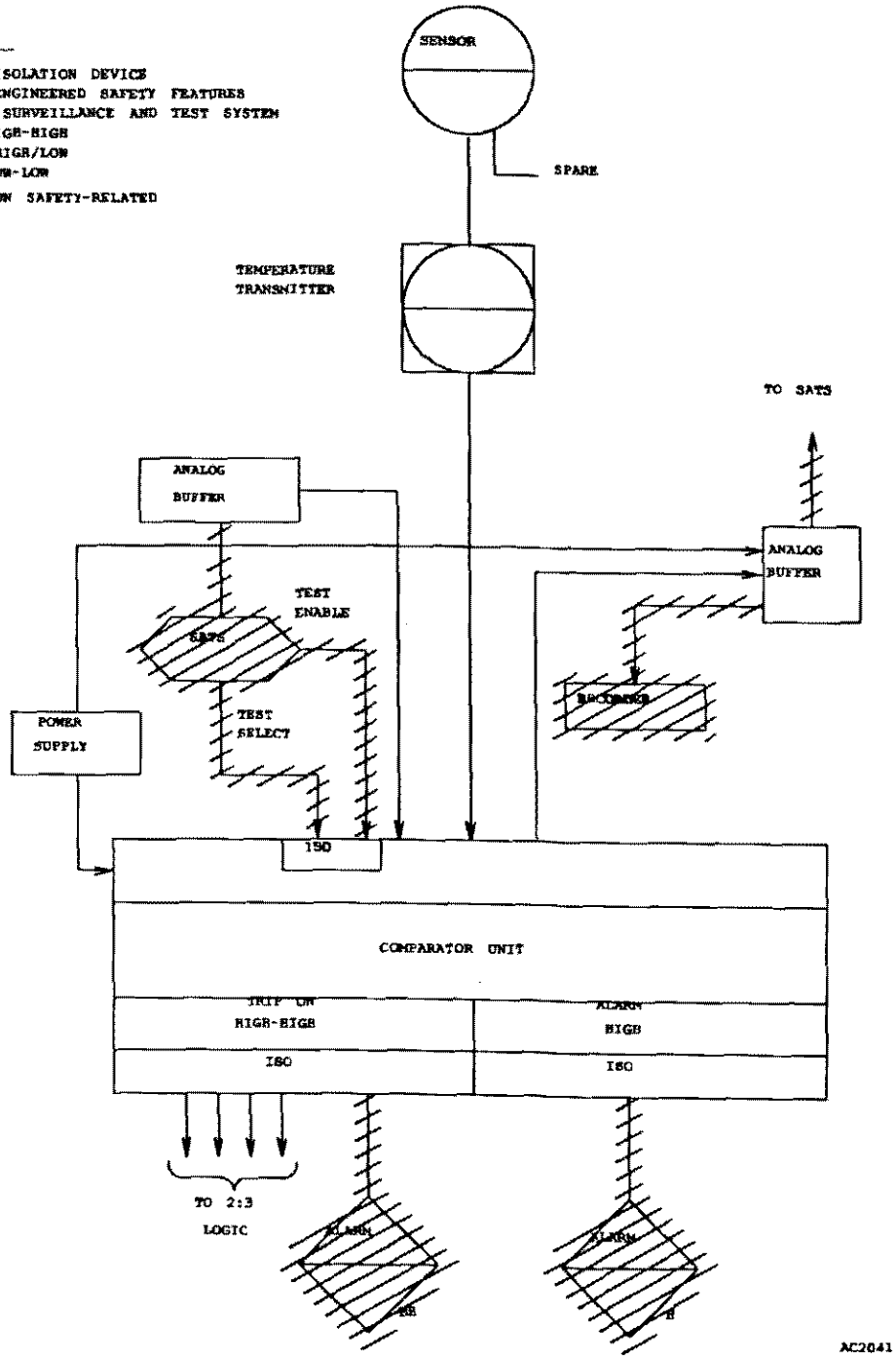

Figure 7.2-7. Typical Reactor Shutdown System inlet temperature subsystem. **(For Information Only)**

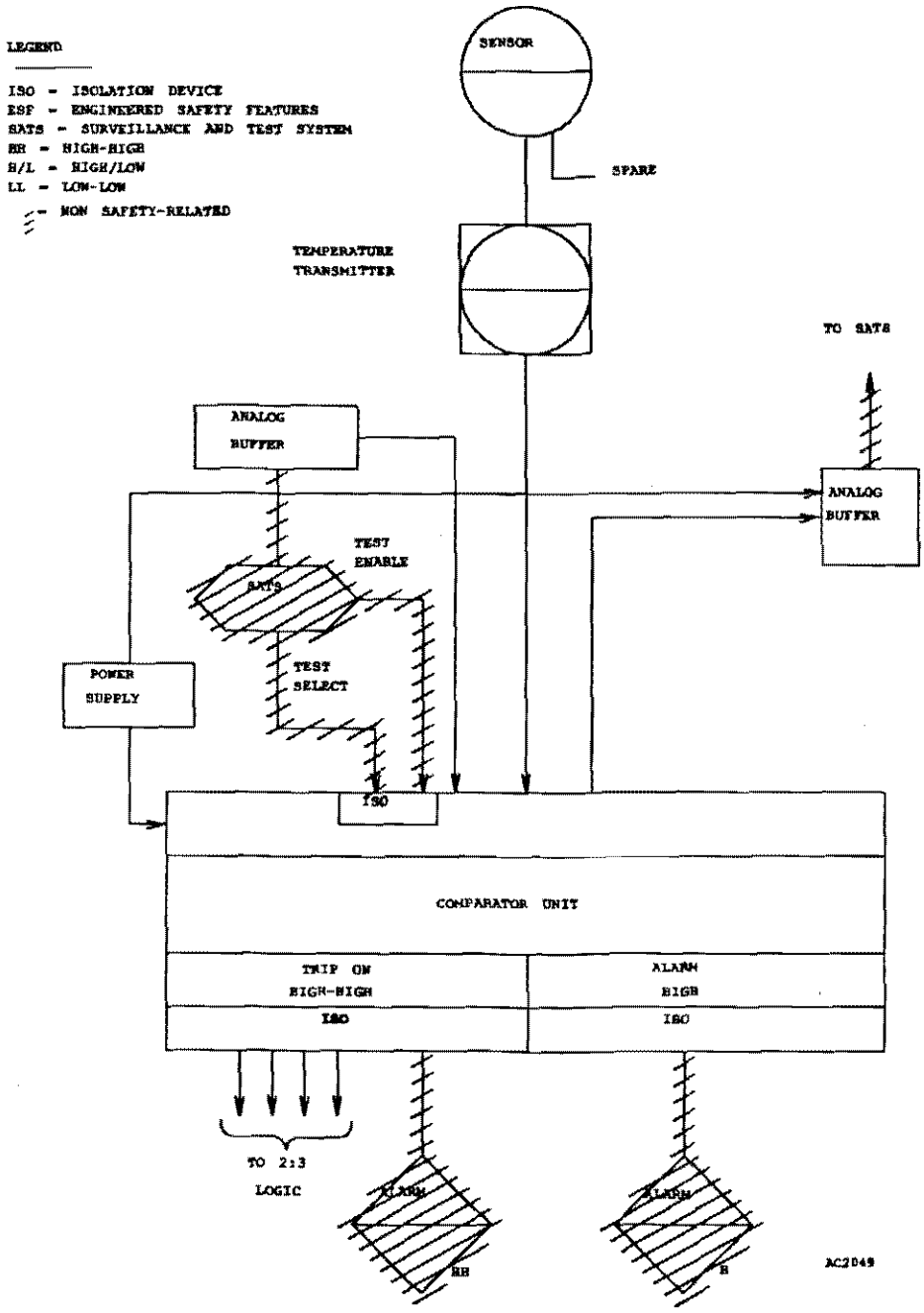

Figure 7.2-8. Typical Reactor Shutdown System outlet temperature subsystem. **(For Information Only)**

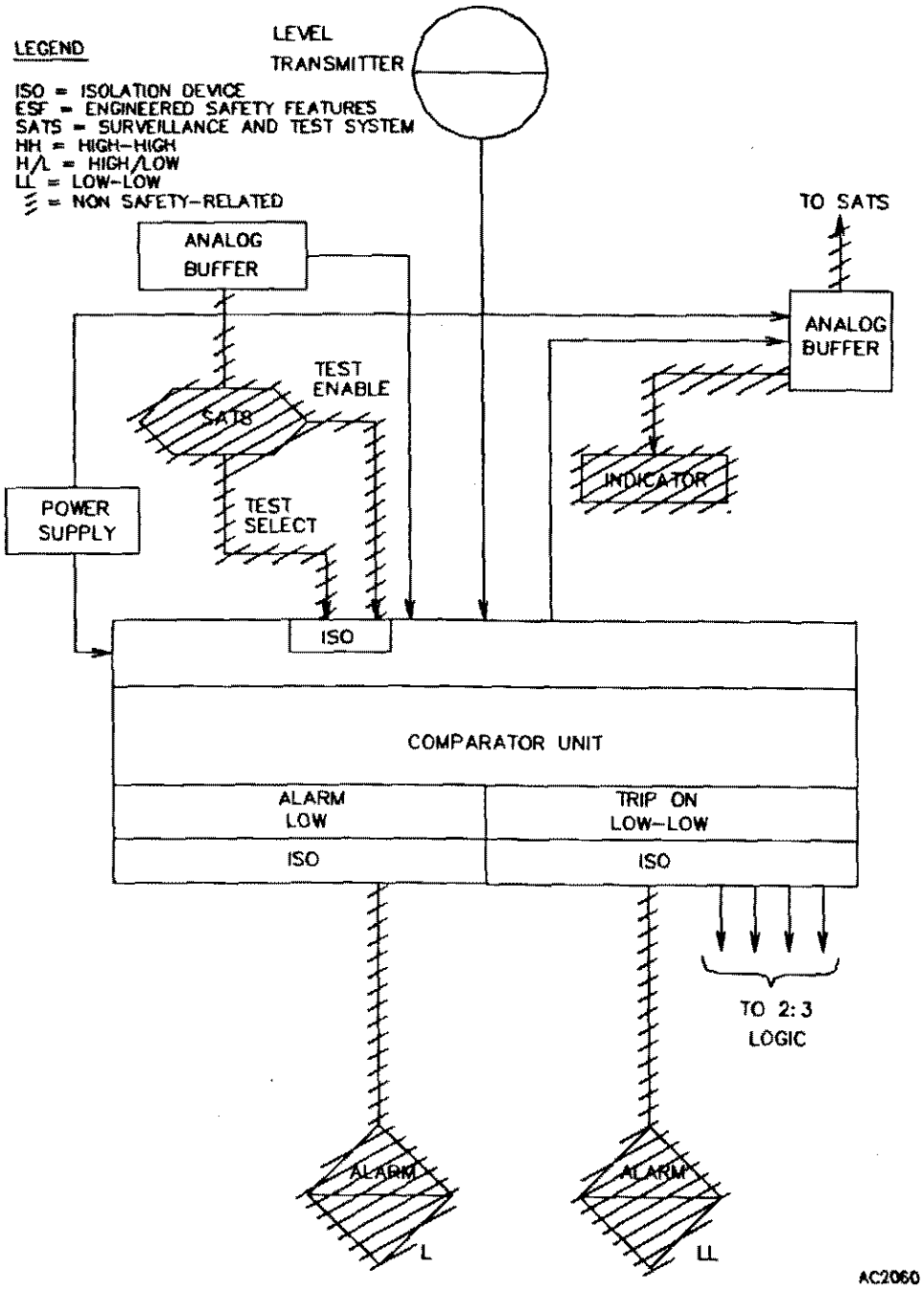

Figure 7.2-9. Typical Reactor Shutdown System vessel level subsystem. **(For Information Only)**

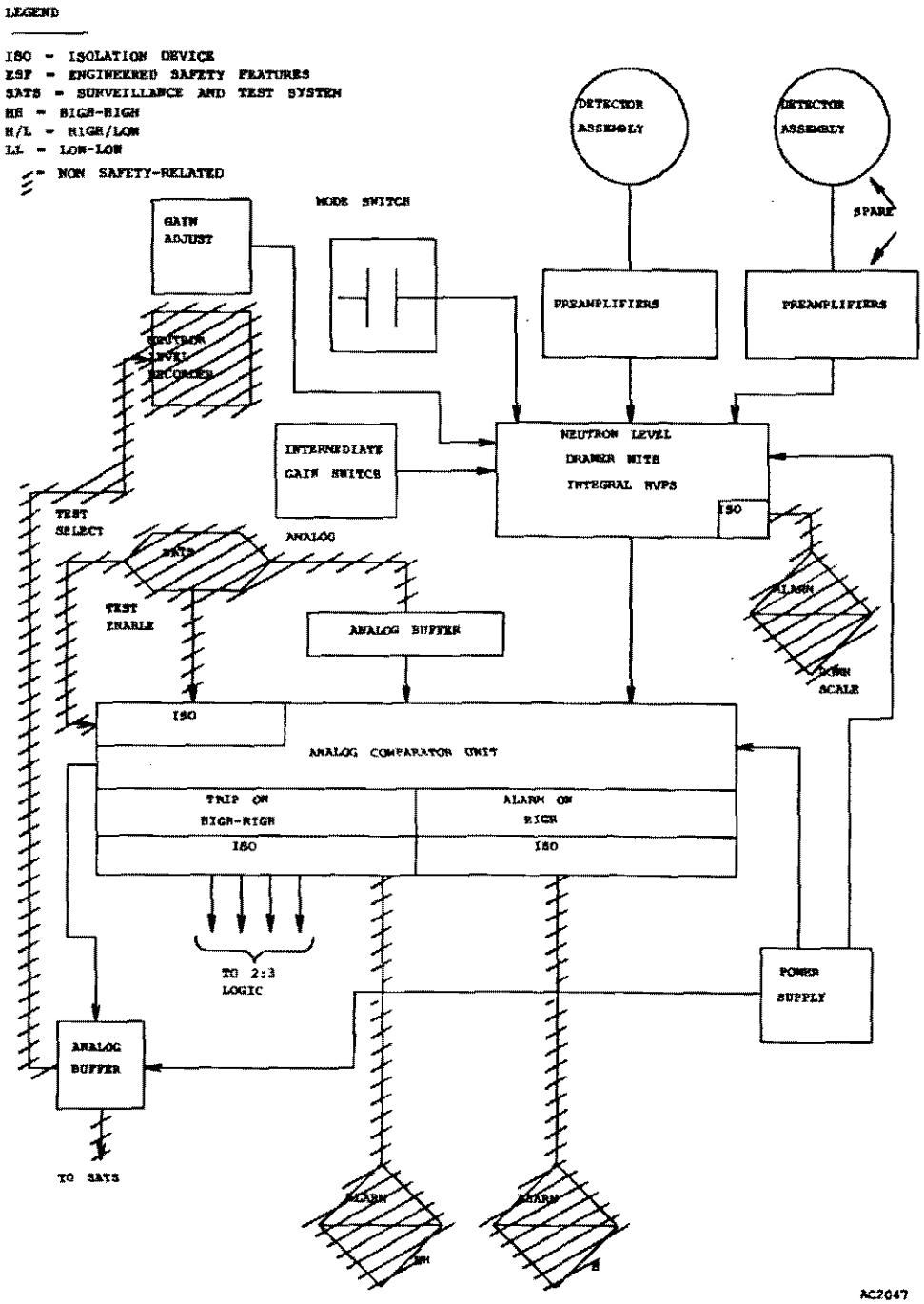

Figure 7.2-10. Typical Reactor Shutdown System neutron level subsystem. **(For Information Only)**

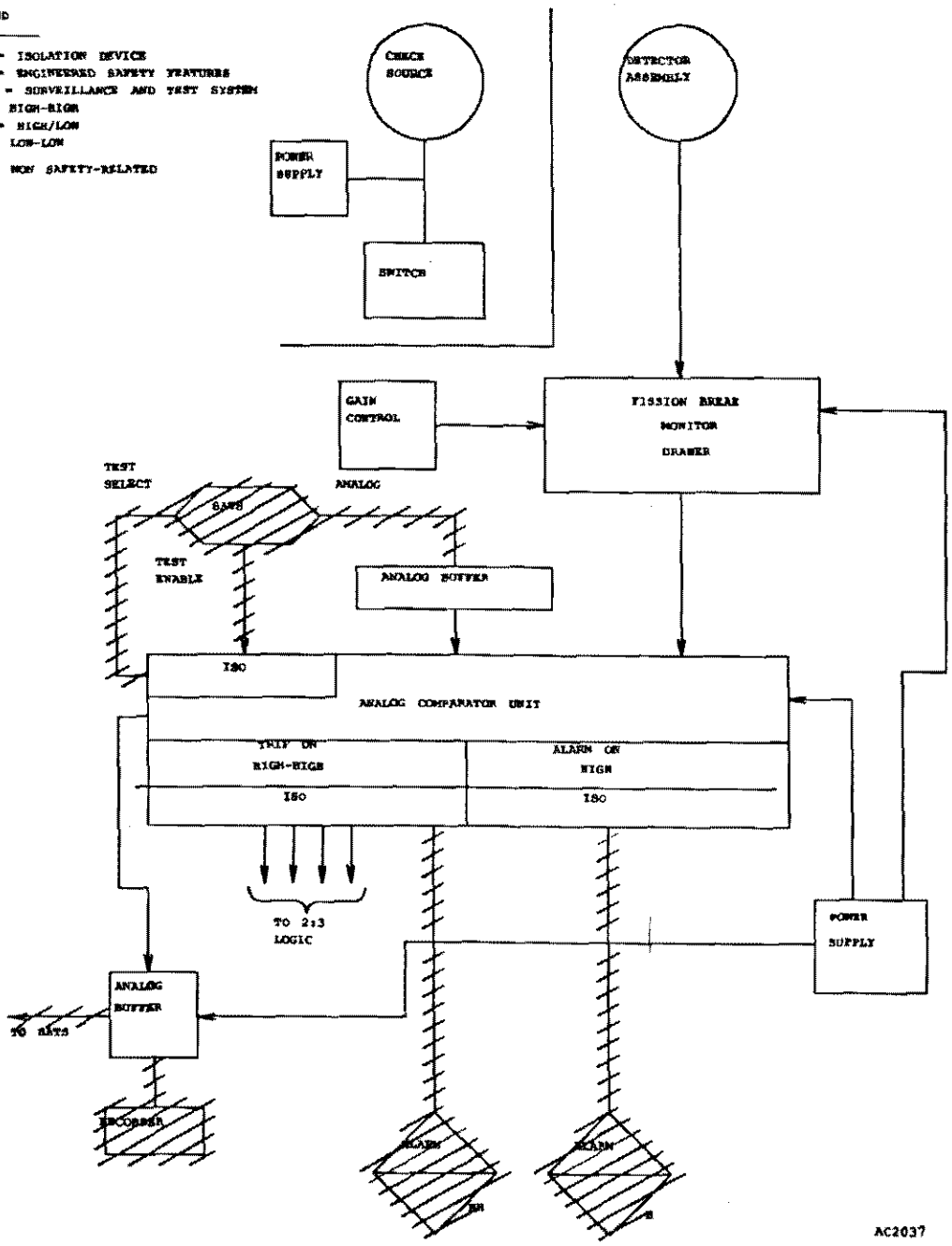

Figure 7.2-11. Typical Reactor Shutdown System fission break subsystem. **(For Information Only)**

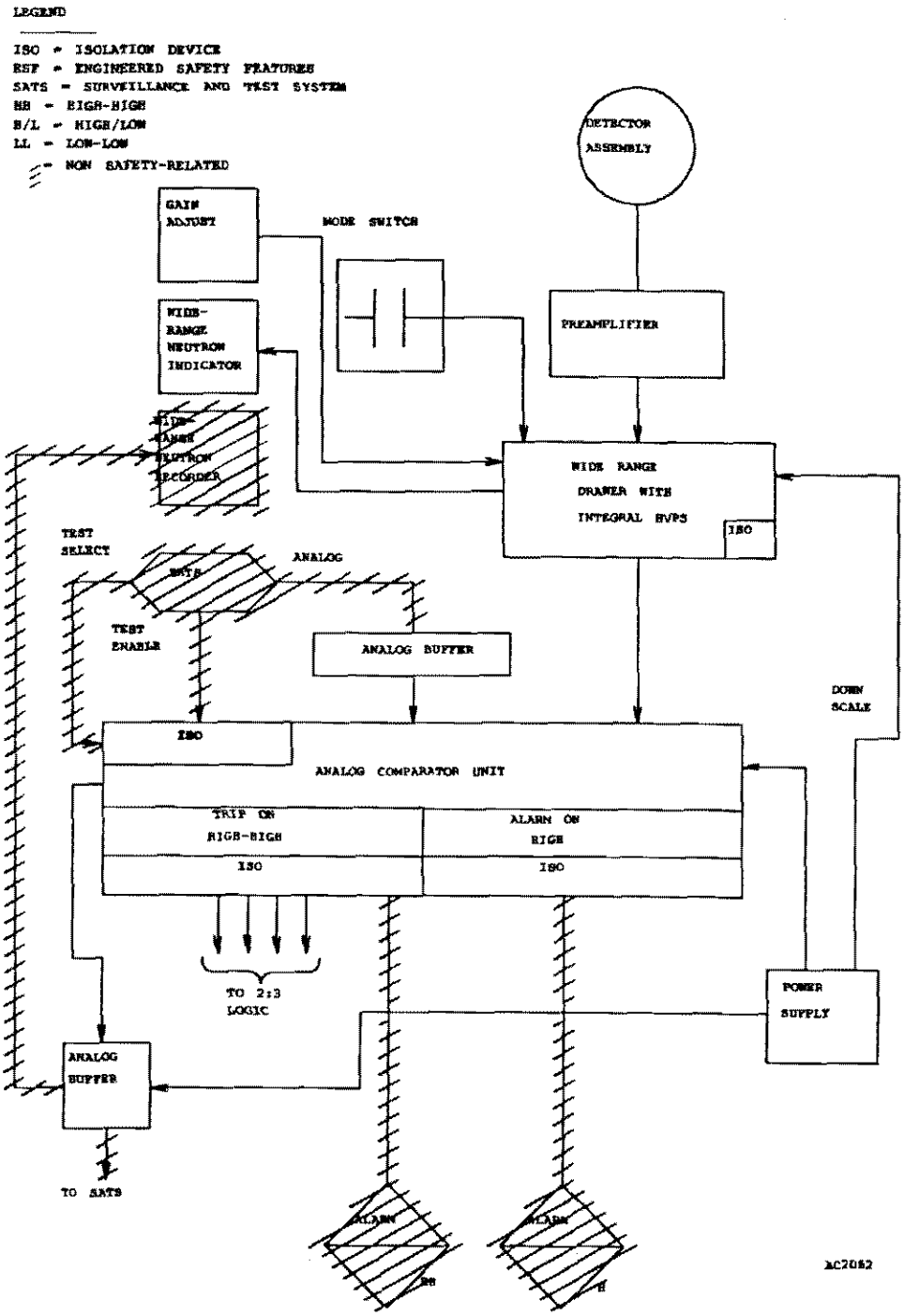

Figure 7.2-12. Typical Reactor Shutdown System wide-range neutron subsystem.
(For Information Only)

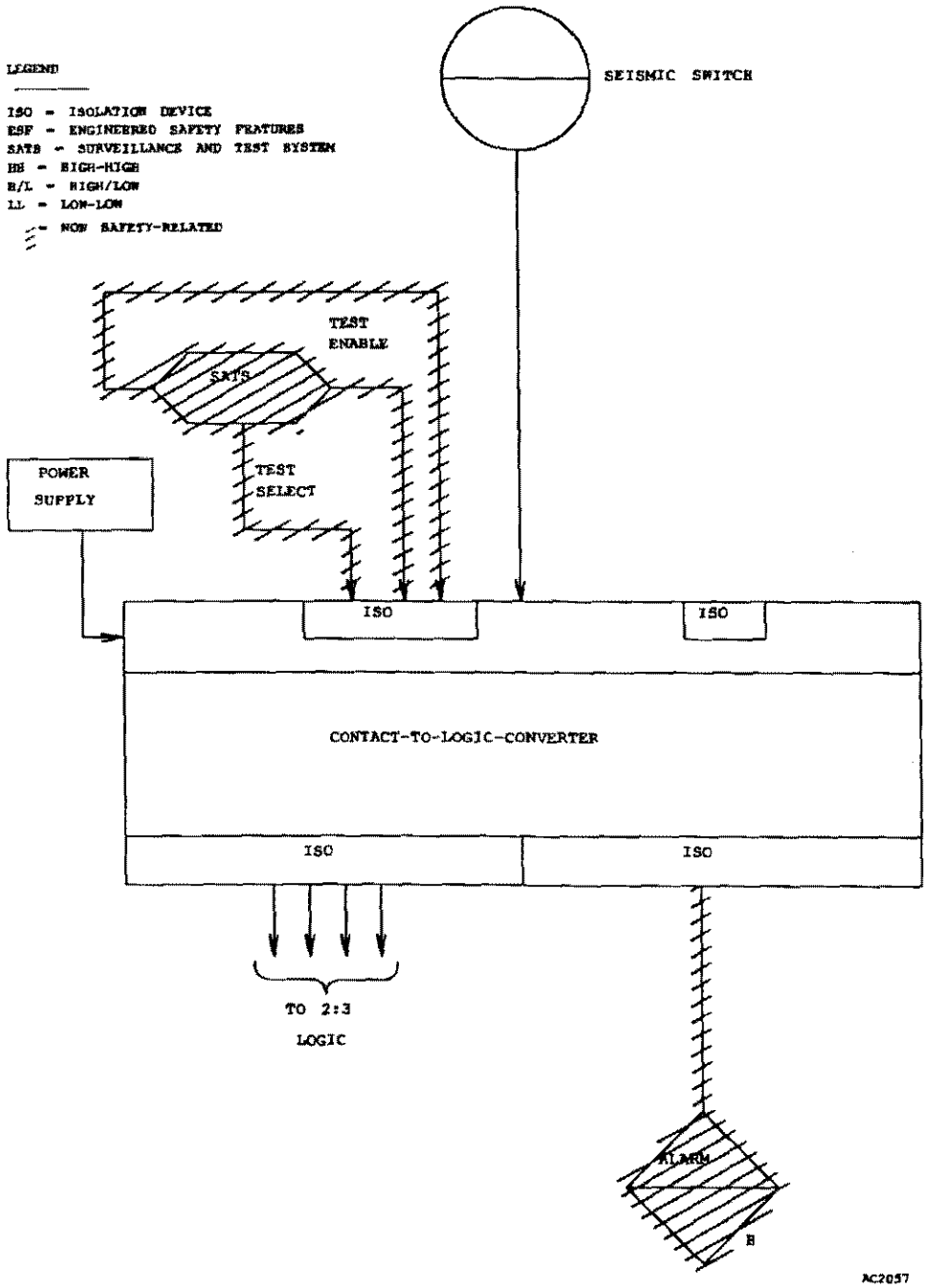

Figure 7.2-13. Typical Reactor Shutdown System seismic level subsystem. **(For Information Only)**

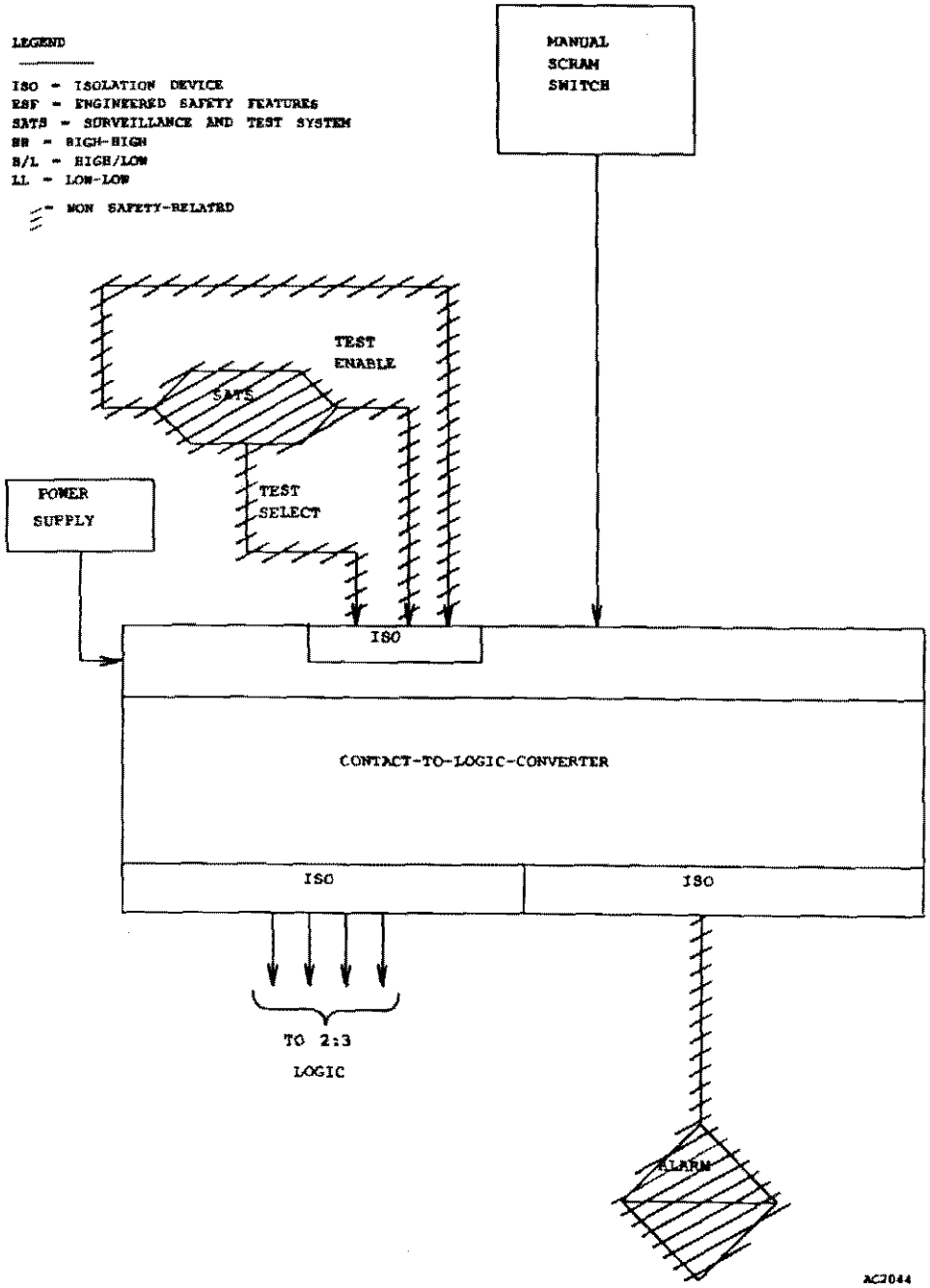

Figure 7.2-14. Typical Reactor Shutdown System manual scram subsystem. **(For Information Only)**

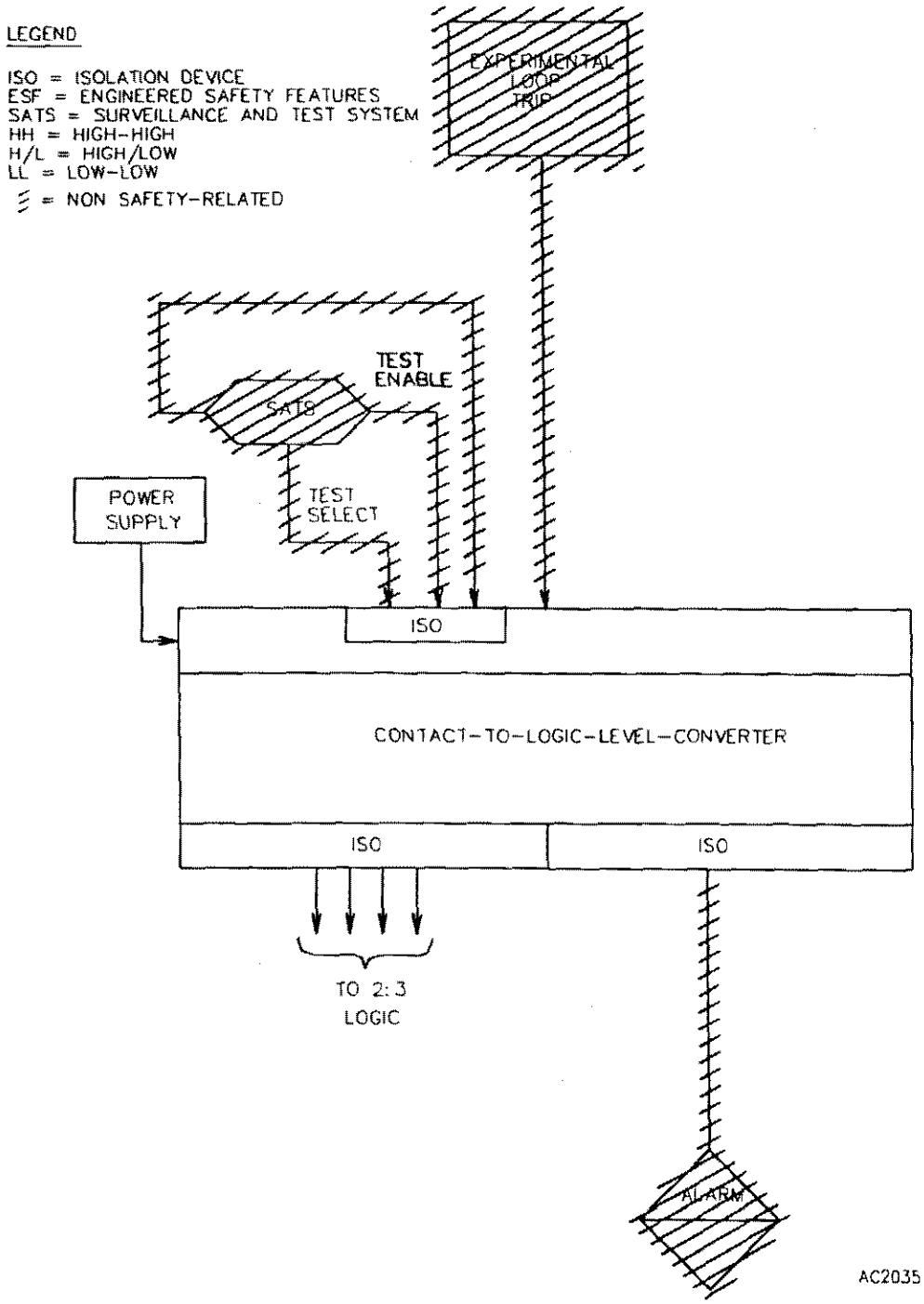

Figure 7.2-15. Typical Reactor Shutdown System experimental loops scram subsystem.
(For Information Only)

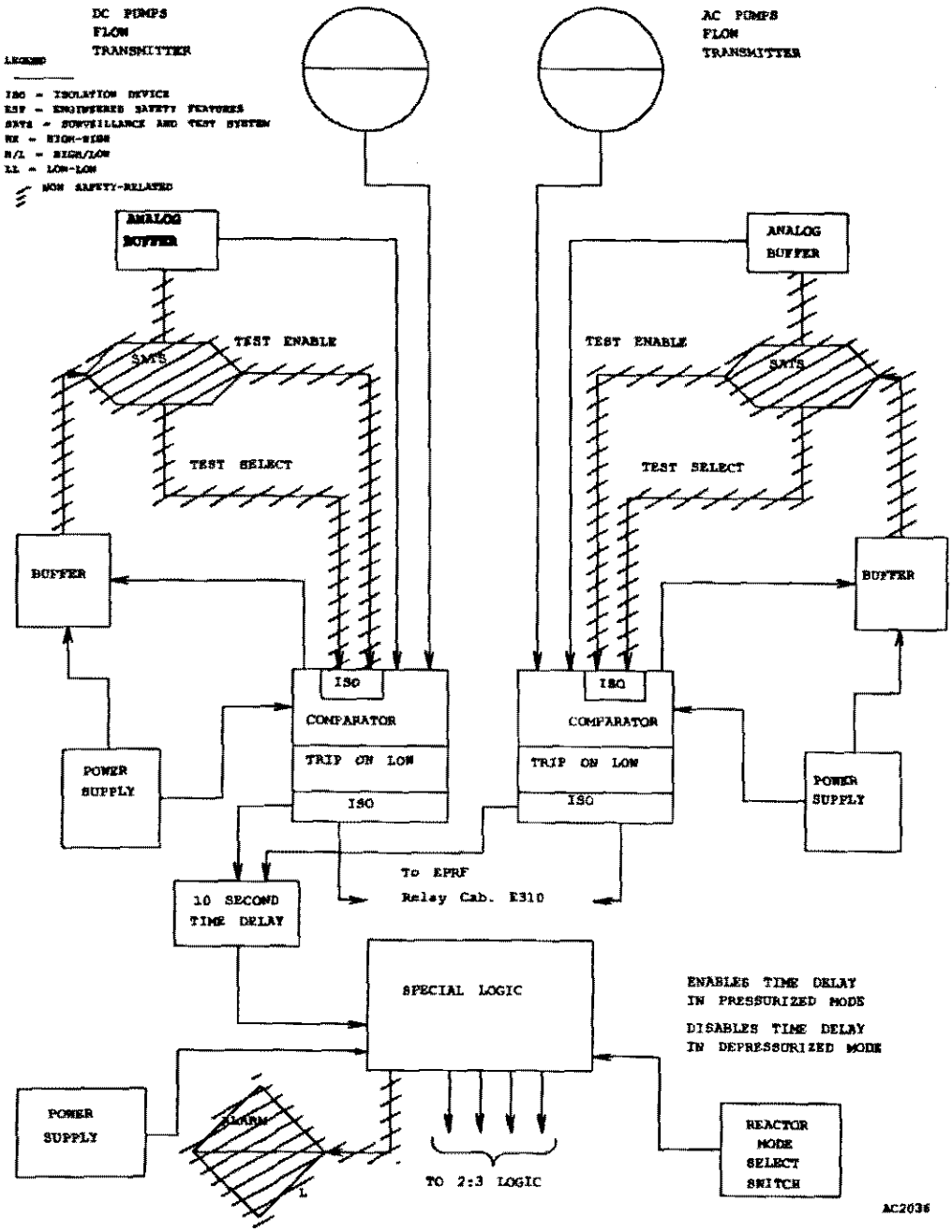

Figure 7.2-16. Typical Reactor Shutdown System emergency pumps recirculation flow subsystem. **(For Information Only)**

7.3 Engineered Safety Features Actuation Subsystems

The Engineered Safety Feature Actuation Subsystems (ESFASs) are control systems that initiate operation of Engineered Safety Features (ESF) after sensing abnormal transients in accident conditions. The systems that comprise the ESF are: Reactor Shutdown System (RSS) Primary Pump Shutoff System, RSS Pressurizing and Gland Seal Pump Shutoff System, Emergency Firewater Injection System (EFIS), Radiation Monitoring and Seal System (RMSS), Vessel Vent System (VVS), LOCA Primary Coolant Pump Shutoff System, and the Over-Pressure Relief System. The Over-Pressure Relief System is non-electrical and will not be discussed in Chapter 7. The Primary Pump Shutoff System, the Pressurizing and Gland Seal Pump Shutoff System, and the LOCA Primary Coolant Pump Shutoff System share instrument signals with the RSS, and are generally referred to as RSS pump shutoff systems.

7.3.1 RSS Primary Pump Shutoff System and RSS Pressurizing and Gland Seal Pump Shutoff System

7.3.1.1 RSS Primary Pump Shutoff System. During three-pump operation, the Primary Pump Shutoff System shuts down two primary coolant pumps before high flow rates through the reactor core can cause damage to the reactor internals. Due to the system logic, the pump shutoff system can also trip operating pumps during two-pump operation; however, no pump trip is required to protect the ATR during two-pump operation. Depending on the pumps selected for two-pump operation, either zero, one or two pumps will be shut off when the vessel differential pressure reaches the high differential pressure limit. A signal proportional to the difference between the reactor vessel's primary coolant inlet and outlet pressure is used as a trip. However, shutdown of one or more primary coolant pumps causes the coolant flow rate through the reactor core to fall below the design limit. The reactor is tripped whenever the vessel differential pressure exceeds the high design limit (EG&G Idaho 1994, Section 1.1).

7.3.1.1.1 Functional Performance Requirements—The Primary Pump Shutoff System automatically initiates a reactor trip and shuts down two primary coolant pumps during three-pump operation to prevent damage to the reactor internals.

7.3.1.2 RSS Pressurizing and Gland Seal Pump Shutoff System. The purpose of the Pressurizing and Gland Seal Pump Shutoff System is to protect the Primary Coolant System (PCS) from exceeding the system design pressure. Sensors monitoring the reactor vessel primary coolant inlet pressure provide a trip at high inlet pressure.

7.3.1.2.1 Functional Performance Requirements—The RSS Pressurizing and Gland Seal Pump Shutoff System prevents the PCS from exceeding design pressure by automatically initiating a reactor trip and shutting down both the primary pressurizing pumps and the gland seal pumps.

7.3.1.3 System Description, RSS Primary Pump Shutoff System and RSS Pressurizing and Gland Seal Pump Shutoff System

7.3.1.3.1 Instrumentation, RSS Primary Pump Shutoff System and RSS Pressurizing and Gland-Seal-Pump Shutoff System—The RSS Primary Pump Shutoff System block diagram is shown in Figure 7.3-1, and the RSS Pressurizing and Gland Seal Pump Shutoff System is shown in Figure 7.3-2. The analog differential pressure subsystems A, B, and C are shown in Figure 7.2-2. Cross hatching on figures indicates boundary between safety-related and nonsafety-related equipment. The PCS pressure boundary which includes the primary coolant pumps' pressure boundary is safety-related.

7.3.1.3.1.1 Sensors and Transmitters—A sensor and transmitter, or combination sensor/transmitter, measure a reactor process variable and provide an analog electrical output signal proportional to the variable being monitored. The RSS Primary Pump Shutoff System and RSS Pressurizing and Gland Seal Pump Shutoff System use common transmitters with the RSS.

7.3.1.3.1.2 Analog Comparator—Analog comparators monitor an analog signal from a sensor and transmitter, or a combination sensor/transmitter. When a signal reaches or exceeds preset limits, the comparator sends a trip signal to the two-out-of-three ESF logic modules. The RSS Primary Pump Shutoff System and RSS Pressurizing and Gland Seal Pump Shutoff System use common comparators with the RSS.

7.3.1.3.2 RSS Primary Pump Shutoff System Logic, and RSS Pressurizing and Gland Seal Pump Shutoff System Logic—Two sets of ESF logic are provided: one set for the high-high differential pressure trip to shut off two (during three-pump operations) of the primary coolant pumps, and one set for high-high vessel inlet pressure trip to shut off the pressurizing pumps and gland seal pumps. Each ESF logic comprises two ESF two-out-of-three logic modules and two ESF relay logic to interface with the pump trip circuitry. The ESF relays are mounted in two cabinets, each providing a set of relays for the primary pump trip circuitry. Relay logic for the gland seal pump is the same as for the pressurizing pump trip (INEEL 2000, Tables 1-3 and 1-7).

7.3.1.3.2.1 Logic Input Signals—Input signals to the ESF two-out-of-three logic modules are isolated analog comparator unit outputs which are separate from the analog comparator outputs that provide input to the subsystem logic. The input signals to the ESF logic can assume only two logic levels: untripped and tripped conditions. The tripped condition is provided to preclude a pump trip and resultant shutdown of the reactor upon module removal.

Input signals to the ESF relay logic are through optical isolators and provide for relay deenergization on untripped, and relay energization on tripped conditions (INEEL 2000, Section 2.4.4).

7.3.1.3.2.2 Logic Output Signals—The output signals of the ESF two-out-of-three logic modules can assume only two stable states: untripped and tripped conditions. The output of the ESF relay logic can assume only two stable conditions: (a) output relay contact open on untripped, and (b) output relay contact closed on tripped condition. The optical isolators in the ESF two-out-of-three logic modules and the relays selected for use in the ESF relay logic are sized to provide the appropriate interface between the low-level CMOS logic in the ESF two-out-of-three logic modules and the very-high-level voltages available in the pump trip circuitry. The ESF two-out-of-three logic modules are tested by the Surveillance and Test System (SATS). The ESF logic and test logic components are mounted on a single card. The test logic components in the ESF two-out-of-three logic modules are safety-related and appropriately qualified. All ESF two-out-of-three logic modules are interchangeable. Module connectors are designed to prevent interchanging any ESF two-out-of-three logic module with subsystem logic, division logic, or other modules. The ESF two-out-of-three logic modules are manufactured using integrated circuits of CMOS gates.

The ESF relay logic is not capable of being tested by the SATS because of a possible spurious pump trip and resultant reactor shutdown. However, the relay coil voltage is monitored with a low voltage alarm circuit to provide the operator with annunciators on loss of relay energization potential (INEEL 2000, Section 2.4.4.2).

7.3.1.3.3 RSS Primary Pump Shutoff System Logic—Figure 7.3-1 shows the output of the ESF two-out-of-three logic and Table 7.3-1 shows the output conditions. Under the conditions listed in Table 7.3-1, Pumps 7 and 9 are prevented from being tripped when they are the two pumps that are running.

7.3.1.3.4 RSS Pressurizing and Pump Shutoff System Logic—As shown in Figure 7.3-2, this system is a two-out-of-three logic system. If any two of the three input systems are tripped, both pressurizing pumps and both gland seal pumps will be shut down.

7.3.1.3.5 Operation—The ATR RSS provides for two modes of reactor critical operation: pressurized and depressurized operation. These two operating modes are distinguished by separate requirements for the number of RSS subsystems in operation for each mode and the required setpoints for each subsystem. The Primary Pump Shutoff System and the Pressurizing and Gland Seal Pump Shutoff System operate in each mode.

7.3.1.3.6 Interlocks and Blocks—The RSS Primary Pump Shutoff System and the RSS Pressurizing and Gland Seal Pump Shutoff System do not have interlocks or blocks.

7.3.1.3.7 System Configuration and Essential Features—See Section 7.2.1.1.7.

7.3.1.3.8 Redundancy and Diversity—Each system (RSS Primary Pump Shutoff System and the RSS Pressurizing and Gland Seal Pump Shutoff System) has two redundant ESF two-out-of-three logic channels. Sufficient redundancy ensures that the failure of any single channel or component will not constitute a failure of the system. Inlet pressure is diverse to vessel differential pressure, and outlet pressure is diverse to inlet pressure.

7.3.1.3.9 Seismic Operating Conditions—The RSS Primary Pump Shutoff System and the RSS Pressurizing and Gland Seal Pump Shutoff System are designed and constructed to remain operational and meet all functional requirements, as defined in the equipment design specifications, during and after an earthquake with an intensity no greater than the safe shutdown earthquake (SSE) (INEEL 2000, Section 2.2.5).

7.3.1.3.10 Power Supply and Environmental Variations—The power supplies for the RSS Primary Pump Shutoff System and the RSS Pressurizing and Gland Seal Pump Shutoff System are described in Chapter 8 (Electric Power). The environmental conditions in which these systems must function are given in Table 7.2.2.

7.3.1.3.11 Limits, Margins, and Setpoints—The parameter values that require pump trips are given in Chapter 15 (Accident Analyses).

7.3.1.4 Design Basis Information, RSS Primary Pump Shutoff System, and RSS Pressurizing and Gland Seal Pump Shutoff System

7.3.1.4.1 Applicable Codes and Standards—The RSS Primary Pump Shutoff System and RSS Pressurizing and Gland Seal Pump Shutoff System comply with the applicable portions of the standards listed in Section 7.2.1.3.1, with the exceptions stated in Section 7.2.1.3.2.

7.3.1.4.2 Trip Variable Functions and Corresponding Protective Actions—See Chapter 15 (Accident Analyses) for the following design basis events: butterfly valve opening incident and instrument air failure.

7.3.1.4.3 Operating Bypass Permissive Conditions—See Section 7.3.1.3.6.

7.3.1.4.4 Plant Variables—Monitored plant variables are the following:

- RSS Primary Pump Shutoff System
- Primary coolant pressure within the 36-in. inlet piping
- RSS Pressurizing and Gland Seal Pump Shutoff System
- Differential pressure across the reactor vessel.

7.3.1.4.5 Manual Control—Both systems use automatic operation, but both systems can be manually initiated.

7.3.1.4.6 Minimum Performance Requirements—Range selection for the instrumentation covers the expected range of the variables during power operation. Limiting safety system trip points are at least 5% from the end of an instrument span.

System Response Time:

The maximum allowable response times are:

RSS Primary Pump Shutoff System	0.6 sec
RSS Pressurizing and Gland Seal Pump Shutoff System	0.5 sec.

Trip Accuracies:

The maximum allowable trip point error is:

RSS Primary Pump Shutoff System	6.3 psid
RSS Pressurizing and Gland Seal Pump Shutoff System	18 psig.

Environmental:

Environmental specification data are in Table 7.2.2.

7.3.1.4.7 Credible Single Events—Same as RSS; see Section 7.2.1.3.3.3.

7.3.1.4.8 Tables—Table 7.2-1 shows the overall accuracy of the RSS Instrument Channel Subsystems. Table 7.2-2 lists the RSS Environmental Specifications. The condition for PCS pumps shutoff with high vessel differential pressure is stated in Table 7.3-1.

7.3.1.4.9 Block Diagrams—Block diagrams of the RSS Primary Pump Shutoff System are shown in Figure 7.3-1. Block diagrams of the RSS Pressurizing and Gland Seal Pump Shutoff System are shown in Figure 7.3-2.

7.3.1.5 Analysis, RSS Primary Pump Shutoff System, and RSS Pressurizing and Gland Seal Pump Shutoff System. See the analysis in Section 7.2.2, as it applies to the Differential Pressure Subsystem for the RSS Primary Pump Shutoff System, and Vessel Inlet Pressure Subsystem for the RSS Pressurizing and Gland Seal Pump Shutoff System.

7.3.2 Emergency Firewater Injection Actuation Subsystem

7.3.2.1 System Description. The Emergency Firewater Injection System (EFIS) provides emergency reactor core cooling and flooding of the reactor vessel in the event of a major break in the PCS piping. It also provides makeup for the long-term Complete Loss of Flow Accident (CLOFA) if other means are not available. This engineered safeguard is designed to activate at low pressure or at low water level in the reactor vessel.

The EFIS consists of three subsystems: Upper Vessel EFIS Piping, Bottom Head EFIS Piping, and EFIS Actuation. Only the EFIS Actuation Subsystem is discussed in this section. The other subsystems are discussed in Chapter 6 (Engineered Safety Features).

The EFIS Actuation Subsystem functions to control the valves that inject emergency cooling water into the reactor vessel to ensure that the reactor core will remain covered.

The EFIS Actuation Subsystem can be actuated by two different variables: pressure and vessel water level. Low pressure or low vessel water level activates both piping systems.

7.3.2.1.1 Transmitters—There are three level transmitters and three absolute pressure transmitters. Level transmitter output signals are sent to two comparators. Pressure transmitter output signals are sent to a single comparator.

7.3.2.1.2 Analog Comparators—Each comparator has an adjustable trip point, a setpoint for resetting actuation of valves, and four buffered trip outputs. When the trip point is exceeded, the comparator transmits a trip signal to four two-out-of-three logic modules. Each pair of comparators is located in a different RSS room. The comparator also provides an analog signal to a buffer unit. There are two comparators with each level channel, one each for the bottom head injection and for the upper vessel injection. There is also one comparator with each pressure transmitter that activates both the bottom head and upper vessel injections. The comparator has a momentary manual trip button for test. When the pressure comparator trips, the output remains in the tripped state until the comparator is manually reset by an operator.

7.3.2.1.3 Buffer Modules—The buffer is used to take an analog signal from the comparator and to provide outputs to the SATS, Reactor Data Acquisition System (RDAS), and the level indicators. The buffer provides electrical isolation between the RSS instrument channels and non-RSS equipment.

7.3.2.1.4 Two-Out-of-Three Logic Modules—The EFIS Actuation Subsystem comprises three sets of four two-out-of three logic modules. One set is used for the bottom head actuation, a second set is used for upper vessel actuation, and a third set actuates both the bottom head and the upper vessel when the vessel pressure reaches the low setpoint. Each two-out-of-three logic module takes signals from the Channel A, B, and C comparators and gives a trip output when two of the three comparator signals are in a tripped condition. Each two-out-of-three pressure logic module controls a relay with two sets of contacts. These relay contacts may be jumpered (bypassed) when the Primary Coolant System (PCS) is depressurized to prevent actuation of valves during normal shutdown periods with the vessel level at the upper drain. A trip condition from any two modules will cause a valve actuation signal. A module can be removed from the system for maintenance without tripping the system.

7.3.2.1.5 Relay Logic Panel—Each set of bottom head or upper vessel level control valves is actuated by two-out-of-four relay logics. These relays are located in panels in each RSS room. Logic sets are isolated from each other. Each level control valve actuation signal is routed from a different RSS room. Also located on the door of each of these four panels is a bypass switch (for bypassing the low pressure actuation) and lights to indicate the status of switch.

7.3.2.1.6 Power—The 30 Vdc power to drive the transmitters is supplied by the comparator's PPS 24 Vdc power supply via a dc-dc converter. The 32 Vdc power to drive the logic relays and the dump valves is supplied by the 32 Vdc distribution in RSS Rooms A and C. See Chapter 8 (Electric Power) for additional information.

7.3.2.1.7 Instrument Air—Instrument air [Chapter 9, (Auxiliary Systems)] holds the solenoid EFIS valves closed, and is backed up by bottled nitrogen gas. Activation of the dump valves results in depressurization of the solenoid chamber, causing the valves to open.

7.3.2.1.8 Manual Trip—A manual trip is provided so a reactor operator has the capability to actuate the EFIS whenever the actuation is judged necessary.

7.3.2.2 Design-Basis Information, Emergency Firewater Injection System (EFIS)

7.3.2.2.1 Applicable Codes and Standards—The EFIS was designed and built to the following standards, and complies with the applicable portions of the following standards. The version of each standard most current as of January 1, 1983 was used for the instrumentation.

NE (RDT) standards:

C 1-1T	Instrumentation and Control Equipment Grounding and Shielding Practices
C 16-1T	Supplementary Criteria and Requirements for RDT Reactor Plant Protective Systems
F 2-9T	Reliability Assurance
F 4-20T	Operation and Maintenance Manuals
F 7-2T	Packaging, Packing, and Marking of Components for Shipment and Storage
F 7-3T	Marking of Components and Parts

Other Codes and Standards:

NRC Regulatory Guides (To the extent they augment the requirements of SDD 7.7.1, ATR Emergency Firewater Injection System, and applicable NE Standards.)

10 CFR 50, Appendix B	Quality Assurance Criteria for Nuclear Power Plants and Fuel Reprocessing

Department of Defense

MIL-HDBK-217	Reliability Prediction of Electronic Equipment

Department of Energy (Idaho Operations Office)

Operational Safety Standards, ID Appendix 0550	Standard Operational Safety Requirements
IDO-12044	Operational Safety Design Criteria Manual

The Contractor

STD-7027	Electrical and Electronic Fabrication (Installation only)
STD-7022A	Cleanliness Acceptance Levels for Nuclear and Nonnuclear Service Components

National Fire Protection Association (NFPA)

ANSI/NFPA National Electrical Code

Institute of Electrical and Electronic Engineers

IEEE 279-1971	Criteria for Protection Systems for Nuclear Power Generating Stations

American National Standards Institute (ANSI)

ANSI N45.2	Quality Assurance Program Requirements for Nuclear Facilities

7.3.2.2.2 Plant Conditions—The design basis event is a Loss of Coolant Accident (LOCA), and the purpose of the EFIS is to prevent or mitigate damage to the reactor core in the event of a LOCA during operation or shutdown.

It is undesirable to operate the EFIS in automatic mode when the PCS is depressurized because a single failure could automatically actuate the EFIS and thereby flood the pressure vessel with raw water at any PCS pressure below the EFIS pressure. The EFIS is therefore operated manually (by controlling the isolation valve) during depressurized or shutdown operation. During shutdown conditions the pressure portion of actuation system is bypassed to prevent actuation of the valves during normal conditions with the vessel level at the upper drain.

7.3.2.2.3 Safety Functions and Corresponding Protective Actions—For a LOCA, the EFIS monitors the reactor vessel pressure and water level and actuates the firewater valves causing firewater addition for decay heat removal.

Under some break conditions where the PCS drops below atmospheric pressure, water would flash in the impulse lines to the water level sensor for the EFIS. In this case, the water level may not initiate EFIS injection, but the vessel pressure will initiate EFIS injection.

7.3.2.2.4 EFIS Variables—The monitored variables are vessel level and vessel pressure.

7.3.2.2.5 Manual Control—All EFIS operations are automatic except for the manual trip and opening the isolation valve during depressurized operation. A separate manual actuator is provided in the reactor control room for each set of the bottom head level control valves, and the upper vessel level control valves. Provisions are made for the reactor operator to manually open the control valves for any event or condition in which the reactor operator believes the firewater should be injected into the reactor core.

All EFIS variables are displayed for the operator's use in taking manual action.

7.3.2.2.6 Abnormal Events—The malfunctions, accidents, or other unusual events that could physically damage the EFIS or cause environmental changes are as follows:

- Earthquakes [See Chapters 2 (Site Characteristics) and 3 (Design of Structures, Components, Equipment, and Systems).]
- Fire [See Chapter 9 (Auxiliary Systems).]
- Explosion - hydrogen buildup within the confinement area [See Chapter 6 (Engineered Safety Features).]
- Missiles [See Chapter 3 (Design of Structures, Components, Equipment, and Systems).]
- Flood [See Chapters 2 (Site Characteristics) and 3 (Design of Structures, Components, Equipment, and Systems).]
- Wind and tornadoes. [See Chapter 3 (Design of Structures, Components, Equipment, and Systems).]

7.3.2.2.7 Plant Conditions and Safety Functions—The setpoints for initiation and termination to the level and pressure systems do not overlap. Reset of either actuation system will not terminate EFIS injection if the other actuation system is still in the tripped state. The pressure trip will lock-in and must be manually reset with operator action. EFIS injection will continue until this trip is manually reset.

7.3.2.2.8 Tables—EFIS performance requirements are shown in Table 7.3-2. ATR environmental specifications for the EFIS are shown in Table 7.3-3. ATR Emergency Firewater Injection Actuation Subsystem protective functions are shown in Table 7.3-4.

7.3.2.2.9 Block Diagrams—The EFIS Detector and Logic Diagram is shown in Figure 7.3-3. The EFIS Actuation Subsystem Logic Diagram is shown in Figure 7.3-4. The Instrument Air and the N_2 Backup are not safety-related. Cross hatching on figures indicates boundary between safety-related and nonsafety-related components.

7.3.2.3 Emergency Firewater Injection Actuation Subsystem Analysis. A detailed fault-tree model was developed and quantified as part of the ATR Probabilistic Risk Assessment (PRA). The level of detail represented components such as relay modules, logic modules, comparators, and level transmitters. Probabilistically significant failure modes for all the components were identified. In addition, internal flooding and fire events were investigated as part of the external events analysis for the ATR PRA. No flooding events such as pipe rupture, inadvertent fire suppression system actuation, or fire events were found to cause single failure events that would fail the Emergency Firewater Injection Actuation Subsystem.

The fault-tree model demonstrates the reliability of the system design to perform its intended function and shows that the Emergency Firewater Injection Actuation Subsystem complies with the intent of the single failure criteria of IEEE 279-1971. No single failure was found that could prevent the Emergency Firewater Injection Actuation Subsystem from generating the proper actuation signal on demand. Failures are either in the safe direction, or a redundant channel or train ensures the necessary actuation capability.

7.3.2.3.1 Evaluation of Compliance to Applicable Codes and Standards—The EFIS Actuation Subsystem meets the intent of GDC Nos. 2, 4, 13, 19, 20, 21, 22, 23, 24, 29, and IEEE 279-1971 as indicated below.

7.3.2.3.1.1 Single Failure Criterion—The PPS is designed to concurrently achieve high system reliability, high system availability, and a low probability of spurious EFIS trips. The system uses three separate pressure and level channels. The two-out-of-three logic gives a trip output when two of the three comparator signals are in a tripped condition. Each two-out-of-three module takes signals from separate channels and comparators, and then gives a trip output when two of the three comparator signals are in a tripped condition. Each two-out-of-three logic module controls a relay with two sets of normally open contacts. A trip condition from any two modules will cause a valve actuation signal. A module can be removed from the system for maintenance without tripping the system. Each set of bottom head or upper vessel level control valves is actuated by two-out-of-four relay logics. Logic sets are isolated from each other. Each level control valve actuation signal is routed from a different RSS room. These redundant channels are electrically isolated, physically separated, and functionally diverse. Thus, any single failure within a channel or logic train will not prevent protection at the system level when required. Loss of input power to a channel will result in that channel being tripped. This design meets the intent of GDC 23.

To prevent the occurrence of common mode failures, additional measures are employed, such as functional diversity, physical separation, and testing, as well as administrative control during design, production, installation, and operation (EG&G Idaho 1994).

This design meets the intent of GDC 21 and 22.

7.3.2.3.1.2 Equipment Qualification—ATR Equipment Qualification is addressed in Chapter 3.

7.3.2.3.1.3 Channel Independence—Channel independence is carried throughout the system, extending from sensor to activating device. Physical separation achieves separation of redundancy and is accomplished by using separate wire ways, cable trays, and conduit runs for each redundant channel. Redundant equipment is separated by locating equipment in different protection cabinets. Each redundant system is isolated from the other redundant systems by a separate power supply [Chapter 8, (Electric Power)].

Electrical isolation is provided between safety-related and nonsafety-related EFIS equipment. Electrical isolation is also provided between redundant channels of safety-related EFIS equipment, and between safety-related equipment in different EFIS separation groups.

Physical separation is maintained between redundant equipment in different separation groups, and between safety-related and nonsafety-related EFIS equipment (INEEL 2003).

This design meets the intent of GDC Nos. 21 and 24.

7.3.2.3.1.4 Redundancy—The EFIS design employs redundancy in each portion of the system to achieve high system availability concurrently with a low probability of spurious trips. In each subsystem, a single failure can be tolerated without loss of the protective function. (INEEL 2003)

The design meets the intent of GDC Nos. 21 and 22.

7.3.2.3.1.5 Control and Protection System Interaction—The protection system is designed to be independent and isolated from other systems. In certain applications, signals derived from individual protective channel isolation amplifiers are used in the annunciator system, computer recording, SATS, and system monitoring. The isolation amplifiers are classified as part of the protection system and are located in the analog protection racks. The isolation amplifiers are designed such that short circuit, open circuit, or the application of credible fault voltages from within the cabinets on the isolated nonprotective side of the circuit will not affect the protective side of the circuit. The signals obtained through the isolation amplifiers are never returned to the protection racks (INEEL 2003).

This design meets the intent of GDC No. 24 and Section 4.7 of IEEE 279-1971.

7.3.2.3.1.6 Derivation of System Inputs—To the extent feasible and practical, protection system inputs are derived from signals that are direct measures of the desired variables. Monitored variables for the EFIS are listed in Section 7.3.2.2.4.

7.3.2.3.1.7 Capability for Sensor Checks—A method is available for checking with a high degree of confidence the operational availability of each system input sensor during reactor operation and shutdown. The Surveillance and Test System (SATS) provides cross checking between channels that bear a known relationship to each other during reactor operating and shutdown conditions.

7.3.2.3.1.8 Periodic Testing and Inspection—The SATS provides real-time online testing for surveillance and fault diagnosis of the EFIS to ensure safe operation of the ATR. All the EFIS instrument systems and logic are tested periodically to determine whether the EFIS is operable. If not operable, faulty EFIS modules are identified for quick replacement. The SATS injects programmed analog and binary voltages into selected EFIS test points to monitor responses to the stimuli. The SATS also monitors status to observe actual levels and logic states, temporarily storing the values of all monitored parameters (EG&G Idaho 1977d).

In addition to the SATS, each module and instrument has manual test features to enable locally testing the module for operation.

Preventive maintenance involves periodic inspection, cleaning, lubrication, and parts replacement to maintain component and system performance levels. These tasks are conducted by following the procedures and recommendations provided by the manufacturers' instruction manuals, the Facilities and Maintenance Manual, and the ATR Detailed Operating Procedures.

This design meets the intent of GDC 21 and IEEE Std. 279, Sections 4.21 and 5.7.

7.3.2.3.1.9 Channel Bypass or Removal from Operation—The system is designed to allow any one channel to be maintained as required during power operation. One channel can be tested or calibrated without initiating a protective action at the system level, and the EFIS can continue to meet the single failure criterion (INEEL 2003).

Actuation from the pressure portion of the actuation system may be bypassed through the use of switches located on the relay logic panel in each of the four PPS rooms. The TSR allows the switch to be in the bypassed condition during certain PCS shutdown/startup conditions. Status of the switch is provided by indicating lights near each switch. Additionally, an alarm is provided in the reactor control room on Panel P-11 if any of the four switches is in the bypass position.

7.3.2.3.1.10 Operational Bypass—The TSR allows the EFIS to be made operable in the manual mode by closing the isolation valve. The isolation valves are manual block valves. It is undesirable to valve in the EFIS (open the isolation valve) when the PCS is depressurized because a single failure could automatically actuate the EFIS, thereby flooding the pressure vessel with raw water at any PCS pressure below the EFIS pressure. This action only inhibits flooding the core; the rest of the EFIS, including the annunciator system, is still operable. Administrative control is used to control this bypass, and both isolation valves of both systems are locked open during pressurized operation.

7.3.2.3.1.11 Indication of Bypass—Both isolation valves on both EFISs are alarmed to indicate that the valves are other than fully open and are monitored in the control room.

7.3.2.3.1.12 Completion of Protective Action—The EFIS is designed to activate when the water level lowers to a predetermined height above the top of the reactor core or on low vessel pressure. During certain loss of coolant accidents (LOCA), local saturation conditions in the vessel may occur and may cause the vessel level measurement to malfunction. The low pressure setpoint is designed to actuate the EFIS during such events. Once the EFIS is initiated on a vessel level trip, the vessel water level will cycle between the lower and upper level limits. In an event where the firewater flow is initiated upon low pressure, the valves will open and operator action is necessary to reset the valves to stop the flow of firewater.

7.3.2.3.1.13 Manual Initiation—Switches are provided in the reactor control room to manually initiate the protective action. A failure in the automatic protective system does not prevent actuation of the protective function. Manual actuation relies on a minimum of equipment.

7.3.2.3.1.14 Indication of Protective Actions—The indication of protective actions is similar to the RSS. See Section 7.2.2.16 for detailed information.

7.3.2.3.1.15 Identification—ATR has a program in place for labeling equipment and wiring in the *Operations* manual.

7.3.3 Radiation Monitoring and Seal System

7.3.3.1 Description. The Radiation Monitoring and Seal System (RMSS) is an engineered safety feature for the control of significant release of airborne radioactive contamination from the ATR building.

The activation for the RMSS is composed of three independent channels' stack exhaust monitoring equipment and actuation logic that activate two sets of quick closing dampers. Each channel consists of the following: (a) a chamber, check source, preamplifier, and high voltage power supply located in a room in the breach of the stack; (b) an amplifier, comparator, buffer, and power regulators in the ATR RSS rooms; and (c) a recorder and annunciators in both the reactor control room and the Radiological Control Technician (RCT) office. The comparator outputs are combined into the two-out-of-three logic modules located in separate RSS rooms. The outputs of the logic module feed four solid state relays in the RCT office. These relays are wired into the existing RMS-1 relays such that isolation will occur when the relays are deenergized. Check source push buttons, power supplies, and a control switch to manually initiate RMS-1 shutdown are located in the reactor control room. The dampers are monitored through limit switches by the Reactor Data Acquisition System (RDAS). Both open and closed positions are monitored.

The system actuates the building isolation system when any two detectors sense high radiation. Each system can be manually actuated with control switches. One switch de-energizes the ventilation fans and closes the primary dampers. The other switch de-energizes the ventilation fans and closes the backup dampers. Both switches close the isolation valves to the Argon Delay Line System.

A block diagram of the system is shown in Figures 7.3-5 and 7.3-6. Cross hatching on figures indicates boundary between safety-related and nonsafety-related equipment and components.

7.3.3.1.1 Design Basis Information, Radiation Monitoring and Seal System

7.3.3.1.1.1 Applicable Codes and Standards—The RMSS was designed and built to the following standards and complies with the applicable portions of the following standards with the exceptions stated in the following sections. The version of each standard most current as of January 15, 1979 was used for the instrumentation.

C 1-1T	Instrumentation and Control Equipment Grounding and Shielding Practices
C 14-1T	Ventilation Exhaust Radiation Monitoring System
C 14-2T	Area Radiation Monitoring System
C 16-1T	Supplementary Criteria and Requirements for RDT Reactor Plant Protective Systems
C 16-2T	Protection System Logic (Interface Requirement Only)
C 16-3T	PPS Buffers
C 17-4T	General Instrumentation

Other Codes and Standards:

EG&G Idaho STD-7027	Electrical and Electronic Fabrication
NEC-78	National Electrical Code
INEL Architectural Engineering Standard	
IDO-12044	Operational Safety Design Criteria Manual

7.3.3.1.1.2 RMSS Variables—The monitored variable is stack exhaust radiation.

7.3.3.1.1.3 Safety Functions and Corresponding Protective Action—The safety function is confinement isolation, and the corresponding protective actions are shutoff of supply, exhaust, ventilation fans, and closure of containment dampers in the confinement portion of the reactor building boundary.

7.3.3.1.1.4 Operating Bypass Permissive Conditions—The RMSS does not have any operational bypasses.

7.3.3.1.1.5 Manual Control—All RMSS operations are automatic; however, the operators can manually activate the RMSS in any event or condition that requires reducing the spread of radiation. Two switches are available to manually activate the RMSS. One switch de-energizes the ventilation fans and closes the primary dampers. The other switch de-energizes the ventilation fans and closes the backup dampers. Both switches close the isolation valves to the Argon Delay Line System.

All RMSS variables are displayed for the operators to use in taking manual operation.

7.3.3.1.1.6 Credible Single Events—The malfunctions, accidents, or other unusual events that could physically damage the Reactor Shutdown System or could cause environmental changes are as follows:

- Earthquakes [See Chapters 2 (Site Characteristics) and 3 (Design of Structures, Components, Equipment, and Systems)]
- Fire [See Chapter 9 (Auxiliary Systems)]
- Explosion - hydrogen buildup within the confinement area [See Chapter 6 (Engineered Safety Features)]
- Missiles [See Chapter 3 (Design of Structures, Components, Equipment, and Systems)]
- Flood [See Chapters 2 (Site Characteristics) and 3 (Design of Structures, Components, Equipment, and Systems)]
- Wind and tornadoes [See Chapter 3 (Design of Structures, Components, Equipment, and Systems)].

7.3.3.1.1.7 Tables—List of protective functions for the Containment Isolation Subsystem Stack Exhaust Radiation Monitors is shown in Table 7.3-5. ATR subsystem performance requirements for the Containment Isolation Subsystem Stack Exhaust Radiation Monitors are shown in Table 7.3-6. ATR environmental specification ranges for the Radiation Monitoring and Seal System (RMSS) are shown in Table 7.3-7.

7.3.3.1.1.8 Block Diagrams—Radiation Monitoring and Seal System Diagram (one of three), Part 1 is shown in Figure 7.3-5. Radiation Monitoring and Seal System Diagram, Part 2 is shown in Figure 7.3-6.

7.3.3.2 Radiation Monitoring and Seal System Analysis. A Probabilistic Risk Assessment (PRA) has been performed for the Advanced Test Reactor. See Section 5.2, Confinement Analysis, of the *Update to the Advanced Test Reactor Probabilistic Risk Assessment (Level 1, 2 and 3 Including Shutdown Operation)* (Thatcher et al. 1994).

7.3.3.2.1 Evaluation of Compliance to Applicable Codes and Standards—The RMSS meets the criteria of the GDC and the standards in the Design Basis Section 7.3.3.1.1 as indicated in the following subsections with the stated exceptions.

7.3.3.2.1.1 Essential Performance Requirements—The RMSS complies with the criteria listed in Tables 7.3-5, 7.3-6, and 7.3-7.

7.3.3.2.1.2 Classification of PPS Equipment—Only equipment necessary to perform the RMSS functions is classified as part of the PPS. The RMSS complies with RDT C 16-1T, Paragraphs 3.1.2, 3.1.4, and 4.2.3.

7.3.3.2.1.3 Defense Against Failures—The RMSS is designed to concurrently achieve high system reliability, high system availability, and a low probability of spurious RMSS trips. The system uses three separate stack exhaust monitoring channels. Each two-out-of-three logic module takes signals from separate channels and comparators and gives a trip output when two of the three comparator signals are in a tripped condition. Each two-out-of-three logic module controls a relay with two sets of normally open contacts. A trip condition from any two modules will cause a damper actuation signal. The RMS-1 relays are activated by one-out-of-four relay logic. Logic sets are isolated from each other. These redundant channels are electrically isolated, physically separated, and functionally diverse. Thus, any single failure within a channel or logic train will not prevent protection at the system level when required. This design meets the intent of GDC No. 23.

To prevent the occurrence of common mode failures, additional measures are employed, such as functional diversity, physical separation, and testing as well as administrative control during the design, production, installation, and operation. Confinement seal dampers are designed such that they will close upon loss of instrument air pressure. This design meets the intent of GDC Nos. 21 and 22 (EG&G Idaho 1986, Section 1).

7.3.3.2.1.4 Independence of PPS and Other Systems—Channel independence is carried throughout the system, extending from sensor to activating device. Physical separation achieves separation of redundancy by using separate wire ways, cable trays, and conduit runs for each redundant channel. Redundant equipment is separated by locating equipment in different protection cabinets. Each redundant system is isolated from the other redundant systems by a separate power supply and 24-volt regulator; however, the 24-volt regulators are shared with the fission break channel in the RSS. Since the fission break system and RMSS are independent and unrelated functions, failure of the common regulator will not create a safety problem.

Electrical isolation is provided between safety-related and nonsafety-related RMSS equipment. Electrical isolation is also provided between redundant channels of safety-related RMSS equipment and between safety-related equipment in different RMSS separation groups.

Physical separation is maintained between redundant equipment in different separation groups and between safety-related and nonsafety-related RMSS equipment.

This design meets the intent of GDC Nos. 21 and 24, and C 16-1T, Section 4.3.

7.3.3.2.1.5 Independence from Control Systems—The protection system is designed to be independent and isolated from other systems. In certain applications, signals derived from individual protective channel isolation amplifiers are used in the annunciator system, computer recording, SATS, and system monitoring. The isolation amplifiers are classified as part of the protection system. The isolation amplifiers are designed such that short circuit, open circuit, or the application of credible fault voltages from within the cabinets on the isolated nonprotective side of the circuit will not affect the protective side of the circuit. The signals obtained through the isolation amplifiers are never returned to the protection racks. This design meets the intent of GDC No. 24 and Section 4.3.1 of RDT C 16-1T (EG&G Idaho 1986).

7.3.3.2.1.6 RMSS Input—The inputs to the RMSS are gamma sensitive ion chambers and provide a direct measurement of gamma. In the event of a radioactive release from ATR, gamma radiation would be the part of the release that would be detected.

The RMSS complies with RDT C 16-1T, Section 4.5.1.

7.3.3.2.1.7 Capability for Sensor Checks—A method is available for checking with a high degree of confidence the operational availability of each system input sensor during reactor operation and shutdown. The SATS provides cross-checking between channels that bear a known relationship to each other during reactor operating and shutdown conditions.

7.3.3.2.1.8 Channel Bypass or Removal from Operation—The system is designed to allow any one channel to be maintained as required. One channel can be tested or calibrated during power operation without initiating a protective action at the system level (EG&G Idaho 1986, Section 1.2.9).

7.3.3.2.1.8.1 Operational Bypass—The RMSS is not operationally bypassed.

7.3.3.2.1.9 Multiple Setpoints—The same setpoints are used in all modes of operation.

7.3.3.2.1.10 Equipment Qualification—ATR Equipment Qualification is addressed in Chapter 3.

7.3.3.2.1.11 Periodic Testing and Inspection—The SATS provides real-time online testing for surveillance and fault diagnosis of the RMSS to ensure safe operation of the ATR. All RMSS instrument systems and logic are tested periodically to determine whether the RMSS is operable. If not operable, faulty RMSS modules are identified for quick replacement. The SATS injects programmed analog and binary voltages into selected RMSS test points to monitor response to the stimuli. In addition, SATS is used to monitor status; i.e., to observe actual levels and logic states. SATS temporarily stores the values of all monitored parameters.

In addition to the SATS, each module and instrument has manual test features to enable locally testing the module for operation. Each product specification for the modules and other equipment of the ATR RMSS requires that these devices be easily calibrated and maintained. Any special calibration equipment is furnished with the equipment supplied. See Chapter 17 (Quality Assurance) for additional information.

Preventive maintenance involves periodic inspection, cleaning, lubrication, and parts replacement to maintain component and system performance levels.

This design meets the intent of GDC No. 21 and RDT C 16-1T, Section 4.6 (EG&G Idaho Specification No. ES-70125) (EG&G Idaho 1977d).

7.3.3.2.1.12 Identification—ATR has a program in place for labeling equipment and wiring in the *Operations* manual.

7.3.4 Description, Vessel Vent System

The Vessel Vent System (VVS) provides the capability to depressurize the ATR vessel. It is needed to mitigate a long-term Complete Loss of Flow Accident (CLOFA) in which core decay heat produces steam and causes a pressure increase in the vessel sufficient to result in coolant-inventory depletion out of the pressure relief valves. Venting of the vessel under such conditions is needed to lower the pressure to less than the supply pressure of the EFIS in order to inject EFIS coolant into the ATR vessel to keep the reactor core covered. The VVS can also prevent PCS over temperature for a Complete Loss of Heat Sink (CLOHS) accident.

The key components in the VVS are two vessel vent valves, located on parallel lines connected to the reactor vessel upper drain line. They are activated by manual switches.

Two vent valve activation systems are used, each associated with its own vent valve. Separation and redundancy in the system design ensure that at least one vent valve will function.

Each vent valve has two limit switches to provide information about the valve plug's position to the Reactor Data Acquisition System (RDAS), annunciators, and lights on the activation switches.

Each vent valve has one manual activation switch in the reactor control room and in Room 121. The reactor control room switches for the two valves are coupled with a connecting bar so that when one switch in each pair is pushed up or down, the other switch in the pair moves the same way. Once opened, the valves remain open until the activation switches are moved to the closed position. Room 121 has one push button to open both valves and one push button to close both valves.

Each valve activation switch has one pair of indicator lights. One light in each pair shows when the associated valve is fully seated, and the other light shows when that valve is fully open.

The VVS has one set of annunciators in the reactor control room (EG&G Idaho 1988, Section 2).

See Figure 6.6-1 in Chapter 6 (Engineered Safety Features).

The VVS valves are held closed against system pressure by a stiff spring in the actuator. When the valves are activated, instrument air is ported to the underside of the actuator piston causing the valves to open. The instrument air [Chapter 9 (Auxiliary Systems)] is backed up by bottled nitrogen gas.

7.3.4.1 Design-Basis Information, Vessel Vent System

7.3.4.1.1 Applicable Codes and Standards—The VVS was designed and built to the following standards and complies with applicable portions of the following standards. The version of each standard most current as of January 1, 1987 was used for the instrumentation NE (RDT) Standards:

C 1-1T	Instrumentation and Control Equipment Grounding and Shielding Practices
C 16-1T	Supplementary Criteria and Requirements for RDT Reactor Plant Protective Systems
F 2-9T	Reliability Assurance
F 4-20T	Operation and Maintenance Manuals
F 7-2T	Packaging, Packing, and Marking of Components for Shipment and Storage
F 7-3T	Marking of Components and Parts

Other Codes and Standards:

NRC Regulatory Guides (To the extent they augment the requirements of SDD 7.7.1, ATR Emergency Firewater Injection System, and applicable NE standards).

10 CFR Part 50, Appendix B	Quality Assurance Criteria for Nuclear Power Plants and Fuel Reprocessing Plants

Department of Defense

MIL-HDBK-217	Reliability Prediction of Electronic Equipment

Department of Energy (Idaho Operations Office)

Operational Safety Standards, ID Appendix 0550	Standard Operational Safety Requirements
ID-12044	Operational Safety Design Criteria Manual

National Fire Protection Association (NFPA)

NFPA 70	National Electrical Code

Institute of Electrical and Electronic Engineers

IEEE 603	Criteria for Safety Systems for Nuclear Power Generating Stations

American National Standards Institute (ANSI)

ANSI/ASME NQA-1	Quality Assurance Program Requirements for Nuclear Facilities

The Contractor

STD-7027	Electrical and Electronic Fabrication (Installation only)
STD-7022A	Cleanliness Acceptance Levels for Nuclear and Nonnuclear Service Components

7.3.4.1.2 Mode of Operation and Plant Operating Conditions—The design-basis events are a Complete Loss of Flow Accident (CLOFA) and a Complete Loss of Heat Sink (CLOHS). Vessel Vent System (VVS) actuation may be needed if a CLOFA occurs in which core decay heat produces steam and causes a pressure increase sufficient to result in coolant inventory depletion out through the pressure relief valves. Vessel venting is needed to lower the pressure to below the supply pressure of the Emergency Firewater Injection System (EFIS), such that EFIS coolant can be injected into the vessel to keep the reactor core covered.

7.3.4.1.3 Safety Functions and Corresponding Protective Actions—The safety function is firewater injection into the vessel. The corresponding protective action is to vent the excess pressure buildup through the VVS.

7.3.4.1.4 Operating Bypass Permissive Conditions—The VVS is not bypassed.

7.3.4.1.5 Manual Control—The calculated response time available to actuate the VVS could be as soon as 1 hour (Pafford 1994).

The vessel vent valves are manually actuated by the operator to quickly and effectively depressurize the PCS in anticipation of the addition of firewater. Audible and visual alarms on RCR P-11 annunciator panel alert operators of the vent valve position (VENT VALVE NOT SEATED) and low instrument air or nitrogen supplied to the vent valve actuators (VESSEL VENT SYSTEM ABNORMAL).

7.3.4.1.6 Range of Transient and Steady-State Conditions—The VVS is a manually activated system. The calculated response time available to actuate the VVS could be as soon as 1 hour (Pafford 1994).

Conditions in which the VVS should be activated are discussed in Chapter 15 (Accident Analyses).

Environmental specification ranges for the VVS are listed in Table 7.3-8.

The VVS uses a Plant Protective System (PPS) 32-volt system. This power comes from two of four independent 32-volt battery-backed sources, and each channel is powered from a different source.

7.3.4.1.7 Abnormal Events—These events are similar to the Reactor Shutdown System (RSS). See Section 7.2.1.3.3.3.

7.3.4.1.8 Tables—Table 7.3-8 lists the ATR environmental specification ranges for the VVS.

7.3.4.2 Vessel Vent System Analysis. Three reliability analyses have been performed on the VVS: a failure mode and effects analysis (FMEA), a single failure analysis (SFA), and a probabilistic risk assessment (PRA). See Chapter 6 (Engineered Safety Features) for additional information. Also see Engineering Design File No. PRPTS-ATR-234 dated January 20, 1988 (Golden 1988) and the Advanced Test Reactor Probabilistic Risk Assessment, EGG-PRP-8823, Revision 1, dated September 1991 (Eide, Khericha, and Thatcher 1991).

7.3.4.2.1 Evaluation of Compliance to Applicable Codes and Standards—The VVS meets the intent of GDC and IEEE 603-1980 as indicated below.

7.3.4.2.1.1 Single Failure Criterion—The VVS has two complete, independent vent valve activation systems, each associated with its own vent valve.

The VVS meets the intent of ATR GDC Nos. 21 and 22 (EG&G Idaho 1988, Section 5).

7.3.4.2.1.2 Completion of Protective Action—The VVS is a manual system in which, when opened, the valves remain open until the activation switches are moved to the closed position.

7.3.4.2.1.3 System Integrity—The VVS is designed to perform its protective function over the full range of environmental conditions specified in Table 7.3-8, and over the full range of power supply variations.

7.3.4.2.1.4 Independence—Channels are independent of, and physically separated from, each other. A failure in one system will not affect the other. Each valve has separate compressed nitrogen gas bottles as a backup to the instrument air system.

7.3.4.2.1.5 Test and Calibration—The VVS is designed to allow for channel maintenance while the reactor is operating. Valve position limit switches need adjustment periodically, and the pressure switches on the instrument air/nitrogen gas supply pressures require adjustment or verification.

7.3.4.2.1.6 Identification—ATR has a program in place for labeling equipment and wiring in the *Operations* manual.

7.3.5 LOCA Primary Coolant Pump (PCP) Shutoff System

7.3.5.1 System Description. The LOCA Primary Coolant Pump (PCP) Shutoff System has been designed to trip primary coolant pumps following a loss-of-coolant-accident (LOCA). The LOCA ESF feature is designed to shutoff all running primary coolant pumps on low primary coolant pressure; however, failure of one pump to trip has been analyzed and is tolerated.

The actuation system for the LOCA PCP Shutoff System has components in common with the RSS Vessel Inlet and Outlet Pressure Subsystems. The actuation system utilizes low pressure trip signals from the channel comparators of these subsystems to actuate ESF 2:3 Logic Modules. The inlet pressure and outlet pressure subsystem each have two 2:3 logic devices, LOCA ESF-1 located in PPS Room A and LOCA ESF-4 located in PPS Room D.

When a low pressure condition from either the RSS Vessel Inlet Pressure or Outlet Pressure Subsystem satisfies the 2:3 logic requirements, signals are sent from the ESF 2:3 logic modules to the actuation logic circuits. There are four actuation logic circuits, one for each primary cooling pump. Each actuation logic circuit consists of a time delay relay circuit and relays configured in a 2:4 relay logic, bypass switches, reset switches, pump test switches, and indicators. When two time delay circuits have tripped, the 2:4 relay circuit provides the final actuation of tripping the primary pump breaker.

The actuation system can be bypassed using bypass switches located on panel TMR-LOCA-ESF-1 located in the PPS Room A, on panel TMR-LOCA-ESF-4 located in PPS Room D, and on Panel P11 located in the reactor control room. The status of the LOCA PCP Shutoff System is monitored by the process DCS and indicator lights on panels in the PPS rooms and on Panel P11 in the reactor control room.

Surveillance testing and maintenance of these circuits along with those performed on the primary pump breakers ensure high probability that the LOCA ESF performance will be achieved.

The following describe the common equipment.

- Transmitters—There are three pressure transmitters for the RSS Vessel Inlet Pressure Subsystem and three pressure transmitters for the RSS Vessel Outlet Pressure Subsystem. The pressure transmitter outputs are sent to their respective channel comparators. Refer to Figures 7.2-1, 7.2-3, and 7.2-4.

- Analog Comparators—Each channel of the RSS Vessel Inlet Pressure Subsystem and the RSS Vessel Outlet Pressure Subsystem has a high and low comparator. The comparators for the RSS Vessel Inlet Pressure Subsystem have an adjustable trip point for the actuation of a reactor trip and an ESF output circuit. The high comparator ESF function is described in Section 7.3.1. For the RSS Vessel Outlet Pressure Subsystem, the high comparator only has the adjustable trip point for the actuation of a reactor trip, while the low comparator has the adjustable trip point for the actuation of a reactor trip and an ESF output circuit. The reactor trip actuations for the two subsystems are described in Section 7.2.

7.3.5.1.1 Two-Out-of-Three (2:3) Logic Module—There are four 2:3 Logic Modules. Two of the 2:3 Logic Modules receive signals from the Channel A, B, and C Vessel Inlet Pressure Subsystem and two 2:3 Logic Modules receive signals from the Channel A, B, and C Vessel Outlet Pressure Subsystem. Two logic modules are located in PPS Room A and two are located in PPS Room D. The 2:3 Logic Modules give a trip output when two of the three subsystem comparator signals are in a tripped condition. A trip condition from a 2:3 Logic Module will cause the actuation of a time delay circuit. There are four time delay circuits in the Actuation Subsystem.

7.3.5.1.2 Time Delay Relay Circuit—Each of the four time delay relay circuits is comprised of three relays. Two circuits are associated with the 2:3 logic modules for the inlet pressure and two with the outlet pressure. A relay identified as K1 when actuated by the bypass switches will bypass the time delay of the circuit and provide an alarm to the process DCS indicating that the circuit is in the bypassed condition. Another relay identified as K2 is used to trip the time delay relay and cause a light to be lit indicating that the time delay relay has been actuated. The time delay relay identified as either TRM-IN or TRM-OUT is used to trip the two-out-of-four (2:4) pump trip relay circuitry, causes a light to be lit and provides an alarm to the DCS indicating that the output of the time delay relay has tripped. Each of the time delay relay circuits actuates two relays in each of the four two-out-of-four (2:4) pump trip relay circuitry. Two time delay relay circuits are located in a panel enclosure located in PPS Room A and two time delay relay circuits are located in a panel enclosure located in PPS Room D.

7.3.5.1.3 Two-Out-of-Four (2:4) Pump Trip Relay Circuitry—There are four 2:4 pump trip relay circuits, one for each of the primary coolant pumps 670-M-6, 670-M-7, 670-M-8, and 670-M-9. Each 2:4 pump trip relay circuit is comprised of eight relays configured in a two-out-of-four actuation design. When two time delay circuits have tripped then the 2:4 relay circuit provides the final actuation of tripping the primary pump breaker. Each 2:4 pump trip relay circuit is housed in an enclosure. Two enclosures, Primary Pump 670-M-6 and 670-M-7, are located in PPS Room A and the two enclosures, Primary Pump 670-M-8 and 670-M-9, are located in PPS Room D.

7.3.5.1.4 Bypass Switches—There are eight bypass switches, four located in the reactor control room on Panel P11 and two located on each of the time delay relay circuit enclosures located in PPS Rooms A and D.

7.3.5.1.5 Reset Switches—There are eight reset switches, four located in the reactor control room on Panel P11 and two located on each of the time delay relay circuit enclosures located in PPS Rooms A and D.

7.3.5.1.6 Test Switches—There are four test switches, one located on each of the 2:4 Pump Trip Relay Circuit enclosures. These switches are used when testing is to be performed on the LOCA ESF.

7.3.5.1.7 Indicators—Indicator lights are used to indicate the status of the ESF Actuation Subsystem. Lights located on the time delay relay circuit enclosures indicate the "Normal", "Bypassed", "Tripped", and "Timer Activated" status of each time delay relay circuit. A light located on each of the 2:4 pump trip relay circuit enclosures indicates when testing for the pump is being performed. The bypass and reset switches located in the reactor control room on Panel P11 indicate when the bypass is active and when the reset action can be performed.

7.3.5.1.8 Distributed Control System (DCS)—The process DCS provides Priority 1 and 4 alarms on the display in the reactor control room. There are eight Priority 1 alarms and four Priority 4 alarms. The Priority 1 alarms consist of four alarms indicating when the LOCA ESF has been placed in bypass and four alarms—one for each pump—indicating when the pump trip circuit has been placed in the test position. The Priority 4 alarms consist of four alarms indicating when each time delay relay circuit has tripped.

7.3.5.1.9 Power—The 2:3 logic modules utilize the 12 volt dc power of the L31A and L31D cabinets in PPS Rooms A and D. The time delay relay circuits, 2:4 pump trip relay circuits, and indication lights use the 32 volt dc power from the 32 volt dc distribution in PPS Rooms A and D.

7.3.5.2 Design-Basis Information, LOCA Primary Coolant Pump (PCP) Shutoff System. Unreviewed Safety Question (USQ) evaluation SE-1998-059 identified a late-heatup phenomenon during design-basis LOCAs that was not addressed in the safety analysis. Cooling in the fuel element hot channel was not adequate for the predicted combination of low pressure relatively high decay heat and low flow (flow was reduced to one emergency coolant pump) in the analysis. A major part of the resolution of this USQ resolution required demonstrating that the PCPs would continue to provide flow when PCP net positive suction head (NPSH) fell below 50 ft and to model that degraded flow with the PCP in cavitation. Some PCP flow was required to prevent the late heatup after initiation of design-basis LOCA. The previously approved UFSAR analysis assumed the PCP flow output dropped to zero when NPSH dropped below 50 ft. When the PCP cavitation model was applied to the design-basis LOCA analysis low primary coolant system pressures allowed the air volume in the surge tank to expand into the PCS piping. This resulted in a concern for potential degradation of flow from the operating emergency pump.

In order to prevent air from entering the PCS piping, the low-pressure actuation setpoint for the emergency firewater injection system (EFIS) was raised, a tighter control band on surge tank level was established, and a new ESF was installed to trip the PCPs nominally 65 seconds after actuation of one of the PPS low reactor-vessel pressure subsystems.

7.3.5.2.1 Applicable Codes and Standards

NE Standard

The LOCA ESF was designed and complies with the applicable portions of the following NE (U.S. Department of Energy Nuclear Energy (NE) Programs, formerly RDT standard) standard:

C 16-1T Supplementary Criteria and Requirements for RDT Reactor Plant Protective Systems, December 1969

Other Codes and Standards

The Contractor's Standard (Installation only)

EG&G-STD-7027 Electrical and Electronic Fabrication

American National Standards Institute (ANSI/National Fire Protection Association (NFPA)

ANSI/NFPA 70 National Electrical Code

7.3.5.2.2 General Design Criteria—The following list is the set of ATR General Design Criteria (GDC) that were considered in the design and installation of the LOCA ESF.

- GDC 1, Quality Standards and Records
- GDC 2, Design Basis for Protection Against Natural Phenomena
- GDC 3, Fire Protection
- GDC 4, Environmental and Dynamic Effects Design Basis
- GDC 10, Reactor Design
- GDC 13, Instrumentation and Control
- GDC 15, Reactor Coolant System Design
- GDC 19, Control Room
- GDC 20, Protection System Functions
- GDC 21, Protection System Reliability and Testability
- GDC 22, Protection System Independence
- GDC 23, Protection System Failure Modes
- GDC 24, Separation of Protection and Control System
- GDC 29, Protection Against Anticipated Operational Occurrences.

7.3.5.2.3 Tables—The LOCA PCP Shutoff System performance requirements are shown in Table 7.3-9. The environmental specifications are shown in Table 7.3-10.

7.3.5.2.4 Block Diagrams—The LOCA Primary Coolant Pump (PCP) Shutoff System block diagram is shown in Figure 7.3.7.

7.3.5.3 LOCA Primary Coolant Pump Shutoff System Analysis. The reliability and safety elements of the design of the ESF for LOCA mitigation were evaluated. The evaluation included a FEMA, fault tree analysis including human error, an evaluation of single point failures, an evaluation of internal and external events including load drop, internal fires and internal flooding, and an evaluation of the adverse effects of the LOCA ESF such as spurious actuation. The fault tree analysis demonstrated that the LOCA ESF design achieves the system reliability needed, with a system failure probability less than 4.0E-4/demand (Thatcher, 1999).

7.3.5.3.1 Evaluation of Compliance to Applicable Codes and Standards—The LOCA Primary Coolant Pump Shutoff System design meets the intent of GDC and codes and standards identified in Sections 7.3.5.2.1 and 7.3.5.2.2 as indicated in the following subsections with the stated exceptions:

7.3.5.3.1.1 Quality Assurance—The LOCA Primary Coolant Pump Shutoff System is identified by the Quality program in place as Quality Level 1 and the design, and installation has been performed in accordance with the Quality program. The design meets the intent of GDC 1 and applicable portions of RDT 16-1T Sections 4.4 and 5 with the exception that no additional RDT Standard requirements are invoked.

7.3.5.3.1.2 Essential Performance Requirements—The LOCA Primary Coolant Pump Shutoff System design meets the criteria listed in Tables 7.3-9 and 7.3-10. Newly designed electronic and relay components of the system have been seismically tested for compliance to the seismic criteria. Seismic analysis was performed to qualify the new cabinet anchors. Components were selected that would operate within the normal environmental requirements. The design meets the intent of GDC 2, 4, 10, 13, 15, and 20 and applicable portions of RDT 16-1T Sections 3.3, 4.1.1, and 4.5. Seismic testing (Richins et al. 1999) and analyses have been performed (Thatcher, 1999; Gorman, 1999).

7.3.5.3.1.3 Defense Against Failures—The LOCA Primary Coolant Pump Shutoff System is designed to achieve high system reliability, system availability and a low probability of spurious primary coolant pump trips. The system utilizes two RSS subsystems, 2:3 logic and a final 2:4 pump trip circuitry. Possible system failures have been evaluated and the design has utilized channel independence, redundancy, and physical separation where possible. Equipment is located in the separate PPS Rooms that have fire protection equipment as do other areas of the plant. Single failure points identified in the analysis were found to be acceptable (Thatcher, 1999). The design meets the intent of GDC 3, 21, 22, 23, 24, and 29 and applicable portions of RDT 16-1T Sections 4.2 and 4.3.

Table 7.3-1. Primary pumps shutoff with high vessel-differential-pressure condition.[a]

Two-pump operation

Pumps running	Pump breakers that open upon trip
6, 7	6
6, 8	6, 8
6, 9	6
7, 8	8
7, 9	None
8, 9	8

Three-pump operation

Pumps running	Pump breakers that open upon trip
6, 7, 8	6, 8
6, 7, 9	6, 9
6, 8, 9	6, 8
7, 8, 9	7, 8

a. EG&G Idaho, ATR PPS Engineered Safety Feature Schematic Diagram, Drawing No. 128500, current issue.

Table 7.3-2. Emergency Firewater Injection Actuation Subsystem performance requirements.[a]

Performance criteria	Requirements
Type of setpoint	low
Minimum channel response time	1 sec
Minimum setpoint accuracy (level)	± 0.5 ft
Minimum setpoint accuracy (pressure)	± 1.16 psia
Normal or nominal value of measured variable (level)	Vessel is full during pressurized operation; operation level is 100 ft of elevation during depressurized operation.
Normal or nominal value of measured variable (pressure)	Vessel is at 370 psig during pressurized operation; operating pressure is 12.2 psia during depressurized operation.
Minimum pressure rating of sensor (nondamaging)	0 - 1,000 psi
Analog bandwidth	10 Hz
Analog accuracy	1%
Resolution	0.5%

a. INEEL 2003.

Table 7.3-3. ATR environmental specifications for the Emergency Firewater Injection System.[a]

Areas	Temperature	Humidity	Pressure	Radiation	Vibration
Normal					
Reactor areas	64° to 200°F	0–100%	1,000 psi	Flux 4.0×10^{14} nv @ 250 MW Balanced PWR	0-0.5 g and 2.54 μm (0 to 0.1 mil)
Inaccessible areas	75° to 104°F	0–90%	Atmo. at 5,000 ft	0–2.5 R/hr	0-0.05 g and 2.5 μm
Accessible areas	64° to 104°F	0–90%	Atmo. at 5,000 ft	0–10 mR/hr	0-0.05 g and 2.5 μm
Abnormal					
Reactor areas	59° to 250°F	0–100%	1,250 psi	Flux 4.0×10^{14} nv @ 250 MW	b
Inaccessible areas	41° to 140°F	0–100%	10–15 psi	0–50 R/hr	b
Accessible areas	41° to 126°F	0–100%	0–15 psi	0–20 mR/hr	b
Storage	-2° to 126°F	0–99%	Atmo. at 5,000 ft	0–1 R/hr	c

a. INEEL 2003.

b. No abnormal vibration conditions which would cause values in excess of the normal ranges have been identified.

c. No measurements are available for storage areas, but values are not expected to exceed the specified normal range.

Table 7.3-4. ATR Emergency Firewater Injection Actuation Subsystem protective functions.[a]

Criterion	Function
1. Protective function	Monitor the reactor vessel pressure and water level, and actuate the opening of the firewater valves causing firewater addition
2. Incident requiring action	Loss-of-coolant accident
3. Monitored variable	Reactor vessel pressure and water level
4. Protective action	Firewater level control valve actuation
5. Typical response time for protective action	45 s[b]
6. Critical reactor variable	Reactor vessel coolant level

a. INEEL 2003, Table 1.
b. Response time from initiation of sensor signal to full opening of injection valves.

Table 7.3-5. List of protective functions for the Containment Isolation Subsystem stack exhaust radiation monitors.[a]

Criterion	Critical event or protective action
1. Protective function	Mitigate the consequence of credible accidents capable of releasing airborne radioactive contamination.
2. Incident requiring action	Release of unacceptably high airborne contamination within the confinement boundary
3. Monitored variable	Airborne radioactive contamination in the building air exhaust
4. Protective action	Shut off supply, exhaust, and ventilation fans and close containment dampers in the confinement portion of the reactor building boundary
5. Critical reactor variable	Airborne radioactive contamination above limiting safety system setting levels in the exhaust air from the confinement area of the ATR Reactor Building

a. EG&G Idaho 1986, Table A.

Table 7.3-6. ATR Subsystem performance requirements for the Containment Isolation Subsystem stack exhaust radiation monitors.[a]

Criterion	Performance requirement
Type of setpoint	High
Channel response time	1 second
Logic response time	1 second
Setpoint accuracy	± 10% of setpoint
Normal or nominal full-power value of measured variable N	2.5 mR/hr
Range (Operating)	0 to 50 R/hr
Indication interval spans	0 to 500 mR/hr 500 mR/hr to 1.58 R/hr 1.58 R/hr to 5 R/hr 5 R/hr to 15.8 R/hr 15.8 R/hr to 50 R/hr
Analog bandwidth	10 Hz
Analog accuracy	±20% of indicated value

a. EG&G Idaho 1986, Table C.

Table 7.3-7. ATR environmental specification ranges for the Radiation Monitoring and Seal System (RMSS).[a]

Areas	Temperature	Humidity	Pressure	Radiation	Vibration
Normal					
Inaccessible areas (Stack Room)	24°C to 40°C 79°F to 104°F	0-90%	Atmospheric @ 5,000 ft	0 to 0.645 mC/kg-h 0 to 2.5 R/h	0 to 0.5G and 2.54 µm 0 to 0.1 mil
Accessible areas	18°C to 40°C 64°F to 104°F	0-90%	Atmospheric @ 5,000 ft	0 to 2.58 µC/kg-h 0 to 10 mR/h	0 to 0.5G and 2.54 µm 0 to 0.1 mil
Outside areas	-18°C to 40°C 0°F to 104°F	0-90%	Atmospheric @ 5,000 ft	0 to 0.258 µC/kg-h 0 to 1 mR/h	
Abnormal					
Inaccessible areas (Stack Room)	5°C to 60°C 41°F to 140°F	0-90%	126 to 179 kPa absolute 10 to 15 psia	0 to 6.45 mC/kg-h 0 to 15 R/h	b
Accessible areas	5°C to 60°C 41°F to 140°F	0-99%	126 to 179 kPa absolute 10 to 15 psia	0 to 5.6 µC/kg-h 0 to 20 mR/h	c
Outside areas	-34°C to 52°C -29°F to 126°F	0-99%	Atmospheric @ 5,000 ft	0 to 0.258 µC/kg-h 0 to 1 mR/h	b
Storage	-34°C to 52°C	0-99%	Atmospheric @ 5,000 ft.	0 to 0.258 µC/kg-h	b

a. EG&G Idaho 1986, Table D.

b. No measurements are available for this area, but values are not expected to exceed the specified normal range.

c. No abnormal vibration conditions that would cause values in excess of the normal ranges have been identified.

Table 7.3-8. ATR environmental specification ranges for the Vessel Vent System.[a]

Conditions	Temperature	Humidity	Pressure	Radiation
Normal conditions				
Inaccessible areas	75°F to 104°F	0-90%	12.3 psia	0-2.5 R/h
Accessible areas	64°F to 104°F	0-90%	12.3 psia	0-10 mR/h
Abnormal conditions				
Inaccessible areas	41°F to 300°F	0-100%	12.6 psia	0-50 R/h
Accessible areas	41°F to 300°F	0-90%	12.6 psia	0-20 mR/h
Storage conditions	-29°F to 126°F	0-99%	12.3 psia	0-1 mR/h

a. EG&G Idaho 1988, Table 1.

Table 7.3-9. ATR LOCA Primary Pump Shutoff System Protective Functions.

	Criterion	Function
1.	Protective function	Monitor the reactor vessel inlet and outlet pressure and actuate the shutoff of the primary coolant pumps upon low reactor vessel pressure
2.	Incident requiring action	Loss-of-coolant accident
3.	Monitored variable	Reactor vessel inlet and outlet pressure
4.	Protective action	Primary Coolant Pump shutoff actuation
5.	Typical response time for protective action	65 s[a]
6.	Critical reactor variable	Reactor vessel coolant pressure

a. Response time from initiation of sensor signal to opening of primary coolant pump breaker.

Table 7.3-10. ATR LOCA Primary Pump Shutoff System Environmental Specifications.[a]

System/areas	Temperature	Humidity	Pressure	Radiation	Vibration
Normal					
Inaccessible areas[b]	75° to 105°F	0–90	Atmo. at 5,000 ft	0–50 R/hr	0–0.05 g and 0-0.1 mil
Accessible areas[b]	70° to 105°F	0–90	Atmo. at 5,000 ft	0–10 mR/hr	0–0.05 g and 0-0.1 mil
Abnormal					
Inaccessible areas[b]	40° to 140°F	0–100[c]	10–15 psig	0–500 R/hr	d
Accessible areas[b]	40° to 125°F	0–95	10–15 psig	0–20 mR/hr	d

a. For abnormal pressure and temperature conditions, the equipment shall be capable of operating in the abnormal range for one hour (INEEL 2000, Section 1.2.2.)

b. Inaccessible areas are those for which personnel access is prohibited during full-power reactor operation with the exception of the storage canal.

c. The 100% humidity is noncondensing.

d. No abnormal vibration conditions that would cause values in excess of the normal ranges have been identified.

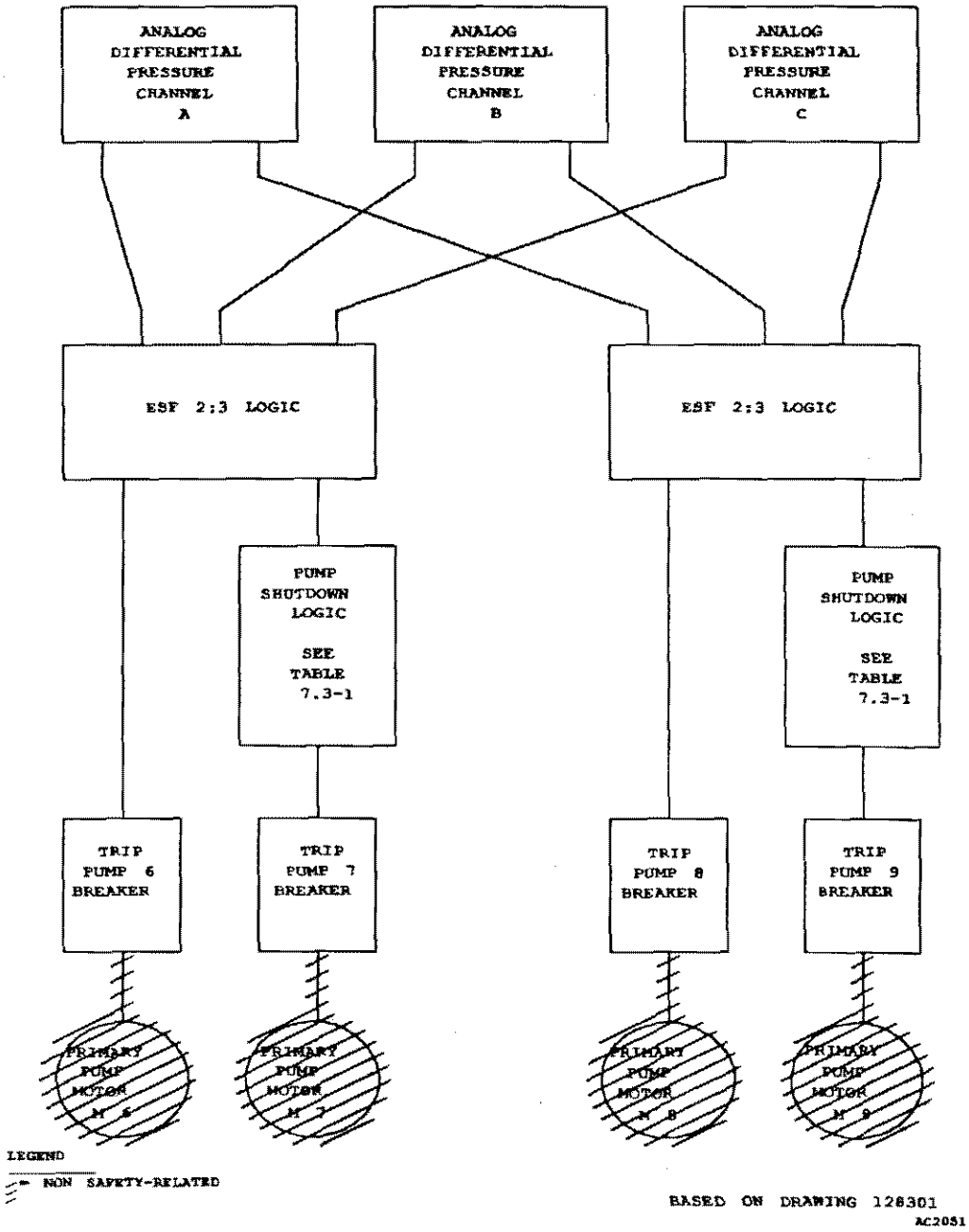

Figure 7.3-1. Primary Pump Shutoff System. **(For Information Only)**

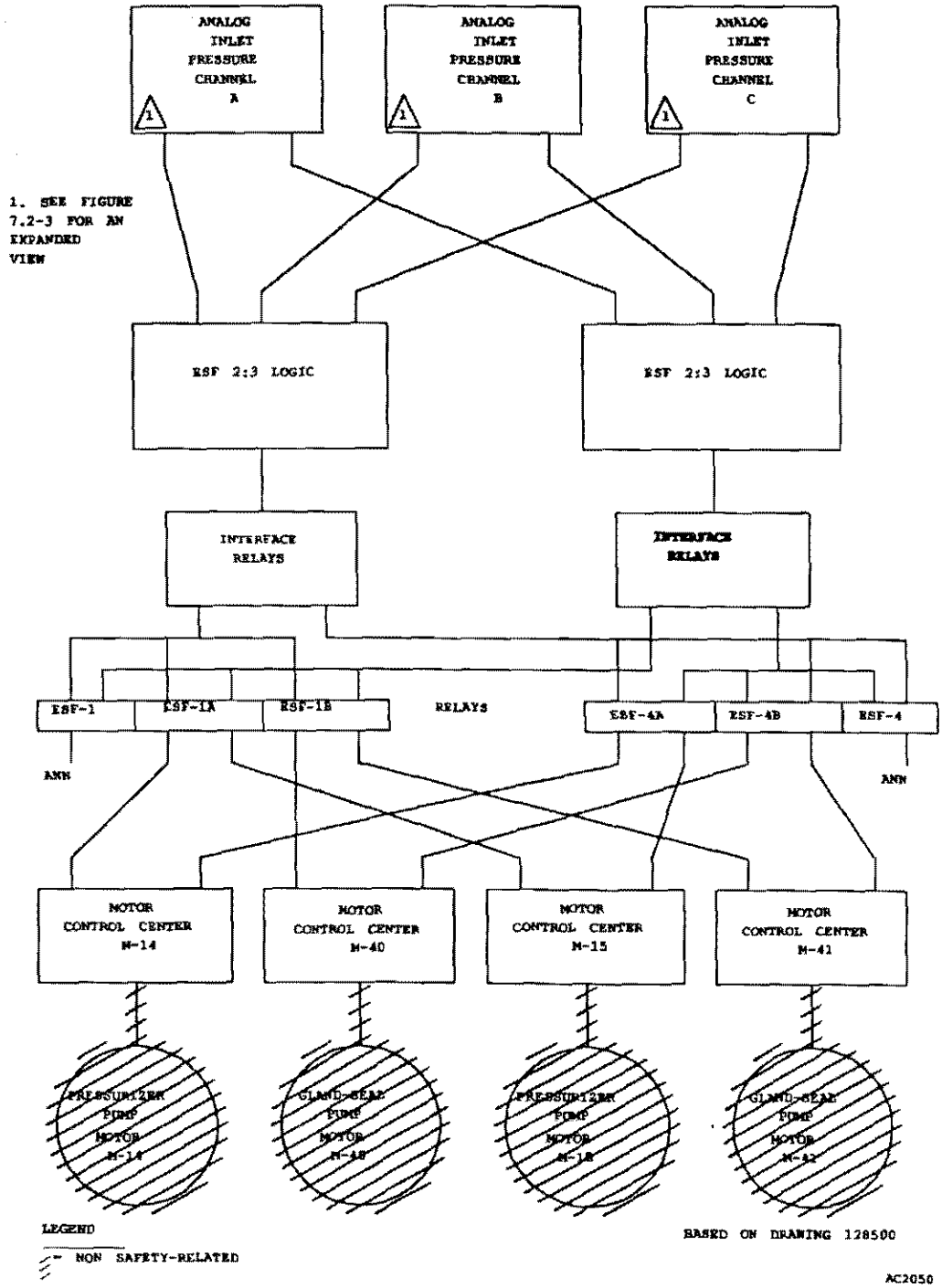

Figure 7.3-2. Pressurizing and Gland Seal Pumps Shutoff System. **(For Information Only)**

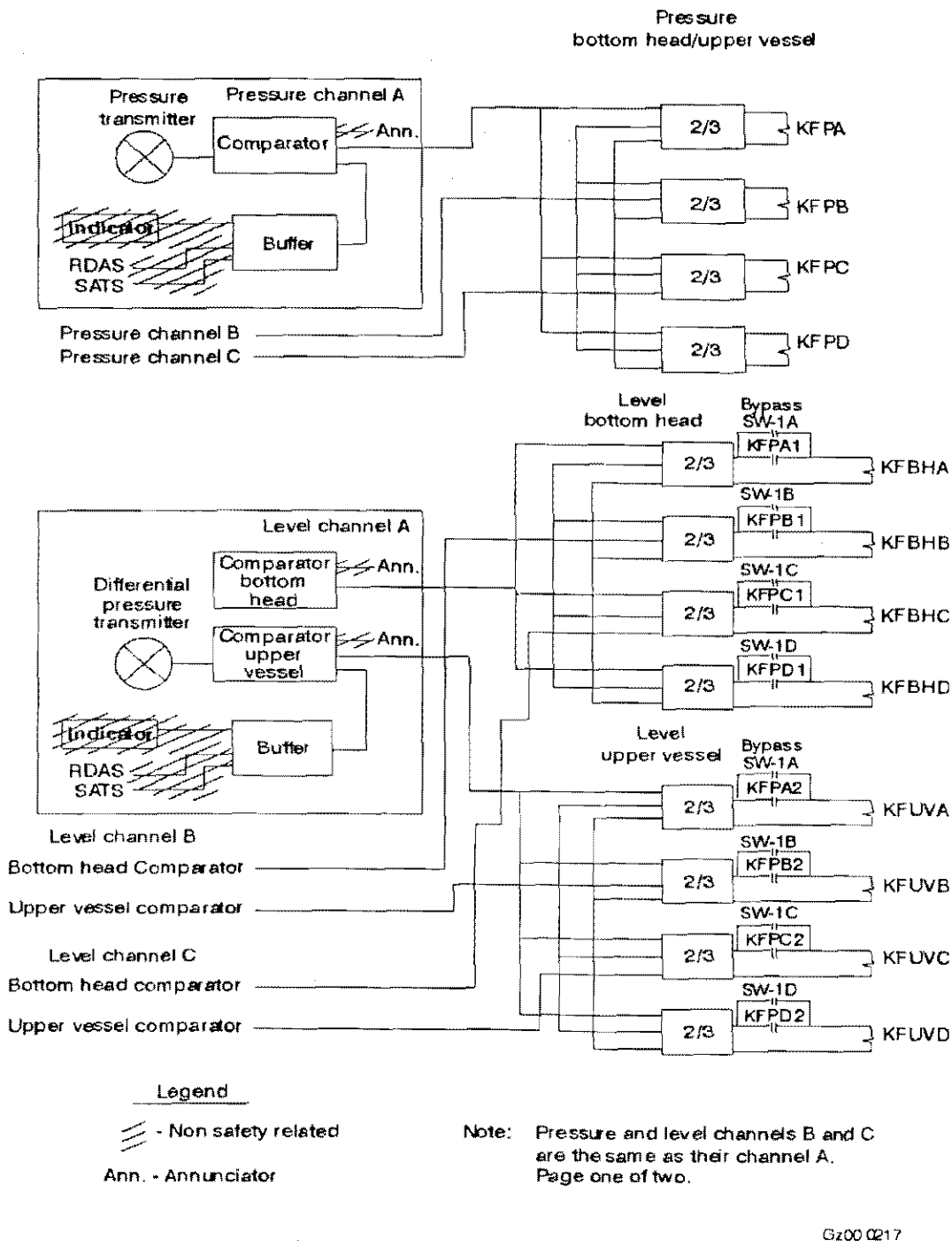

Figure 7.3-3. Emergency Firewater Injection System detector and logic diagram.
(For Information Only)

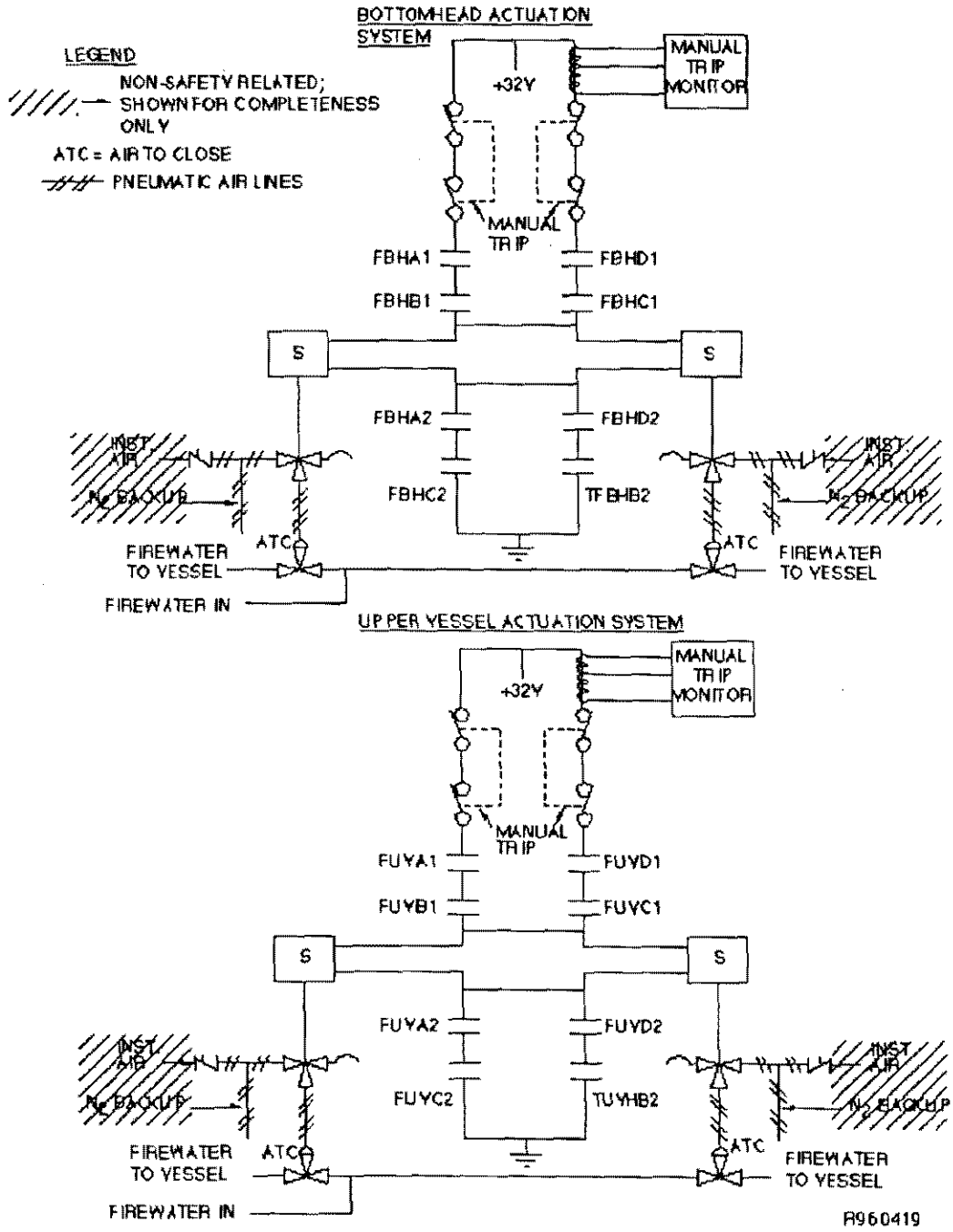

Figure 7.3-4. Emergency Firewater Injection System Actuation Subsystem logic diagram. **(For Information Only)**

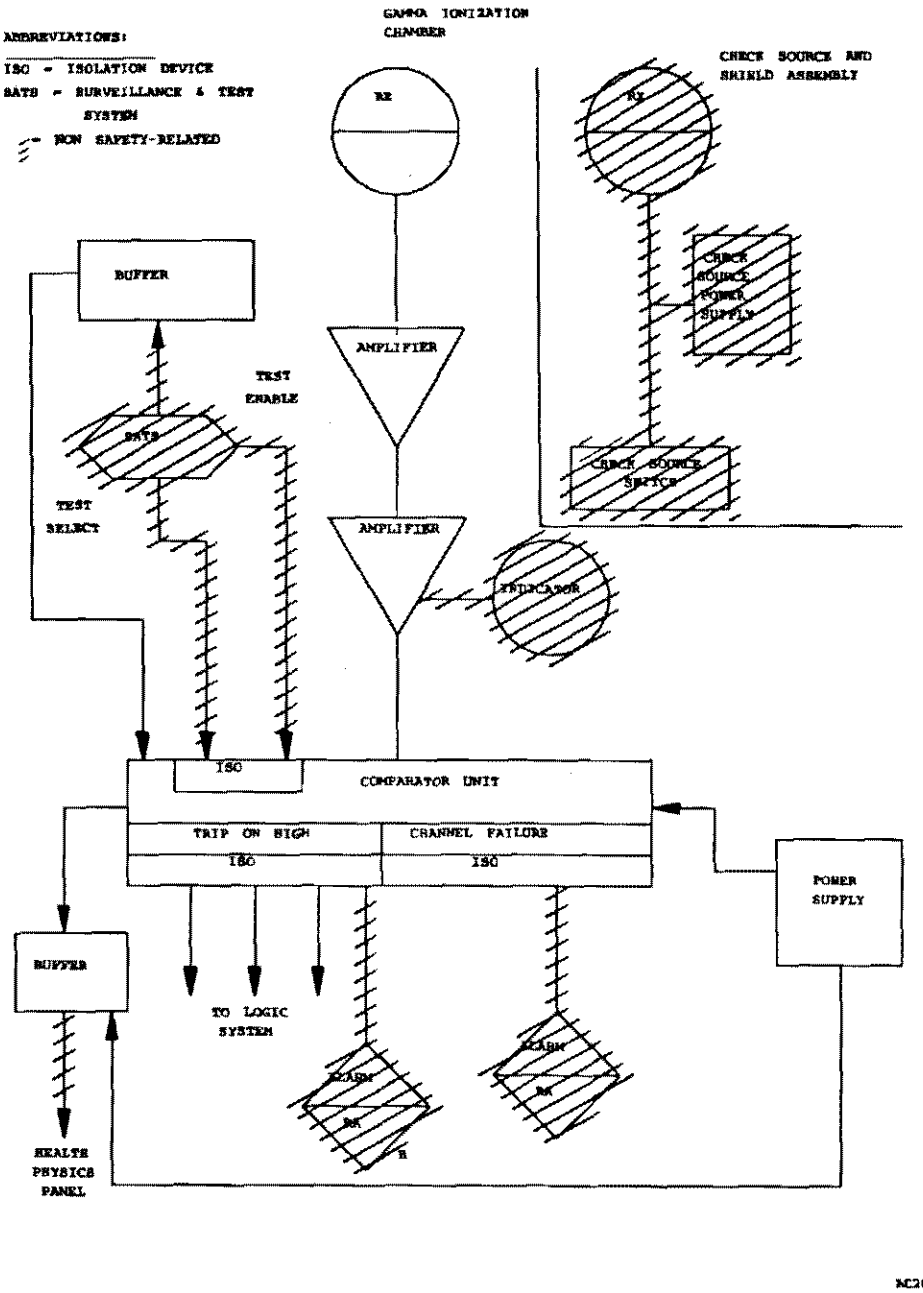

Figure 7.3-5. Radiation Monitoring and Seal System diagram, Part 1. **(For Information Only)**

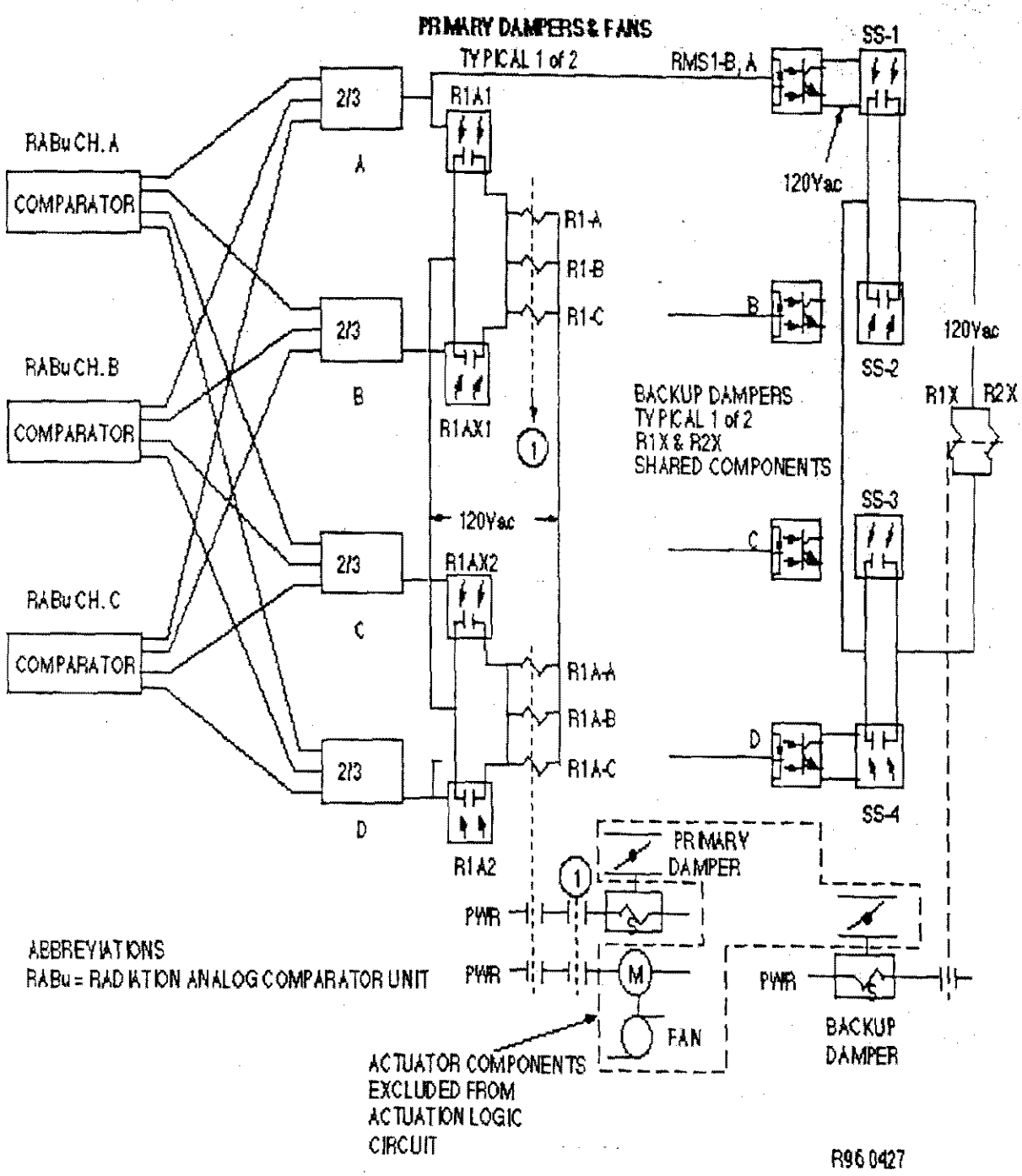

Figure 7.3-6. Radiation Monitoring and Seal System diagram, Part 2. **(For Information Only)**

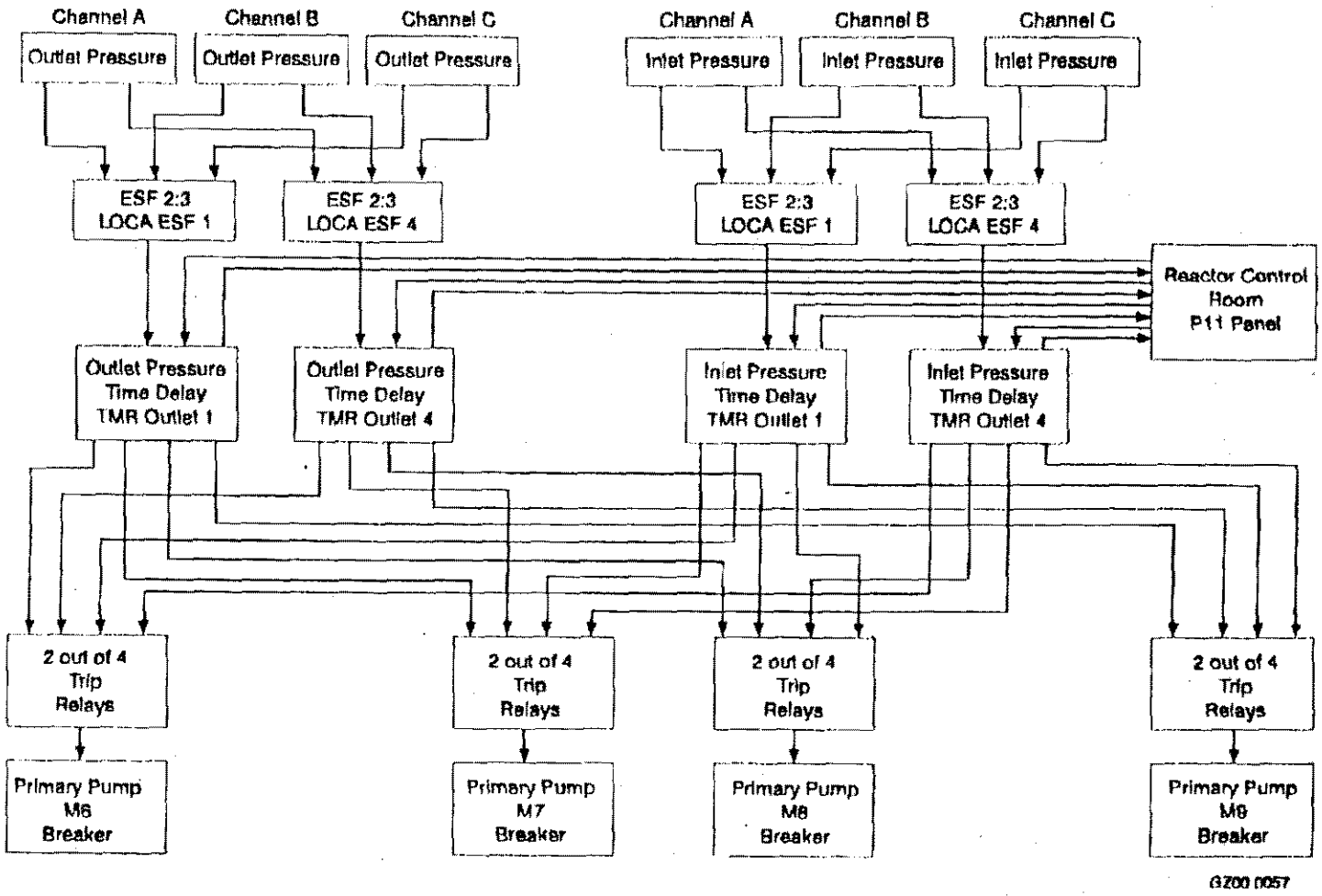

Figure 7.3-7. LOCA Primary Coolant Pump (PCP) Shutoff System. **(For Information Only)**

7.4 Systems Required For Safe Shutdown

Automatic functions necessary for a safe shutdown are included in the Plant Protective System (PPS). The PPS releases the safety rods and limits Primary Coolant System (PCS) pressure and temperature within limits for normal operation and anticipated transients. The PPS also provides activation for the Emergency Firewater Injection System (EFIS), which is a backup system used to flood the core or provide emergency cooling. Depressurization by the Vessel Vent System (VVS) may also be required for emergency cooling. The outer shim control cylinders (OSCCs), which are not included in the PPS, but are safety related, serve as a manually actuated backup for reactor shutdown if the safety rods fail to insert.

Emergency coolant flow is required to be available during reactor operation greater than 3 MW and for the first 30 minutes after reactor shutdown. Upon loss of the Primary Coolant Pumps (PCPs), 30 minutes of decay heat removal will be provided by emergency coolant pumps 670-M-10 and 670-M-11. These two pumps are required for safe shutdown and are designated safety-related. During normal reactor operation, one emergency pump is continually running, and the other emergency coolant pump will automatically start upon low emergency coolant recirculating flow. Both emergency coolant pumps will automatically start upon loss of all primary coolant pumps. Emergency coolant pump 670-M-10 is powered by a diesel/commercial power source. Emergency coolant pump 670-M-11, a dc powered pump, receives its power from a battery-backed 250 Vdc power source.

7.4.1 Control of the Outer Shim Control Cylinders

The OSCCs, which are used for core power control, serve as a backup for reactor shutdown if the safety rods fail to insert. Mechanical design and operation of the OSCCs is presented in Chapter 3 (Design of Structures, Components, Equipment, and Systems).

Each OSCC assembly consists of a beryllium cylinder faced with hafnium plates. The control cylinders are supported from the top by worm gear boxes on support beams attached to the top of the core reflector tank.

Continuous position indication for the drive shaft for each pair of cylinders is provided through a gear drive synchro transmitter with a readout on the reactor console in tenths of a degree of cylinder rotation. The position information is digitized at the console display and transmitted serially to the ATR data system.

Mechanical limit switches on each drive shaft are also used for limit indication. The outer limit switch stops shim travel in the withdrawal direction and the inner limit switch stops shim travel in the insert direction. These switches actuate relays that interrupt electrical power to the drive motors.

The OSCCs must be driven to accomplish their safety function. The drive motors receive backup power to insert the shims from the battery-backed power system, and are controlled from the reactor control console.

7.4.1.1 Interlocks. The ATR control system has been designed to prevent accidents in the startup range. Outer shims cannot be withdrawn until safety rods are withdrawn. Outer shim cylinders cannot be continuously withdrawn below 10^{-5} N_F (EG&G Idaho 1994, Section 5.1.4).

7.4.1.2 PPS Scram. In a PPS scram, the loss of the rod clutch coil current is sensed and the timer circuit is energized. After 25 minutes, the timer circuit energizes the relays, and all outer shim cylinders are inserted (EG&G Idaho 1983, Section 2.2.1.2).

7.4.1.3 Design Basis. The control system of the OSCCs is designed to provide reliable control of the OSCCs in the event backup protection is needed. It also provides reliable control of the OSCC during reactor operation.

7.4.1.4 Analysis

7.4.1.4.1 General Functional Requirements—The OSCC system (sixteen beryllium outer shim cylinders and eight drive assemblies) is a backup system for the safety rods. The outer shim cylinders will begin to automatically insert 25 minutes after a reactor scram has occurred, provided they were not previously inserted. If the safety rods fail to insert, the outer shim cylinders can be driven in to provide for a safe shutdown of the reactor. See Chapter 4 (Reactor) for outer shims worth.

Power for the OSCC is normally supplied by the diesel-commercial power bus 670-E-15. OSCC power to insert the shims can also be supplied from either the Instrument or the Utility battery backed power (BBP) system. See Chapter 8 Electric Power.

7.4.1.4.2 Equipment Qualification—ATR Equipment Qualification is addressed in Chapter 3.

7.4.1.4.3 Diversity—The reactor can be shut down by two methods: safety rods and the OSCC.

7.4.1.4.4 Bypasses—The OSCC is not bypassed during reactor operation.

7.4.1.4.5 Maintenance—Routine maintenance is performed during reactor shutdown. No online maintenance is permitted without administrative approval.

7.4.1.4.6 Readout Information—The control room has position indicators and annunciators, and system information is recorded on the Reactor Data Acquisition System (RDAS).

7.4.2 Emergency Backup Manual Scram and Reverse

Two emergency backup scram (EBS) switches are located in Room 101 adjacent the Reactor Control Room. These switches control the ac voltage to the two rod clutch current controller power supplies. In addition, the EBS switches control power to the emergency backup reverse (EBR) relays. A reverse is the simultaneous, motor-driven insertion of all neck shim rods and OSCCs. The design configuration requires that only one EBS switch be actuated to give a scram and a reverse. See Figure 7.4-1.

7.4.2.1 Design Basis Information, EBS. The EBS is designed to scram the reactor from a location outside the confinement area.

7.4.2.2 Analysis

7.4.2.2.1 General Functional Requirements—The EBS was designed to release the safety rods and insert the OSCC from an actuation location outside ATR confinement.

7.4.2.2.2 Single Failure Criterion—The EBS is a simple fail-safe system. A double switch releases power to the power supplies for the Rod Clutch Coil Power Auctioneer Unit, which then causes the unit to release the safety rods. This switch is also backed up by a second switch. (See Figure 7.4-1.) System Integrity—The EBS is designed to perform its protective function over the full range of environmental conditions specified in Table 7.2-2, and over the full range of power supply variations given in Chapter 8 (Electric Power).

7.4.2.2.3 Equipment Qualification—ATR Equipment Qualification is addressed in Chapter 3.

7.4.2.2.4 Bypasses—The EBS is not bypassed.

7.4.2.2.5 Channel Independence—The EBS channels are not independent from each other, nor are there redundant channels.

7.4.2.2.6 Test —Detailed operating and maintenance procedures have been prepared to ensure that the EBS is tested correctly.

7.4.2.2.7 Maintenance—Routine maintenance is performed during reactor shutdown. No online maintenance is permitted without administrative approval.

7.4.2.2.8 Indication of Protective Actions—The indication of protective actions is the same as that for the RSS. See Section 7.2.2.16 for detailed information.

7.4.2.2.9 Information Readout—Annunciators provide the reactor control operators with accurate, complete, and timely information summarizing the status of the PPS. Information indicating that an EBS has been activated is the over/under voltage to the safety rod clutch coils condition on Panel P-11 and the location indicators for the control rods and the OSCCs.

7.4.2.2.10 System Repair—The system is designed to facilitate location replacement or repair of components.

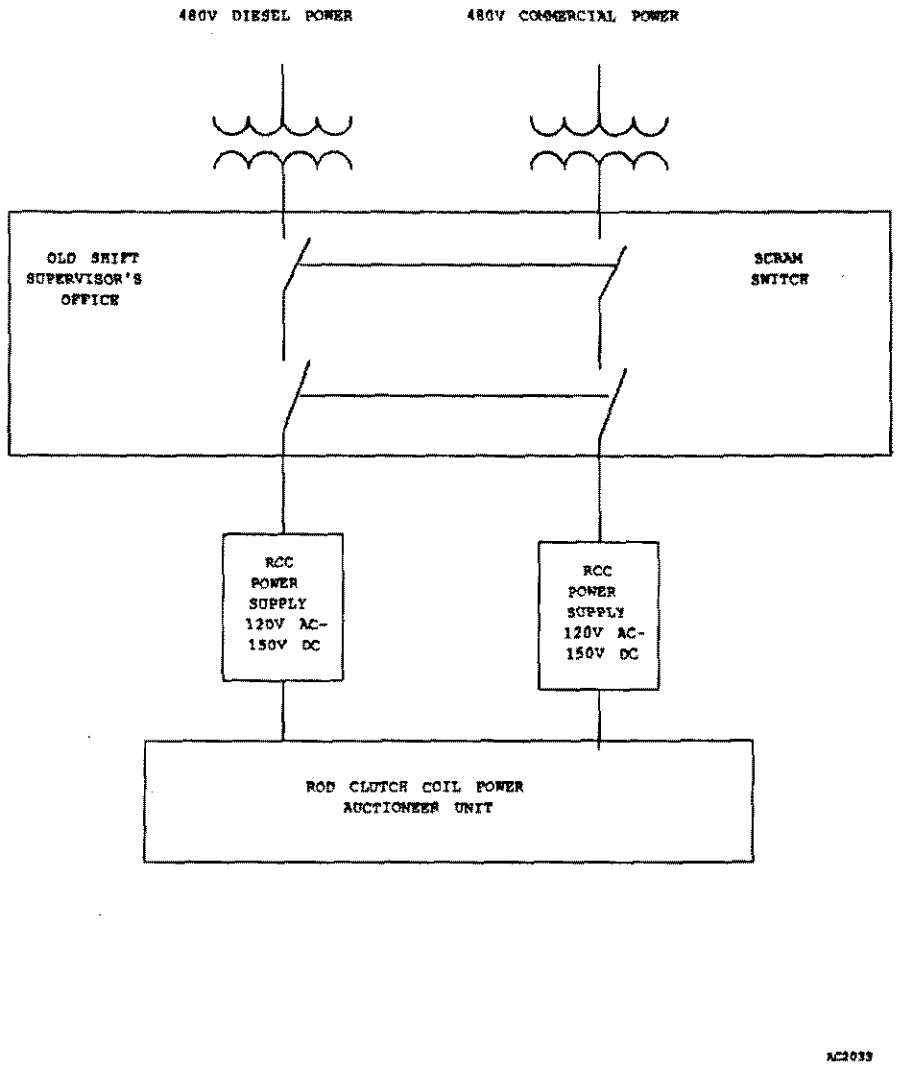

Figure 7.4-1. Emergency backup manual scram. **(For Information Only)**

7.5 Safety-Related Display Instrumentation

This section describes the instrumentation systems that provide information to reactor operators, enabling them to perform required safety functions, monitor safety system operation, and monitor automatic safety system actuation. Instrumentation that monitors the status of safety-related systems is not necessarily designated safety-related instrumentation.

7.5.1 General

The ATR Plant Protective System (PPS) consists of subsystems that have been determined by analysis to mitigate the consequences of design-basis accidents. These subsystems ensure the required protection of the general public health and safety and the safety of the plant by means of various automatic protective actions to shut down the reactor and to preserve fuel boundary and confinement integrity. The two systems that are pertinent to this discussion that are part of the PPS are the Reactor Shutdown System (RSS) and the Engineered Safety Features (ESF). Protective functions of the RSS are discussed in Section 7.2; the ESF is discussed in Section 7.3.

Safety-related display instrumentation includes indication of process variables required by operating personnel, both to operate the plant in a safe manner, including taking preplanned manual actions to accomplish a safe plant shutdown, and to monitor the effectiveness of automatic protective actions. Information is also provided regarding the release of radioactive materials to allow for early indication of the need to initiate action to protect the public health and safety, and for an estimate of the magnitude of a release. Indication is also provided to enable operators to verify that the PPS is capable of performing its protective function.

Primary display instrumentation includes analog indicators, a microprocessor-based chart recorder, an annunciator panel, and valve position indicators located on reactor control room panel P-11 (RCR P-11). The annunciator panel provides visual status indication of PPS equipment. It can individually show the condition of each system function by channel. In addition to the annunciators, the Sequence of Events Recorder (SER) records and provides a printout of the order in which abnormal conditions were detected.

Secondary display instrumentation consists of computer-generated displays of PPS variables available on the operator consoles in the reactor control room. These displays store historical data on monitored variables.

None of the PPS display instrumentation or plant computer displays of PPS signals are designed as safety-related equipment. They are electrically isolated from the PPS channels via isolation devices. All PPS equipment up to and including the isolation devices is considered to be within the safety-related boundary. While some PPS systems (or parts of systems) have been added or upgraded over the life of ATR, the original design and installation of display systems were completed as part of the original construction. In all cases, the original systems and all modifications were designed and implemented using then current standards (EG&G Idaho 1994, Chapter 11).

7.5.2 Reactor Shutdown System

The ATR RSS comprises safety-related analog and digital instrument subsystems and logic channels that initiate safety-rod insertion (scram). The display instrumentation associated with the RSS instrument channels is not safety-related equipment at ATR; therefore, isolation amplifiers (buffers) electrically separate the displays from the safety-related instrument channels (INEEL 2000).

The RSS subsystems for which display instrumentation is provided include:

- Reactor Vessel Differential Pressure
- Reactor Vessel Outlet Pressure
- Reactor Vessel Inlet Pressure
- Emergency Coolant Flow Discharge
- Emergency Coolant Pump Recirculation Flow
- Quadrant Differential Temperature
- Reactor Vessel Water Level
- Reactor Vessel Inlet Temperature
- Reactor Vessel Outlet Temperature
- Neutron Level (Intermediate and Power Range)
- Wide-Range Neutron Level
- Coolant Radioactivity (Fission Break)
- Seismic Level.

Table 7.5-1 summarizes PPS display instrumentation characteristics, which include RSS subsystem display instrumentation.

7.5.2.1 Reactor Vessel Differential Pressure. (See Section 7.2.1.1.2.1) The status of automatic RSS and ESF actuation is indicated by audible and visual alarms on RCR P-11. Annunciators are provided to alert operators of both pre-trip (HI/LO) and trip (HI-HI and LO-LO) differential pressure conditions.

Continuous display of reactor differential pressure parameters is provided via analog indicators on RCR P-11. The reactor differential pressure parameter can be displayed on the RCR Console Display System (CDS).

7.5.2.2 Reactor Vessel Outlet Pressure. (See Section 7.2.1.1.2.3) The status of automatic PPS actuation is indicated by audible and visual alarms on RCR P-11. Annunciators are provided to alert operators of both pre-trip (HI/LO) and trip (HI-HI and LO-LO) pressure conditions.

Continuous display is not provided for this PPS variable on RCR P-11; however, the reactor vessel outlet pressure parameter can be displayed on the RCR Console Display System (CDS).

7.5.2.3 Reactor Vessel Inlet Pressure. (See Section 7.2.1.1.2.2) The status of automatic RSS and ESF actuation is indicated by audible and visual alarms on RCR P-11. Annunciators are provided to alert operators of both pre-trip (HI-LO) and trip (HI-HI and LO-LO) pressure conditions.

Continuous display of Vessel Inlet Pressure parameters is provided via analog indicators on RCR P-11. The reactor vessel inlet pressure parameter can also be displayed on the RCR Console Display System (CDS).

7.5.2.4 Emergency Coolant Flow Discharge. (See Section 7.2.1.1.2.4) The status of automatic RSS actuation is indicated by audible and visual alarms on RCR P-11. Annunciators are provided to alert operators of both pre-trip (LO) and trip (LO-LO) flow conditions.

Continuous display of emergency coolant discharge flow parameters is provided via analog indicators located on RCR P-11. The reactor emergency coolant discharge flow parameter can also be displayed on the RCR Console Display System (CDS).

7.5.2.5 Emergency Coolant Pump Recirculation Flow. (See Section 7.2.1.1.2.5) The status of automatic PPS actuation is indicated by audible and visual alarms on RCR P-11. One annunciator is provided to alert operators of a low flow reactor trip.

Display of Emergency Coolant Pump Recirculation Flow parameters is available on the DCS console in the reactor control room.

7.5.2.6 Quadrant Differential Temperature. (See Section 7.2.1.1.2.6) The status of automatic PPS actuation is indicated by audible and visual alarms on RCR P-11. Annunciators are provided to alert operators of pre-trip (HI) and trip (HI-HI) differential temperature conditions in each of the four quadrants.

No continuous indication of quadrant differential temperature parameters is provided from the PPS instrument channels.

7.5.2.7 Reactor Vessel Water Level. (See Section 7.2.1.1.2.9) The status of automatic PPS actuation is indicated by audible and visual alarms on RCR P-11. Annunciators are provided to alert operators of pre-trip (LO) and trip (LO-LO) water level conditions and on the RCR Console Display System (CDS).

During reactor conditions where the EFIS is in manual and there are irradiated fuel elements in the reactor vessel, the trip (LO-LO) vessel level alarm is safety-related because it performs the function of alerting operators of low reactor water level. The PPS Vessel Level alarm is considered inoperable when the reactor vessel water level is at or below the reactor vessel lower drain.

Continuous monitoring of reactor vessel level parameters is provided via analog indicators on RCR P-11.

7.5.2.8 Reactor Vessel Inlet Temperature. (See Section 7.2.1.1.2.7) The status of automatic PPS actuation is indicated by audible and visual alarms on RCR P-11. Alarms are provided to alert operators of both pre-trip (HI) and trip (HI-HI) temperature conditions.

Continuous display of vessel inlet temperature parameters is provided on a digital readout chart recorder located on RCR P-11. The reactor vessel inlet temperature parameter can also be displayed on the RCR Console Display System (CDS).

7.5.2.9 Reactor Vessel Outlet Temperature. (See Section 7.2.1.1.2.8) The status of automatic PPS actuation is indicated via audible and visual alarms on RCR P-11. Alarms are provided to alert operators of both pre-trip (HI) and trip (HI-HI) temperature conditions.

Continuous display of vessel outlet temperature parameters is not provided on the RCR P-11; however, the reactor vessel outlet temperature parameter can be displayed on the RCR Console Display System (CDS).

7.5.2.10 Neutron Level (Intermediate and Power Range). (See Section 7.2.1.1.2.10) The status of automatic PPS actuation is indicated by audible and visual alarms on RCR P-11. Alarms are provided during both pressurized and depressurized modes of operation to alert operators of both pre-trip (HI) and trip (HI-HI) neutron flux level conditions.

Continuous display of neutron flux level in the intermediate and power ranges is provided on chart recorders located on RCR Panel K. Adjacent to each of the channel recorders are three indicating lights that identify if the channel is in the "startup", "intermediate" or "normal" range. The neutron level parameter can be displayed on the RCR Console Display System (CDS).

7.5.2.11 Wide-Range Neutron Level. (See Section 7.2.1.1.2.12) The status of automatic PPS actuation is indicated by audible and visual alarms on RCR P-11. Alarms are provided during both pressurized and depressurized modes of operation to alert operators of both pre-trip (HI) and trip (HI-HI) neutron-flux levels and unacceptable rate of change (period) conditions. Continuous display of this variable is provided via chart recorders on RCR Panel H. In addition, a digital display below the recorders indicate which gain range (1 through 12) the channel instrument is in. The wide-range neutron level parameter can be displayed on the RCR Console Display System (CDS).

7.5.2.12 Fission Break. (See Section 7.2.1.1.2.11) The status of automatic PPS actuation is indicated by audible and visual alarms on RCR P-11. Alarms are provided to alert operators of both pre-trip (HI) and trip (HI-HI) radiation conditions.

Continuous display of radiation levels is provided via a three-channel microprocessor-based digital readout chart recorder on RCR Panel L. The start up and normal gain selection is indicated by switch position and indicator lights on RCR Panel L. The fission break parameter can be displayed on the RCR Console Display System (CDS).

7.5.2.13 Seismic Level. (See Section 7.2.1.1.2.13) The status of automatic PPS actuation is indicated by audible and visual alarms on RCR P-11. One annunciator is provided for (HI) ground acceleration.

Continuous display of seismic parameters is not provided.

7.5.3 ESF Display Instrumentation

The ATR Engineered Safety Features include safety-related analog and digital instrumentation and logic that initiate and control the ESF systems. The display instrumentation included in the ESF control system is not safety-related equipment at ATR; therefore, isolation amplifiers (buffers) electrically separate the displays from the safety-related instrument channels.

The ESF systems:

- Primary Coolant System (PCS) Over-Pressure Relief System
- Primary Pump Shutoff System
- RSS Pressurizing and Gland Seal Pump Shutoff System
- Vessel Vent System
- Emergency Firewater Injection System (EFIS)

- Radiation Monitoring and Seal System (RMSS)
- The Vessel Level Alarm actuation is an ESF function provided by the inputs from the RSS Reactor Vessel Water Level Subsystem or by the reactor vessel water level channels of the EFIS. The purpose of the Vessel Level Alarm System actuation is to alert the operators of low vessel liquid level for potential actuation of the Emergency Firewater Injection System (EFIS). The vessel alarm is used to alert against low probability events that result in a loss of Primary Coolant System inventory during depressurized and outage operations when irradiated fuel elements are in the reactor vessel. This ESF is discussed in Chapter 6, Section 6.9.

Table 7.5-1 summarizes PPS display instrumentation characteristics which include ESF display instrumentation.

7.5.3.1 PCS Over-Pressure Relief System. The PCS Over-Pressure Relief System consists of two mechanically actuated relief valves and associated piping. There are no instrumentation or controls included in this ESF system.

7.5.3.2 Primary Pump Shutoff System. The Primary Pump Shutoff System is actuated by the Reactor Vessel Differential Pressure Subsystem discussed in Section 7.5.2.1. There is no separate ESF display instrumentation included for the ESF portion of the subsystem.

7.5.3.3 RSS Pressurizing and Gland Seal Pump Shutoff System. The Pressurizing Pumps and Gland Seal Pumps Shutoff System is actuated by the Reactor Vessel Inlet Pressure Subsystem discussed in Section 7.5.2.3. There is no separate ESF display instrumentation included for the ESF portion of the subsystem.

7.5.3.4 Vessel Vent System. The Vessel Vent System provides a depressurization vent for the ATR Reactor Vessel ensuring that the EFIS can maintain water over the core following a complete loss of flow accident (CLOFA). The only display instrumentation included in the system shows open and closed valve position indication on reactor control room panel P-11 (RCR P-11) and in Room 121. Audible and visual alarms on RCR P-11 annunciator panel will alert operators of the vent valve position (VENT VALVE NOT SEATED) and low instrument air or nitrogen supplied to the vent valve actuators (VESSEL VENT SYSTEM ABNORMAL). The valve position indicators and annunciator are actuated by limit switches mounted on vent valves. The low supply pressure alarms are actuated by pressure switches in the instrument air and nitrogen supply lines.

7.5.3.5 Emergency Firewater Injection System. The status of automatic actuation of both bottom head and upper vessel firewater injection on low level are indicated by audible and visual alarms on RCR P-11. Annunciators are provided to alert operators of both pre-trip (FIS REACTOR VESSEL LEVEL LO) and trip (FIS REACTOR BOTTOM HEAD INJECTION & FIS REACTOR UPPER VESSEL INJECTION) level conditions.

The status of automatic actuation of simultaneous bottom head and upper vessel injection on low vessel pressure is indicated by audible and visual alarms on RCR P-11. Annunciators are provided to alert operators of both pre-trip (FIS REACTOR VESSEL PRESSURE LO) and trip (FIS REACTOR INJECTION) pressure conditions. Additionally, an alarm is provided on RCR P-11 if any of the pressure bypass switches (EFIS PRESSURE TRIP BYPASS) are in the bypass position.

Continuous display of EFIS vessel level and EFIS pressure parameters is provided via analog indicators located on RCR P-11.

7.5.3.6 Radiation Monitoring and Seal System. The status of automatic RMSS actuation is indicated by audible and visual alarms located on RCR P-11. Alarms are provided to alert operators of pre-trip (STACK RADIATION DISCHARGE HI) and trip (STACK RADIATION DISCHARGE HI-HI) radiation levels at the ATR stack. Continuous display of the stack radiation levels is available on analog chart recorders in the reactor control room.

7.5.4 N-16 System

The status of the N-16 System is provided by input signals from the ten data channels to the N-16 recorders and the RDAS. The N-16 recorders are used to provide a relative indication of the signal level from the N-16 channels and setpoint alarm settings. The N-16 recorders, once set at 100% during full power operation, are used for detecting changes in reactor power.

In addition to the continuous readings of the recorders and data available from RDAS, annunciators are provided to alert the operators of inner/outer high level, inner/outer lobe trouble (low high voltage, In test condition, or 12 volt dc power failure), Inner Lobe N-16 in high gain, Sample water to N-16 monitor flow abnormal, and Sample water to N-16 monitor low pressure.

For more information on the N-16 System see Section 7.6.

7.5.5 Log Count Rate Metering System

The Log Count Rate Metering (LCRM) System provides adequate information concerning low level neutron flux and neutron flux changes in the core to allow manipulation of reactor core components. This information minimizes the threat of an unplanned criticality. This system also provides operators with information of the neutron flux within the reactor core during reactor startup.

The LCRM system consists of two redundant channels that monitors the neutron flux in the reactor from 10^{-11} to 10^{-5} N_F. Count-rate information is displayed on a recorder and the console display system (CDS) located in the reactor control room. A meter and a speaker are available on the reactor top where refueling and experiment changes are completed. The reactor top count rate meter has an adjustable high and low setpoint used to actuate an alarm. An increase in the counting rate will activate the meter alarm to warn reactor top personnel of a possible approach to criticality. The reactor top meter is turned off during reactor operation.

Annunciators are provided in the reactor control room to alert the operators of the LCRM channel loss of power, count rate meter hi-lo alarms and the channel standby mode.

7.5.6 Log-N Period

The Log-N Period System provides an indication of reactor power from 10^{-7} N_F to 10 N_F, and also of reactor periods from -30 seconds to +3 seconds. These ranges provide an indication of power generation between criticality and full power. The Log-N portion of the Log-N Period System is used for the initial conditions (Depressurized Operation) for reactor power.

The Log-N amplifiers provide a voltage signal that is proportional to the logarithm of the neutron flux to the Log-N recorders and the recorder via slidewires re-transmit a signal to the RDAS.

Besides the indication provided by the Log-N recorders and the RDAS, annunciators are provided to alert the operators of Log-N trouble (caused by the removal of test block ITB-2, calibration switch in the Calibrate position, or a power supply failure) and ONE LOG-N TEST BLOCK REMOVED indication when either ITB-1 or ITB-2 is removed.

7.5.7 Water Power Calculator System

The Water Power Calculator System, using the primary coolant flow and inlet and outlet temperatures, provides an indication of the power generation in MW for both the total power and the four reactor quadrants. The water power calculators calculate the powers and provide this information to recorders in the reactor control room and to the RDAS.

Besides the indication provided by the recorders and the RDAS, annunciators are provided to alert the operators of high quadrant water power and high total water power.

7.5.8 Emergency Firewater Canal Makeup System

Maintaining the water level in the storage portion of the canal provides assurance that decay heat will be adequately removed from the stored irradiated fuel elements. With proper heat removal, the cladding integrity is ensured and fission products are retained within the fuel plate. The significant concern is actuation of makeup to the storage portion of the canal to ensure water inventory is maintained during a canal draining event. A safety-related canal low level alarm with a setpoint of at least 18.5 ft (approximately 1.5 ft below normal level) is provided to allow time for manual actuation of the canal low pressure demineralized water (LDW) makeup system to the irradiated fuel storage area. The Emergency Firewater Canal Makeup System has been selected as the primary makeup system and the low pressure demineralized water (LDW) make-up as the backup system to the irradiated fuel storage area. At a canal level of 8 ft, 12 ft below normal canal level, the Emergency Firewater Canal Makeup System control circuitry will allow firewater to flow into the storage area. When this occurs, the operators will be alerted by an annunciator in the reactor control room that indicates that the Canal firewater injection has actuated.

Table 7.5-1. Summary of PPS display instrumentation.

Parameter	Display type	Indicated range	Redundancy	Annunciation
Reactor vessel DP	Console display system (CDS) analog ind.	0–200 psid	3 channels	Vessel DP HI-HI Vessel DP HI-LO Vessel DP LO-LO CDS Annunciation
Reactor vessel outlet pressure	CDS	0–500 psig	3 channels	Outlet pressure HI-HI Outlet pressure HI-LO Outlet pressure LO-LO CDS Annunciation
Reactor vessel inlet pressure	CDS analog ind.	0–500 psig	3 channels	Inlet pressure HI-HI Inlet pressure HI-LO Inlet pressure LO-LO
Emergency coolant flow	CDS analog ind.	0–7,000 gpm	3 channels	Emergency flow LO Emergency flow LO-LO CDS Annunciation
Emergency pump recirculation flow	None	N/A	3 channels	Emergency pump recirc flow LO
Quadrant differential temperature	None	N/A	3 channels per quadrant	Diff. temp. quad. 1 HI-HI Diff. temp. quad. 2 HI-HI Diff. temp. quad. 3 HI-HI Diff. temp. quad. 4 HI-HI Diff. temp. quad. 1 HI Diff. temp. quad. 2 HI Diff. temp. quad. 3 HI Diff. temp. quad. 4 HI
Reactor vessel water level	CDS analog ind.	0–98 in. WC	3 channels	Reactor vessel level LO Reactor vessel level LO-LO
Reactor vessel inlet temperature	CDS chart recorder/dig. readout	50–200°F	3 channels	Inlet temperature HI Inlet temperature HI-HI
Reactor vessel outlet temperature	CDS	50–250°F	3 channels	Outlet temperature HI Outlet temperature HI-HI CDS Annunciation

Table 7.5-1. (continued).

Parameter	Display type	Indicated range	Redundancy	Annunciation
Neutron level	CDS analog ind.	0–1.5 N_F	3 channels	Neutron level HI Neutron level HI-HI CDS Annunciation
Wide-range neutron level	Chart recorders CDS	0–1.5 N_F	3 channels	Wide range neut. lev. HI Wide range neut. lev. HI-HI CDS Annunciation
Coolant radioactivity (Fission Break)	Chart recorder/Dig. readout CDS	0.5–50 R/hr	3 channels	Fission break HI Fission break HI-HI CDS Annunciators
Seismic level	None	N/A	3 channels	Seismic HI
PCS over-pressure relief system	None	N/A	2 valves	None
Primary pump shutoff system	None	N/A	3 channels (from RSS)	None
Pressurizing pump/gland seal pump shutoff system	None	N/A	3 channels (from RSS)	None
Vessel vent system	Valve position	Open/closed	2 valves	Vent valve not seated Vessel Vent System abnormal
EFIS reactor vessel pressure	Analog ind.	5–25 psia	3 channels	FIS Reactor Vessel Pressure LO FIS Reactor Injection FIS Pressure Trip Bypass
EFIS reactor vessel level	Analog ind.	1 ft 4 in –11 ft 10 in	3 channels	FIS Reactor vessel level LO FIS Reactor bottom head injection FIS Reactor upper vessel injection
Radiation monitoring and seal system	Chart recorders	10^{-6} µCi/cc –10^{-3} µCi/cc	3 channels	Stack discharge Radiation HI Stack Discharge Radiation HI-HI CDS Annunciators

7.6 All Other Instrumentation Systems Safety-Related or Important to Safety

This section contains information on all other plant instrument systems safety-related or important to safety that are not included under Reactor Shutdown System (Section 7.2), Engineered Safety Features Actuation Subsystems (Section 7.3), Systems required for Safe Shutdown (Section 7.4), and Safety-Related Display Instrumentation (Section 7.5).

Experiment instrumentation systems important to safety are discussed in Chapter 10 (Experiment and Irradiation Facilities).

7.6.1 Reactor Data Acquisition System

The Reactor Data Acquisition System (RDAS)[a] is a computer support system for the ATR that provides indications and alarms to support safe reactor operation. The RDAS provides the following support.

- It provides "real-time" monitoring of important plant operating parameters.
- It fosters safe operation of the plant by presenting and displaying information to the plant operators.
- It has a Lobe Power Calculating and Indicating System, which the console operator uses to maintain the correct power distribution throughout the core.
- It stores data as acquired or computed to support future trend displays or event reconstructions.
- It allows remote access of its own data resource via conventional telecommunications circuits for monitoring plant conditions during a general plant evacuation.

Information is presented through various input/output devices including line printers, alphanumeric video terminals, and the graphic workstation terminals in four modes: continuous display, request functions, surveillance, and logging/reporting.

The RDAS consists of two complete computer systems that provide redundancy as shown in Figure 7.6-1. Each computer system is independent of the other, and most input signals are bifurcated and sent to each computer system. A small number of nonsafety-related signals are available to only one computer at a time. Each computer system is also separated and located in separate cubicles. These computer systems are referred to as the Data Acquisition computer (DAC) and the Data Analysis Computer, (DAN), differing in name only. The DAC and the DAN are each assigned two reactor control room annunciators: Stalled and Mode Switch. The stall detector will generate an alarm when certain important software programs fail to run on schedule. When the stall annunciator is alarming, primary data acquisition from that computer may have been interrupted. The computer can automatically recover from certain (but not all) software stall conditions. A key-locked operating mode switch is installed as a security measure to constrain user access to certain system functions. When the switch is moved from the OPERATE position, an alarm is maintained until the switch is returned to OPERATE.

---

[a]. The output from the safety-related detectors in the N-16 system is routed to the RDAS for processing. The section of the RDAS that processes the N-16 system data, including the software and display, is safety-related.

A terminal switching network is provided to allow manual transfer of certain transmitted or received signals between the two RDAS computers. Manual terminal switching is performed by using either the Master switch to transfer all the modules simultaneously, or by an individual channel switch to transfer a single channel. A key-lock switch on the Master module provides a lockout as a security measure to prevent unauthorized switching of any switches. In the event of a computer failure, or if a computer is taken out of service, all the channels are manually switched to the operating computer. There is no automatic transfer of channels.

7.6.1.1 Power Requirements. The power requirements for the RDAS are provided by 120 Vac power panels 670-E-30 and 670-E-106. Power panel 670-E-30 is fed from the Utility Uninterruptible Power Supply (UPS) 670-E-115 and power panel 670-E-106 is fed from the Instrument UPS 670-E-117.

7.6.1.2 Design Basis

7.6.1.2.1 Applicable Codes and Standards—The RDAS was designed and built to comply with applicable portions of the standards below. The version of each standard most current as of February 17, 1983, was used for instrumentation.

NE (RDT) Standards:

C 1-1T Instrumentation and Control Equipment Grounding and Shielding Practices

F 2-9T Reliability Assurance

Other Codes and Standards:

Department of Energy

DOE Order 1360.2B Unclassified Computer Security Program

WASH 1245-1 Standard for Fire Protection of AEC Electronic Computer/Data Processing Systems

Department of Energy (Idaho Operations Office)

Operational Safety Standards, ID Appendix 0550 — Standard Operational Safety Requirements

ID-12044 Operational Safety Design Criteria Manual

INEL Architectural Engineering Standard

National Fire Protection Association (NFPA)

NFPA-70-1981 National Electrical Code

The Contractor

STD-7027 Standard Electrical and Electronic Fabrication

National Bureau of Standards Federal Information Processing Standards

3-1 Recorded Magnetic Tape for Information Interchange (800 CPI, NRZI), June 0, 1973

25 Recorded Magnetic Tape for Information Interchange (1600 CPI PE), June 0, 1973

31 Guidelines for ADP Physical Security and Risk Management, June 1974

38 Guidelines for Documentation of Computer Programs and Automated Data Systems, February 15, 1976

62 Operational Specifications for Magnetic Tape Subsystems, February 16, 1979

63 Operational Specifications for Rotating Mass Storage Subsystems, August 27, 1979

65 Guideline for Automated Data Processing Risk Analysis, August 1, 1979

Department of Defense

MIL-Q-9858A Quality Program Requirements

7.6.1.3 Analysis. Signals from safety-related systems are buffered from the RDAS data acquisition circuitry using isolation devices. If the RDAS should fail, the reactor can be shut down with no ensuing damage to the reactor.

7.6.1.3.1 General Functional Requirements—The RDAS provides "real-time" monitoring of safety-related operating parameters and provides remote access to these parameters via conventional telecommunications circuits. The N-16 system is needed only (as a safety-related system) during power changes, during which time the display is adequately updated for this purpose. The output from the safety-related detectors in the N-16 system is routed to the RDAS for processing. The section of the RDAS that processes the N-16 system data, including the software and display, is safety-related.

7.6.1.3.2 Quality of Equipment—Components and modules are of a quality that is consistent with minimum maintenance requirements and low failure rates. Quality levels are achieved through the specification of requirements known to promote high quality, such as requirements for design, for derating components, for manufacturing, quality control, inspection, calibration, and testing. See Chapter 17 (Quality Assurance).

7.6.1.3.3 Channel Integrity—The RDAS is essential for monitoring reactor conditions and is designed to maintain the required functional capability.

7.6.1.3.4 Channel Independence—The DAC and DAN computers are located in different cubicles and electrically isolated from each other. Each computer system is independent from the other and most input signals are bifurcated and sent to each computer's data acquisition system.

7.6.1.3.5 Derivation of System Inputs—To the extent feasible and practical, inputs to the RDAS are derived from signals that are direct measures of the desired variables.

7.6.1.3.6 Bypasses—The RDAS is not bypassed during reactor operation.

7.6.1.3.7 Test and Calibration—Detailed operating procedures have been prepared to ensure that the RDAS functions correctly after hardware or software changes have been made.

7.6.1.3.8 Maintenance—No online maintenance is permitted without administrative approval.

7.6.1.3.9 Readout Information—Information provided by the RDAS at the reactor Console Display System terminals may be updated continuously or on demand, depending on the display design. Additional information is available to the reactor operators on hardcopy reports, as needed.

7.6.2 N-16 System

The N-16 System includes flow channels, radiation detectors, and electronics. The N-16 System provides the only direct method by which lobe power distribution can be determined. The lobe powers are considered in the safety analysis and must be controlled consistent with the safety analysis. The N-16 system provides indication only. The N-16 System does not provide an active control function. A quadrant thermal power distribution is available from the Water Power Calculator System. Comparison of the two independent distributions provides a check on the N-16 operation. The quantitative assessment of the uncertainty in the lobe power indication is documented in EDF TRA-ATR-1211, Rev 1 (Atkinson and McCracken 1997). The effective range of the N-16 System is from N_L (i.e., 0.01 N_F) to N_F. Above the N-16 recorders in the Reactor Control Room is a STARTUP - NORMAL range switch with light indicators. When the switch is in the STARTUP position (operation below 3 N_L) the N-16 amplifiers operate with a 100 gain factor. With the switch in the NORMAL position (operation from approximately 3 N_L to N_F) the 100 gain factor is not in affect.

The N-16 System monitors fast flux in the reactor by measuring the N-16 beta activity. The flow system for one of the N-16 channels is shown in Figure 7.6-2. Demineralized water is routed via tubing into the reactor vessel, through re-entrant tubes in the core, then out of the reactor vessel with ten independent flow channels. The demineralized water source can be the Low-pressure Demineralized Water (LDW) System or the PCS Bypass Demineralizer (BPD) System. Each N-16 flow channel has independent inlet flow indication and control. N-16 flow rates are controlled manually by the process operators to a specific value and tolerance.

There are ten N-16 flow channels with eight re-entrant tubes in the reflector surrounding the fuel annulus and two in the center flux trap baffle. Four of the eight tubes in the reflector are next to the five and six fuel element positions in each corner of the core. These are called the inner N-16 channels because they are inboard of the outer shim control cylinders and near the fuel annulus. The other four re-entrant tubes are on the primary compass points outboard of the outer shim cylinders. These are called the outer N-16 channels. The re-entrant tubes in the center flux trap baffle are in the H-3 and H-11 core positions. The re-entrant tube in the H-3 position extends from the bottom up to the core midplane. The re-entrant tube in the H-11 position extends over the full height of the active core. This design was originally installed to allow for detection of axial perturbations in the reactor power distribution.

N-16, with a nominal 7.4 second half-life for β decay, is generated in the core region through the O-16(n,p)N-16 fast neutron reaction. The activated water from the re-entrant tubes is routed through a bank of ten separate beta detectors to measure N-16 activity. The flow delay time from the core to the detector is roughly 15 to 20 seconds. Flow delay times vary due to different tubing lengths in each flow channel. Signals from the detectors are proportional to the β activity in the activated water and thus to the local fast flux and the power near the ten re-entrant tubes.

As illustrated in Figure 7.6-3, the output from the safety-related detectors in the N-16 System is routed to the RDAS and multiple-channel recorder for processing. The section of the RDAS that processes the N-16 system data, including the software and display, is safety-related.

7.6.2.1 Design Basis

7.6.2.1.1 Applicable codes and Standards—The N-16 System was designed and built to comply with applicable portions of the following standards. The version of each standard, most current as of October 1, 1977, was used for instrumentation.

NE (RDT) Standards:

C 17-4T	General Instrumentation
F 4-20T	Operation and Maintenance Manuals

Other Codes and Standards:

NFPA 70-1975	National Electric Code (National Fire Protection Association)

7.6.2.2 Analysis

7.6.2.2.1 General Functional Requirements—The N-16 System provides the only direct method by which lobe power distribution can be determined. This function is required to maintain core power distribution within ATR's analyzed operating envelope.

7.6.2.2.2 Single Failure Criterion—The N-16 System is not designed to a single failure criterion. It does not provide an active control function. If the N-16 System should fail, the reactor can be shut down with no ensuing damage to the reactor.

7.6.2.2.3 Quality of Equipment—Components and modules are of a quality that is consistent with minimum maintenance requirements and low failure rates. Quality levels are achieved through the specification of requirements known to promote high quality, such as requirements for design, for derating components, for manufacturing, quality control, inspection, calibration, and testing. See Chapter 17 (Quality Assurance).

7.6.2.2.4 Channel Integrity—The N-16 System is essential for monitoring lobe power and is designed to maintain the required functional capability.

7.6.2.2.5 Bypasses—The N-16 System is not bypassed during reactor operation.

7.6.2.2.6 Test and Calibration—Detailed operating and maintenance procedures have been prepared to ensure that the N-16 System is tested and calibrated correctly.

7.6.2.2.7 Maintenance—No online maintenance is required or permitted without administrative approval.

7.6.2.2.8 Readout Information—Readout information is provided in the control room in the form of the gain indicators and recorders. System information is also recorded on the RDAS.

In addition to the continuous readings of the recorders and data available from RDAS, annunciators are provided to alert the operators of inner/outer lobe high level, inner/outer lobe trouble (low high voltage, in test condition, or 12 volt dc power failure), inner lobe N-16 in high gain, sample water to N-16 monitor flow abnormal, and sample water to N-16 monitor low pressure.

7.6.3 Log Count Rate Metering System

The Log Count Rate Metering (LCRM) System provides the reactor operator with information concerning low level neutron flux and neutron flux changes in the core during shutdown and reactor startup. This information provides the protection needed to minimize the potential for a criticality during shutdown core changes. This system also provides operators with an audible signal, a visual meter indication, and a recorded record of the neutron flux within the reactor core.

The LCRM system monitors the neutron flux in the reactor from 10^{-11} to 10^{-5} N_F. The system consists of two redundant channels that display count-rate information on a recorder located in the reactor control room. The LCRM system is powered by the battery-backed power supply. Safety rod, OSCC, and neck shim withdrawal is blocked (reactor power < 10^{-5} N_F) if both channels go off-scale or if a fission chamber is moving. Figure 7.6-4 illustrates the basic system operation. Cross-hatching on figures indicates safety-related/nonsafety-related boundary.

The LCRM system is shown in the form of a block diagram in Figure 7.6-5. The system consists of two independent monitoring channels. Each channel has a fission chamber and drive, preamplifier (located in the nozzle trench), reactor control room recorder preamplifier, log count rate meter calibrator, power supplies, and an interconnecting cable.

The fission chambers that sense neutron flux for the log count rate system are mounted in carriages suspended in thimbles in the northeast and southwest sections of the reactor. An electrically operated drive system is used to position the chamber nearer to the core during shutdown or startup. The chamber position can be adjusted so that the system can cover the entire startup regime from 10^{-11} to 10^{-5} N_F and above.

The reactor top log count rate meter has an adjustable high and low audio alarm. An increase in the counting rate during shutdown will activate the audio alarm to warn reactor top personnel of a possible approach to criticality. The reactor top log count meter is turned off during reactor operation.

Each fission chamber drive has buttons on the reactor console for manual insertion and withdrawal of the chamber. There are indicator lights associated with positions for insert, withdraw, inner position, midposition, and fully withdrawn.

7.6.3.1 Design Basis

7.6.3.1.1 Applicable Codes and Standards—The LCRM System was designed and built to comply with applicable portions of the following standards. The version of each standard, most current as of October 1, 1977, was used for instrumentation.

NE (RDT) Standards:

C 1-1T	Instrumentation and Control Equipment Grounding and Shielding Practices
C 15-10T	Logarithmic Count Rate Source Range Neutron Flux Monitoring System
C 16-1T	Supplementary Criteria and Requirements for RDT Reactor Plant Protective Systems
C 16-3T	PPS Buffers
C 17-4T	General Instrumentation
F 2-9T	Reliability Assurance
F 3-2T	Calibration Program Requirements
F 4-20T	Operation and Maintenance Manuals
F 7-2T	Packaging, Packing, and Marking of Components for Shipping and Storage
F 7- 3T	Marking of Components and Parts

Other Codes and Standards:

NRC Regulatory Guides (To the extent they augment the requirements of SDD 7.5.4 and applicable NE standards).

10 CFR 50 Appendix B	Quality Assurance Criteria for Nuclear Power Plants and Fuel Processing Plants
ANSI-N45-2	Quality Assurance Requirements for the Design of Nuclear Power Plants

The Contractor

STD-7027	(Installation only) Standard Electrical and Electronics Fabrication
NFPA 70-1975	National Electric Code (National Fire Protection Association)
MIL-Q-9858A	Quality Program Requirements (Department of Defense)
ID-12044	Operational Safety Design Criteria Manual

7.6.3.2 Analysis

7.6.3.2.1 General Functional Requirements—The LCRM System (with the exception of the motor drives for the detectors and the calibration modules) is safety-related because it provides the information needed to minimize the potential for a criticality during ATR shutdown core changes.

The LCRM does not provide any protection in the sense of causing any automatic actions that mitigate any type of accident. It is used for monitoring only and satisfies a limiting condition for operation (LCO).

7.6.3.2.2 Single Failure Criterion—The LCRM System consists of two redundant channels, which are physically and electrically separate.

The LCRM System power supply is battery-backed and also backed up with a diesel generator. The system, however, has common switchgear and wiring. The Battery-Backed Power System supplies power to nonsafety-related loads that are not isolated from the safety-related loads. The LCRM does not meet the single failure criterion.

7.6.3.2.3 Quality of Equipment—Components and modules are of a quality that is consistent with minimum maintenance requirements and low failure rates. Quality levels are achieved through the specification of requirements known to promote high quality, such as requirements for design, for derating components, for manufacturing, quality control, inspection, calibration, and testing. See Chapter 17 (Quality Assurance).

7.6.3.2.4 Channel Integrity—The LCRM is essential for minimizing the potential for a criticality during shutdown core changes. The system is designed to maintain the required functional capability.

7.6.3.2.5 Channel Independence—The two LCRM channels are physically separated and electrically isolated from each other.

7.6.3.2.6 Bypasses—The LCRM is not bypassed during core changes and is normally placed in standby when the power reaches N_L (0.01 N_F) during reactor operation.

7.6.3.2.7 Test and Calibration—Detailed operating and maintenance procedures have been prepared to ensure that the LCRM is tested and calibrated correctly.

7.6.3.2.8 Maintenance—Routine maintenance is performed during reactor shutdown. No online maintenance is permitted without administrative approval.

7.6.3.2.9 Readout Information—Readout information is provided by a recorder located in the reactor control room. The reactor top log count rate meter has an adjustable high and low setpoint to actuate an alarm. An increase in the counting rate during shutdown will activate the meter alarm to warn reactor top personnel of a possible approach to criticality. The count rate is also audibly indicated by a speaker. The reactor top log count rate meter is turned off during reactor operation.

In addition to the meter indication and recorder, annunciators are provided in the reactor control room to alert the operators of the LCRM channel loss of power, count rate meter hi-lo alarms and the channel standby mode.

7.6.4 Log-N Period System

The Log-N Period System provides an indication of reactor power from 10^{-7} N_F to 10 N_F, and also of reactor periods from -30 seconds to +3 seconds. These ranges provide an indication of power generation between criticality and full power. Only the Log-N portion of the system is safety-related and is the means for indication for initial conditions (Depressurized Operation) for reactor power. For depressurized operation, the indicated power is approximate as it is based on neutron density, not on thermal power, with calibration settings based on experience. For pressurized operation, the instrument settings are adjusted to thermal power (a calorimetric calibration) at about one third the expected full power level and then the Log-N power is adjusted.

The Log-N Period System is comprised of two parallel subsystems, each consisting of a compensated ion chamber (CIC), CIC power supply, a Log-N amplifier, a Log-N recorder and a period recorder.

To provide a means of adjusting the Log-N reading for variations in lobe power, an offset current is injected into the dc amplifier. This offset current produces a period change, so a switch is provided to inhibit period indication during offset adjustment. The offset is set such that the Log-N units indicate approximately N_L at 1% of the planned full power for the operating cycle.

The Log-N recorders receive signals from the Log-N amplifiers and are calibrated with a log scale ranging from 0.00001 (10^{-7} N_F) to 1000 (10 N_F). The recorders retransmit a signal to the RDAS and cause the following actions to occur.

When the Log-N indication is less than 10^{-5} N_F, then safety rod, neck shim and outer shim cylinder withdrawal is restricted to intermittent and group neck shim withdrawal is permitted.

When the Log-N indication is greater than 10^{-5} N_F, continuous safety rod, neck shim and outer shim cylinder withdrawal is permitted and group neck shim withdrawal is inhibited.

When the Log-N indication is greater than 10^{-3} N_F, automatic withdrawal of the fission chambers is initiated if they have not been previously moved to their outer limit. Transfer of reactor control from "START" to "RUN" is permitted.

When the Log-N indication is greater than 3 N_L, and the reactor control is still in "START", the annunciator "POWER ABOVE 3 N_L IN START" will activate. In addition, the "LCRM IN STANDBY" annunciators are bypassed. The greater than 3 N_L signal is also sent to the RDAS where it is used as an input for constrained vs unconstrained lobe power calculations. If either Log-N is above 3 N_L, the lobe power display is constrained.

7.6.4.1 Design Basis

7.6.4.1.1 Applicable codes and Standards—The Log-N Period System was designed and built to comply with applicable portions of the following standards. The version of each standard, most current as of October 1, 1977, was used for instrumentation.

NFPA 70-1975 National Electric Code (National Fire Protection Association)

7.6.4.2 Analysis

7.6.4.2.1 General Functional Requirements—The Log-N provides indication for reactor power from 10^{-7} N_F to 10 N_F.

7.6.4.2.2 Single Failure Criterion—The Log-N Period System is not designed to a single failure criterion. If the Log-N Period System should fail, the reactor can be shut down with no ensuing damage to the reactor.

7.6.4.2.3 Quality of Equipment—Components and modules are of a quality that is consistent with minimum maintenance requirements and low failure rates. Quality levels are achieved through the specification of requirements known to promote high quality, such as requirements for design, for derating components, for manufacturing, quality control, inspection, calibration, and testing. See Chapter 17 (Quality Assurance).

7.6.4.2.4 Channel Integrity—The Log-N is essential for indication of power generation between criticality and full power. The system is comprised of two identical channels or subsystems which are designed to maintain the required functional capability.

7.6.4.2.5 Bypasses—The Log-N instrumentation is not bypassed.

7.6.4.2.6 Test and Calibration—Detailed operating and maintenance procedures have been prepared to ensure that the Log-N System is tested and calibrated correctly.

7.6.4.2.7 Maintenance—No online maintenance is permitted without administrative approval.

7.6.4.2.8 Readout Information—Readout information of reactor period and power level is provided in the reactor control room on two Log-N recorders. The recorders re-transmit a signal to the RDAS.

Besides the indication provided by the Log-N recorders and the RDAS, annunciators are provided to alert the operators of Log-N trouble (caused by the removal of test block ITB-2, calibration switch in the calibrate position, or a power supply failure) and one LOG-N test block removed indication when either ITB-1 or ITB-2 is removed.

7.6.5 Water Power Calculator System

The Water Power Calculator System using the flow and inlet and quadrant outlet temperature provides an indication of the power generation in MW for both the total power and the four reactor quadrants. The water power calculators calculate the powers and provide this information to recorders in the reactor control room and to the RDAS. The RDAS in conjunction with input received from the N-16 System provides the lobe powers. The lobe powers are monitored to ensure that the operation is within the limits established by the safety analysis.

The Water Power Calculator System consists of two safety-related subsystems, Water Power Calculator 1 (WPC-1) and Water Power Calculator 2 (WPC-2). Both subsystems are typically operational, but only one is providing data for power distribution and integrated power calculations. The second subsystem is on standby. Each subsystem consists of four resistance temperature detector (RTD) inputs for reactor inlet temperature, four RTD inputs for the reactor outlet temperature, one RTD input from the total reactor outlet temperature, and four shared signals from the four quadrant flow transmitters. From these input signals the water power calculators compute each quadrant water power and the total reactor water power. The water power calculators also transmits signals to the reactor total recorder 1 and 2. These recorders provided indication of total inlet and outlet temperature, total differential temperature, total flow, and total water power. These signals are also transmitted to the RDAS.

The thermal power information can be read directly from the control room recorders or can be obtained from the RDAS.

7.6.5.1 Design Basis

7.6.5.1.1 Applicable codes and Standards—The Water Power Calculator System was designed and built to comply with applicable portions of the following standards. The version of each standard, most current as of October 1, 1989 was used for instrumentation.

NFPA 70-1986 National Electric Code (National Fire Protection Association)

The Contractor's Standards (Installation only)

STD-7027 Electrical and Electronic Fabrication

The Contractor's Specifications

Specification T-10 Water Power Computation System

7.6.5.2 Analysis

7.6.5.2.1 General Functional Requirements—The Water Power Calculator System provides the total reactor power and the power of the four quadrants to the RDAS. This input is then used for the thermal power constraint of the reactor lobe powers.

7.6.5.2.2 Single Failure Criterion—The Water Power Calculator System is not designed to a single failure criterion. It does not provide an active control function. If both of the Water Power Calculators should fail, the reactor can be shut down with no ensuing damage to the reactor.

7.6.5.2.3 Quality of Equipment—Components and modules are of a quality that is consistent with minimum maintenance requirements and low failure rates. Quality levels are achieved through the specification of requirements known to promote high quality, such as requirements for design, for derating components, for manufacturing, quality control, inspection, calibration, and testing. See Chapter 17 (Quality Assurance).

7.6.5.2.4 Channel Integrity—The Water Power Calculator System is essential for monitoring quadrant power and is designed to maintain the required functional capability.

7.6.5.2.5 Bypasses—The Water Power Calculator System is not bypassed during reactor operation.

7.6.5.2.6 Test and Calibration—Detailed operating and maintenance procedures have been prepared to ensure that the Water Power Calculator System is tested and calibrated correctly.

7.6.5.2.7 Maintenance—No online maintenance is required or permitted without administrative approval.

7.6.5.2.8 Readout Information—Readout information is provided by the Water Power Calculator System to recorders in the reactor control room and to the RDAS.

In addition, annunciators are provided to alert the operators of high quadrant power and high total water power.

7.6.6 Emergency Firewater Canal Makeup System

Maintaining the water level in the storage canal provides assurance that decay heat will be adequately removed from the stored irradiated fuel elements. With proper heat removal, the cladding integrity is ensured and fission products are retained within the fuel plates. The significant concern is actuation of makeup to the storage portion of the canal to ensure inventory is maintained. The Emergency Firewater Canal Makeup System has been selected as the primary makeup system and low pressure demineralized water (LDW) make-up as the backup system to the irradiated fuel storage area.

The Emergency Firewater Canal Makeup System is a single instrument channel consisting of a level transmitter, power supply, indicator alarm unit, calibration bypass key switch, a manual close switch, valve open/close status lights (both valves), a calibration status light, and two control valves. Once the system has actuated, a manual reset switch must be operated to return the system to a no flow condition.

7.6.6.1 Design Basis

7.6.6.1.1 Applicable codes and Standards—The Emergency Firewater Canal Makeup System was designed and built to comply with applicable portions of the following standards. The version of each standard, most current as of January 1, 1996, was used for instrumentation.

NFPA 70-1995 National Electric Code (National Fire Protection Association)

The Contractor's Standards (Installation only)

STD-7027 Electrical and Electronic Fabrication

7.6.6.2 Analysis

7.6.6.2.1 General Functional Requirements—The Emergency Firewater Canal Makeup System provides the only direct indication of fire water flow into the fuel storage area.

7.6.6.2.2 Single Failure Criterion—The Emergency Firewater Canal Makeup System is not designed to a single failure criterion.

7.6.6.2.3 Quality of Equipment—Components and modules are of a quality that is consistent with minimum maintenance requirements and low failure rates. Quality levels are achieved through the specification of requirements known to promote high quality, such as requirements for design, for derating components, for manufacturing, quality control, inspection, calibration, and testing. See Chapter 17 (Quality Assurance).

7.6.6.2.4 Channel Integrity—The Emergency Firewater Canal Makeup System is an essential backup system for the LDW makeup line to the fuel storage area and is designed to maintain the required functional capability.

7.6.6.2.5 Bypasses—A Calibration Bypass key switch is provided to allow checking and setting the low level alarm trip module without actuating the fire water injection valves. This switch is administratively controlled by an operating/calibration procedure and the shift supervisor has control over the Calibration Bypass key for the switch. In addition, the key cannot be removed from the switch while in the calibration position. A red light flashes at the local control panel whenever the key switch is in the calibration (bypass) mode.

7.6.6.2.6 Test and Calibration—Detailed operating and maintenance procedures have been prepared to ensure that the Emergency Firewater Canal Makeup System is tested and calibrated correctly.

7.6.6.2.7 Maintenance—No online maintenance is permitted without administrative approval.

7.6.6.2.8 Readout Information—There is no readout information provided in the reactor control room. The operators will be alerted by an annunciator in the reactor control room when the Emergency Firewater Canal Makeup System has actuated. An alarm is also actuated on the Console Display System.

7.6.7 Emergency Pump 670-M-10 and 670-M-11 Hardwired Auto Start

The Emergency Pump 670-M-10 and 670-M-11 Hardwired Auto Start controls are designed to start the standby emergency pump on low recirculation flow. Low recirculation flow occurs when the running emergency pump stops. The control circuitry will also start both emergency pumps (670-M-10 and 670-M-11) on loss of power to all four primary coolant pumps.

The safety function of the two safety-related emergency pumps 670-M-10 and 670-M-11 is to provide forced flow core cooling following reactor scram when primary coolant pumps are not operating.

7.6.7.1 Design Basis

7.6.7.1.1 Applicable Codes and Standards—The Emergency Pump 670-M-10 and 670-M-11 Hardwired Auto Start controls are designed and built using as guidance the following standards. The version of each standard, most current as of January 1, 1997 was used.

Codes and Standards:

- National Fire Protection Association (NFPA)
  - NFPA 70 National Electric Code (National Fire Protection Association)
- Institute of Electrical and Electronics Engineers (IEEE)
  - IEEE 279 Criteria for Protection Systems for Nuclear Power Generating Stations
  - IEEE 344 Recommended Practices for Seismic Qualification of Class 1E Equipment for Nuclear Power Generating Stations

7.6.7.2 Analysis

7.6.7.2.1 General Functional Requirements—The Emergency Pump 670-M-10 and 670-M-11 Hardwired Auto Start controls will start the standby emergency pump on loss of power to the four primary coolant pumps. Auto Start will also take place on low recirculation flow separate from the DCS Auto Start circuitry.

7.6.7.2.2 Single Failure Criterion—The Emergency Pump 670-M-10 and 670-M-11 Hardwired Auto Start control circuitry is designed to fail in a safe condition. The analysis performed on the design of the control circuitry determined that design meets the DOE standard for natural phenomena hazards (Thatcher 1997). The recirculation flow auto start feature is designed to start the standby emergency pump on loss of control power or severing of the transmitter impulse lines.

7.6.7.2.3 Quality of Equipment—Components and modules are of a quality that is consistent with minimum maintenance requirements and low failure rates. Quality levels are achieved through the specification of requirements known to promote high quality, such as requirements for design, for derating components, for manufacturing, quality control, inspection, calibration, and testing. See Chapter 17 (Quality Assurance).

7.6.7.2.4 Bypasses—There are no bypasses used in the Emergency Pump 670-M-10 and 670-M-11 Hardwired Auto Start control circuitry.

7.6.7.2.5 Test and Calibration—Detailed operating and maintenance procedures have been prepared to ensure that the Emergency Pump 670-M-10 and 670-M-11 Hardwired Auto Start control circuitry is tested and calibrated correctly.

7.6.7.2.6 Maintenance—No online maintenance is permitted without administrative approval.

7.6.7.2.7 Readout Information—There is no readout information in the reactor control room. Flow information is provided by the flow indication switches.

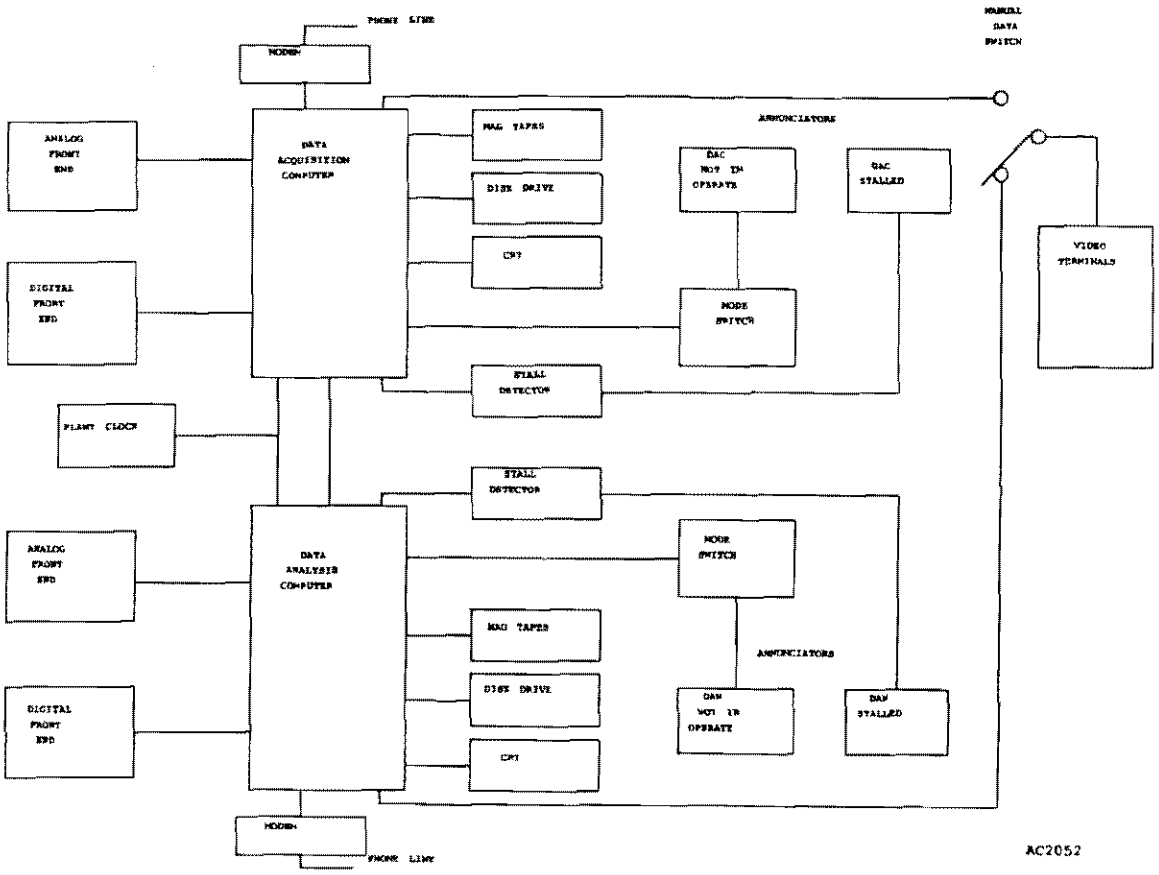

Figure 7.6-1. ATR Reactor Data System block diagram (simplified). **(For Information Only)**

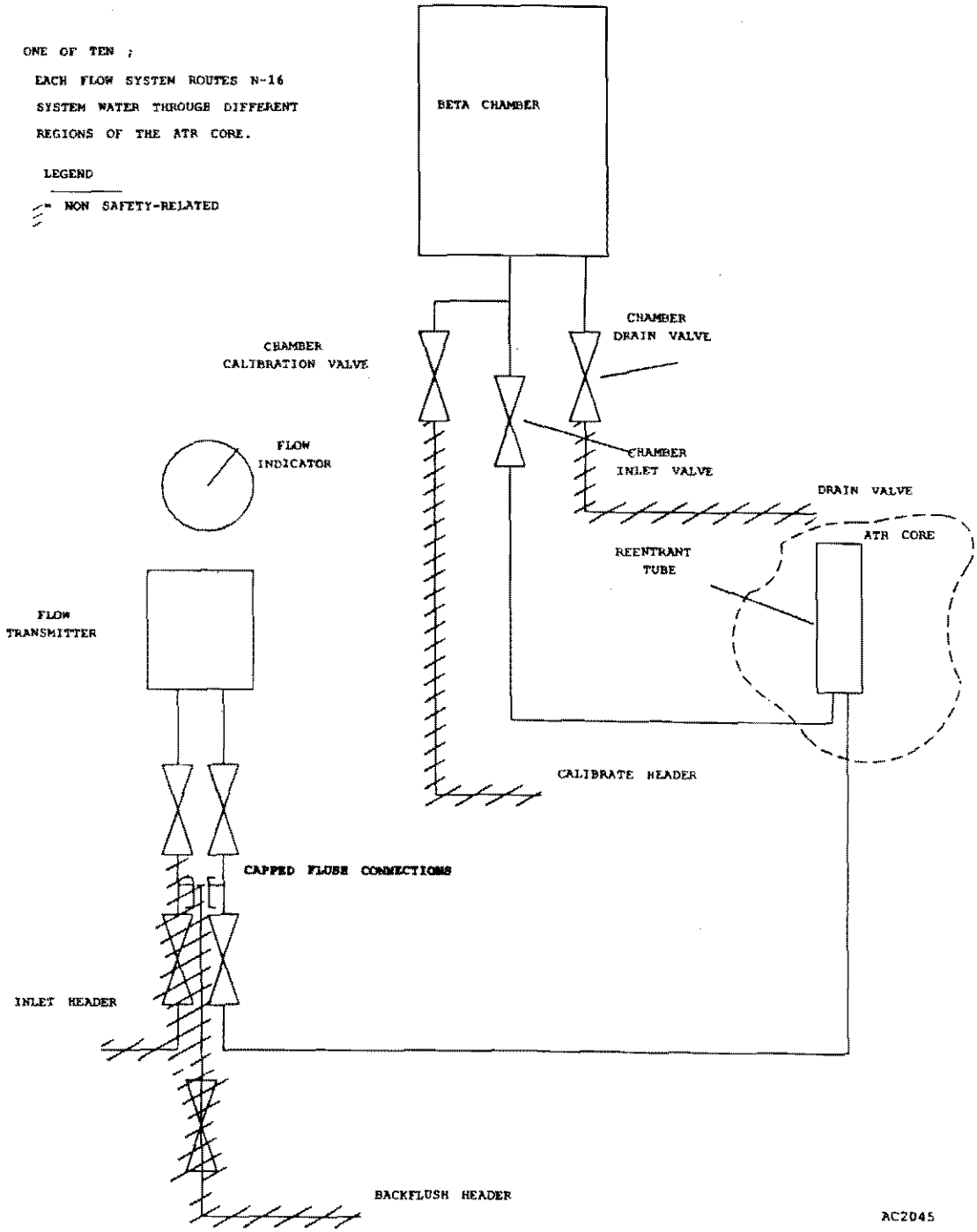

Figure 7.6-2. N-16 flow system (typical channel). **(For Information Only)**

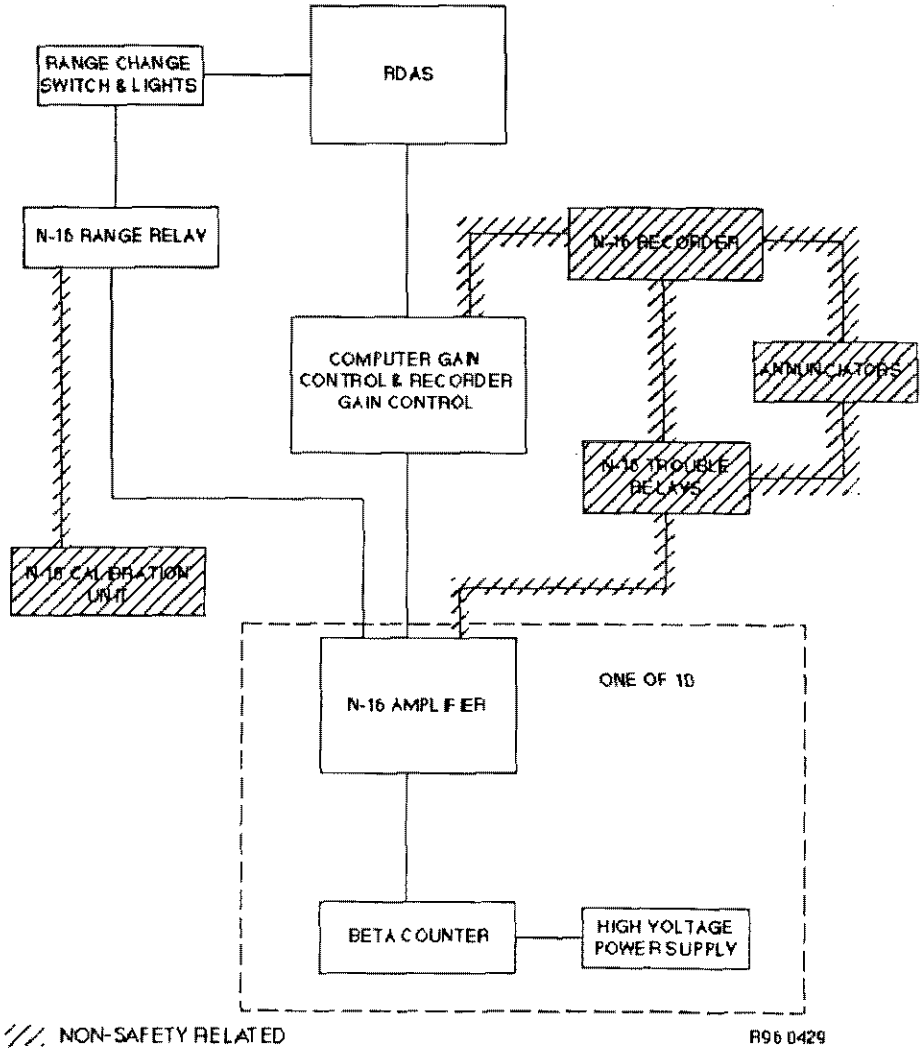

Figure 7.6-3. N-16 system block diagram. **(For Information Only)**

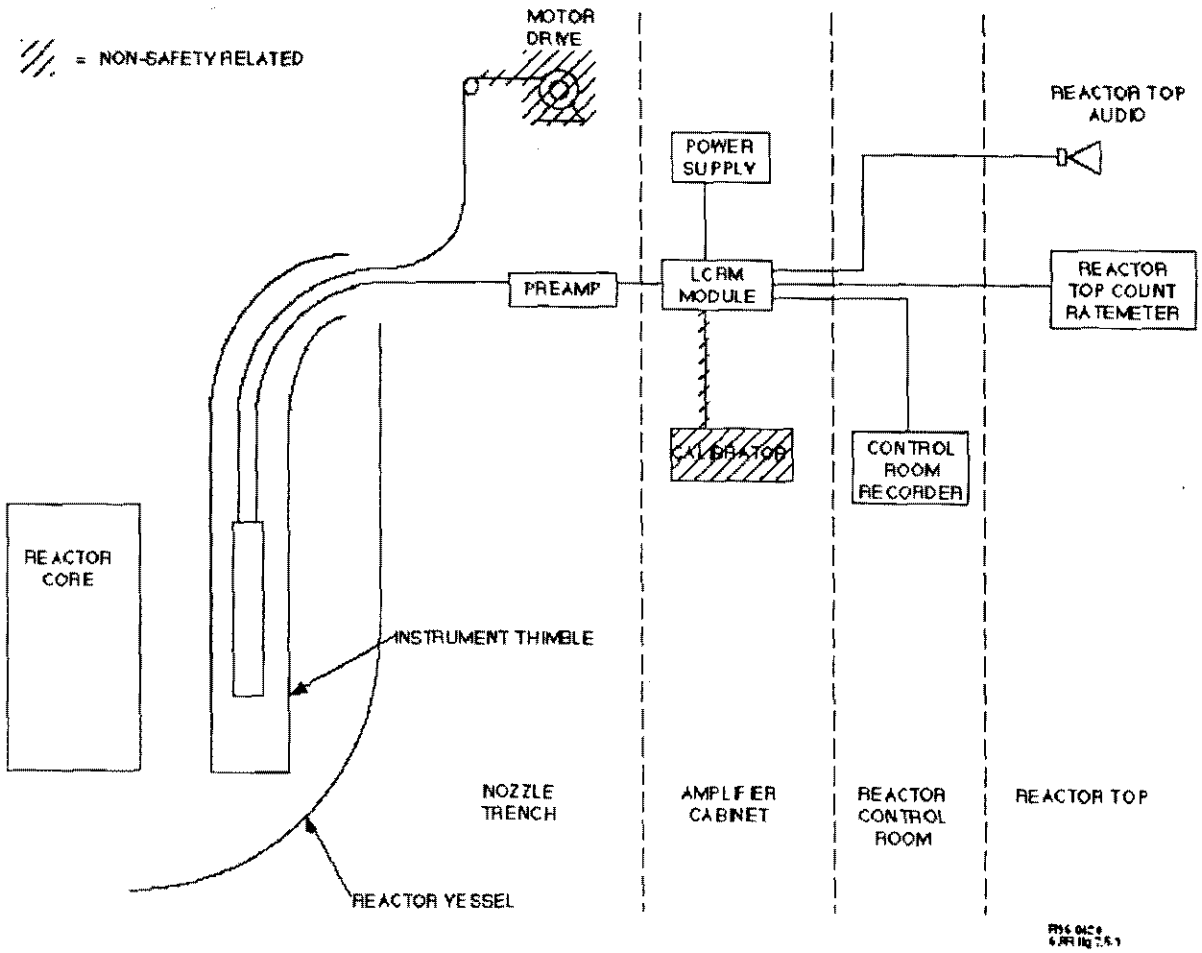

Figure 7.6-4. Log Count Rate System. **(For Information Only)**

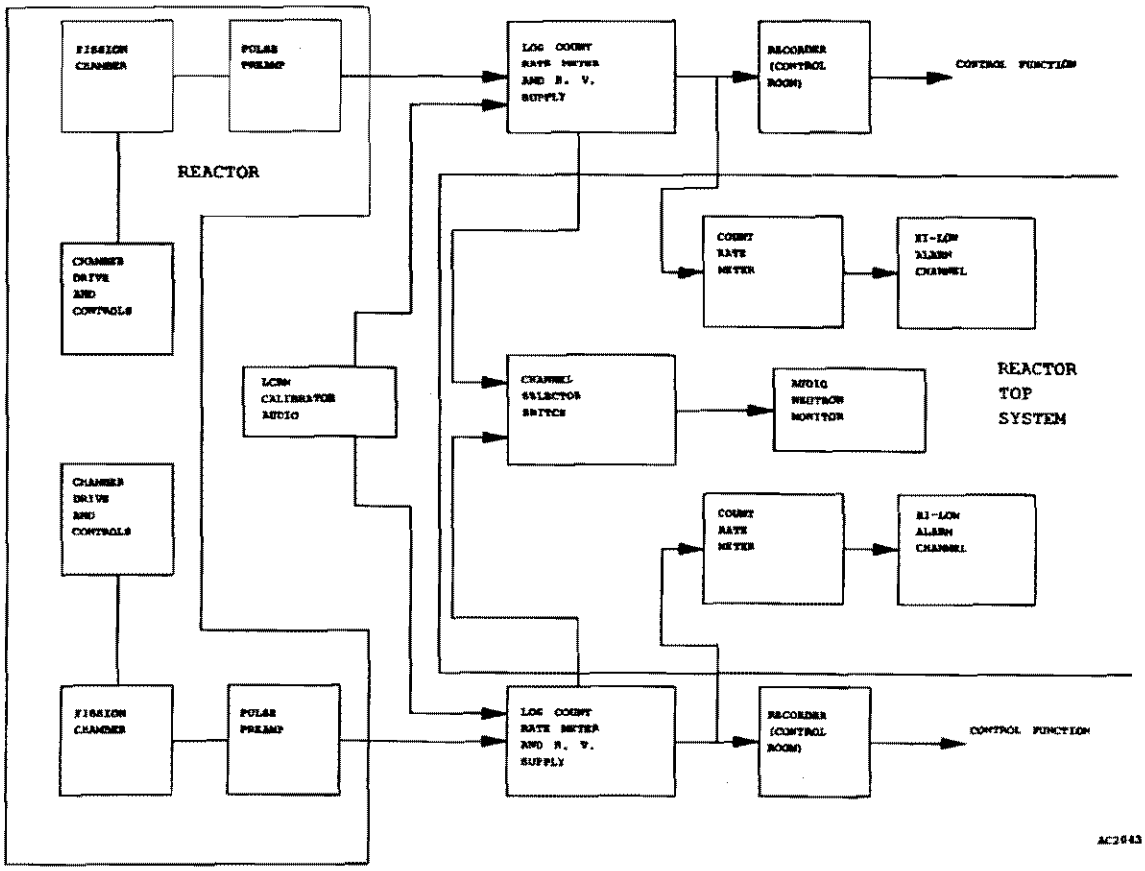

Figure 7.6-5. Log Count Rate System block diagram. **(For Information Only)**

7.7 Systems Not Required for Safety

This section includes a description of those instrumentation and control systems that are not required for safety. Instrumentation and control systems not required for safety are systems that are not relied upon in the safety analysis for mitigating design basis events. These systems include normal reactor control, process control (e.g., PCS temperature, mass flow rate, chemistry, and secondary coolant system flow rate), and the Surveillance and Test System.

7.7.1 Reactor Control

Control methods and the philosophy adopted for the design of the ATR instrumentation are based on providing a high integrity system capable of controlling the facility in a safe manner for all required modes of operation. The several unique design features of the ATR that improve experiment performance also influence the instrumentation design (deBoisblanc and Cohen 1965, Section VII-1). These features include:

- Flux trapping to peak the thermal flux in the experiment area and also to isolate the experiment from flux variation in the fuel region
- Undisturbed axial flux distribution caused by control rod motion during a cycle
- Lobe power shift and control capability during a cycle
- A large fraction of core neutrons retained by the reflector.

ATR reactor control is based on the capability of producing and maintaining a power shift among the various lobes and maintaining the reactor power level variation to less than ± 1/2% of full power throughout the cycle. The control system is designed to provide interlocks and graded corrective action to minimize safety system actions.

The ATR control system enables the operator to maintain the proper power level and power distribution among the core lobes. It can automatically compensate for average core reactivity changes due to fuel burnup, fission-product formation, depletion of burnable poison, and other sources of reactivity perturbation. Automatic control maintains reactor power variation to less than ± 1/2% of full power. Primary reactor control is achieved through hafnium control shims in the neck and reflector regions of the reactor core (deBoisblanc and Cohen 1965, Section VII-3).

7.7.1.1 Outer Shim Control Cylinder. The Outer Shim Control Cylinders (OSCCs) are used for reactivity shimming and flux shifting. These cylinders, operating in pairs, are manually selected and controlled by the reactor operator. These control elements may be operated as a group, containing any number of pairs from one to eight whenever the withdrawal permissives are met. All elements fully insert automatically after a 25 minute time delay following a scram. A reverse will insert all elements until the signal clears (deBoisblanc and Cohen 1965, Section VII-3). In addition to normal reactor control, the OSCC serves as a backup for reactor shutdown if the safety rods fail to insert. The OSCC is, therefore, a safety-related system. (See Section 7.4 for additional information.)

7.7.1.2 Neck Shim Control Rods. The neck shim rods provide for reactivity shimming and, to a lesser degree, flux shifting. Neck shim rods can be withdrawn only under manual control, either individually or as a group of any number, below 10^{-5} N_F. When the reactor is above 10^{-5} N_F, withdrawal is limited to one rod at a time. The neck shim control rods will fully insert automatically after a 25 minute time delay following a scram. A reverse will automatically insert the neck shims until the signal clears (deBoisblanc and Cohen 1965, Volume 1, Section VII-3).

7.7.1.3 Regulating Rod Servo Control System. The Regulating Rod Servo Control System is designed to maintain reactor power at any operator requested setpoint between 1% (N_L) and 100% (N_F). Automatic control is achieved with an ion chamber measuring reactor power, and a closed-loop control system that positions a regulating rod to maintain the desired power level. There are two complete, independent control channels: one is typically in standby to minimize downtime due to control system failures. Both Regulating Rod Servo Control System channels are designed to prevent uncontrolled reactor power increases in the event of drive motor/brake failure.

The Regulating Rod Servo Control System automatically regulates reactor power over long periods of time, and provides manual control of the two regulating rods. A basic block diagram of one channel of the control system is shown in Figure 7.7-1.

Manual control of the Regulating Rod Servo Control System is achieved by using an inner loop consisting of a synchro-based measurement of the Regulating Rod Servo Control System rod position through a synchro/digital converter, which then provides the basis for the controller to compute command data for the motor driver.

The two control channels are separate and independent. Each has its own controller, transducers, Regulating Rod Servo Control System, ac power sources, and other associated equipment. The channels are also physically separated to the extent practical, minimizing the likelihood of common mode failures. Should one channel fail, the event is annunciated and/or displayed to the operator, and a manual transfer to the remaining channel can be done rapidly and conveniently. Each controller has a substantial amount of online failure detection capability (EG&G Idaho 1984).

7.7.1.4 Control Power Reduction System. The ATR Control Power Reduction System (CPRS) consists of monitoring channel and actuating circuits, which provide control power reduction and alarms. These functions complement the capabilities of the Plant Protective System (PPS) and enhance the ability of the reactor operator to maintain reactor and plant conditions within desired limits without invoking PPS action.

See Figure 7.7-2 for a circuit diagram of the Control Power Reduction System.

7.7.1.4.1 Scrams—The ATR's normal shutdown procedure is either to use the manual scram or manual reverse depending on programmatic requirement. Automatic scrams occur from the ATR PPS. When an automatic scram occurs, the rod clutch coil controllers (RCCCs) release the safety rods and a signal from the RCCCs interfaces with the Control Power Reductions System which actuates rod permissive interlock functions. Scrams are reactor shutdowns caused by a release and drop of the safety rods. Unlike power reactors, scrams in the ATR do not cause any significant stress on reactor components, or any significant pressure or temperature disturbance.

7.7.1.4.2 Reverse—A reverse is the simultaneous, motor-driven insertion of all neck shim rods and OSCCs. Insertion of the shim rods will continue until the reverse signal clears or until the shim rods reach the inner (lower) limit. A reverse also causes the in-service regulating rod to revert to the MANUAL mode, but does not insert the regulating rod.

The following conditions can cause a reverse:

- Reverse timers (25 minutes after a scram if all safety rods are not fully withdrawn to their upper limit).
- X-Y bus undervoltage (Regulating rod stays in auto, the OSCCs and neck shims insert, no reverse annunciator).
- Five-second period.
- Loss of Permissive Bus (Key Off).
- Setback converts to reverse if reactor is < N_L or regulating rod is not in AUTO.
- Emergency reverse backup (Emergency buttons in Room 101).
- One or more neck shim rods off lower limit switches and simultaneously pulling a safety rod or outer shim cylinder shutdown test block.
- One or more safety rods off lower limit switches and simultaneously pulling a neck shim or outer shim cylinder shutdown test block.
- One or more outer shim cylinders off inner limit switches and simultaneously pulling a safety rod or neck shim rod shutdown test block.

7.7.1.4.3 Setback—A setback is the lowering of the servo control system power demand setpoint at a controlled rate. A slow setback will lower the power demand setpoint from N_F (full requested power) to 0.01 N_F in 480 seconds, while a fast setback takes only 90 seconds to reduce power.

The following conditions will cause a slow setback:

- Selected experiment parameters, such as, specimen temperature, inpile tube temperature difference, and inpile tube outlet temperature
- Inlet temperature (after 10 second time delay)
- Quadrant water power (which exceeds 1.1 N_F) (after 10 second time delay)
- Neutron level (which exceeds 1.07 N_F on the recorders) (after 10 second time delay)

7.7.1.5 Plant Control System Interlocks and Permissive Circuits. The reactor control circuitry is the link between the Reactor Operator and control mechanisms within the reactor. This circuitry performs the automatic control, safety, and interlock functions required by the design philosophy. The major features of ATR control design philosophy areas are as follows:

- The reactor will always be maintained in a safe condition. It is not allowed to begin startup until all necessary instruments are functioning properly.
- Moving any safety or shim rod in a direction that raises power requires deliberate conscious effort of the Reactor Operator.
- Instruments that initiate important power reductions are duplicated; that is, redundant circuitry is employed.
- If a power reduction is initiated, it will be allowed to continue until the cause is cleared. At the same time, all circuits that could interfere are locked out. This circuit design guarantees that power will be reduced whenever demanded.
- Three independent circuits are installed for each RSS/ESF signal.
- RSS/ESF instrumentation is used to increase reliability.
- The use of safety circuits for any function other than safety is forbidden.
- The control rod withdrawal speeds are chosen to ensure protection against a startup accident.
- Criticality will not be achieved during safety rod withdrawal until all safety rods are in their uppermost positions.
- The criterion for insuring against damage to the ATR involves preventing the hot spot in the fuel element from reaching within three standard deviations of the critical heat flux (CHF) or flow instability for normal operation and anticipated events.

Figures 7.7-3 through 7.7-6 are block diagrams of the ATR Control Permissive System. Figure 7.7-3 is an overall high-level logic diagram of the ATR Reactor Control Permissive System. This system comprises several systems, each one having a particular function. The following figures show each system within the ATR Reactor Control Permissive System in more detail:

Safety Rod Permissive System are shown in Figure 7.7-4.

Regulating Rod Permissive System are shown in Figure 7.7-5.

Neckshim Rod Permissive System are shown in Figure 7.7-6.

7.7.1.6 Analysis. The ATR is designed with a four-leaf clover arrangement of plate-type fuel elements in order to obtain flux traps for experiment irradiations. In addition, the ATR design incorporates a combination of revolving shim drums, Outer Shim Control Cylinders (OSCCs) outside the fueled area with the capability of providing different power levels for different parts of the core. Each lobe can have a different power within the control capabilities of the OSCCs and neck shim rods.

The coolant through the core is divided in the flow distribution tank into separate quadrants, one beneath each inner lobe. The center lobe coolant divides into each of the flow quadrants. Therefore, coolant temperature can be different in each outlet quadrant depending upon the lobe powers. Total reactor power is maintained at a desired value by the regulating rod. The distribution of the power between the lobes is controlled by the OSCCs and the neck shim rods.

The reactor can be shut down to a subcritical level by inserting the safety rods, which are fully withdrawn from the core before power operation. A trip signal to the safety rod subsystem releases the safety rods in 22 msec. The safety rods will drop 12 in. into the core and effectively terminate power operation within 150 msec (three-pump operation) or 170 msec (two-pump operation) after a trip signal.

The plant control system will prevent the reactor from operating in an undesirable condition. However, if an unsafe condition is reached, the reactor will be protected by the Reactor Shutdown System. The description and analysis of this protection is covered in Section 7.2. Worst case failure modes of the plant control systems are postulated in the analysis of off-design operational transients and accidents, which are covered in Chapter 15 (Accident Analyses).

7.7.2 Plant Control

Normal plant control is divided into two functions: reactor control and process control. Reactor control consists of controlling and monitoring the reactor power and power tilt or the azimuthal power distribution, also called power shift or division. Control is achieved through monitoring and controlling the safety rods, neck shims, regulating rods, and OSCCs. Reactor control is discussed in Section 7.7.1. Process control consist of controlling all plant processes excluding the experiment loops. Process control includes monitoring and controlling primary coolant pressure and flow rate, primary coolant pumps (on/off), emergency coolant pumps (on/off), primary coolant temperature, secondary coolant temperature and flow rate, and cooling tower fan speeds. Both reactor and plant processes are controlled from the reactor control room.

The major furnishings in the reactor control room are upright panels, the operator's console, and the shift manager's station. Mounted on the upright panels are annunciator panels and primary instrumentation required to control the reactor and to mitigate off-normal occurrences. Mounted on the console are the reactor controls, console display monitors, and the process control Distributed Control System (DCS) workstations. The shift supervisor's station has a DCS workstation and a display monitor with the same capabilities as the console display monitors. The console displays can display most information available on the upright panels plus access to the information collected and processed by the RDAS.

The DCS is a modularized integrated and distributed system that is the operators' primary interface with process control and monitoring. Any workstation can monitor and effect control of any plant process. Monitoring and control are accomplished through display screens such as menus and mimics. Operator interface to DCS is by means of a keyboard, a mouse, or a similar device. The DCS is a redundant system with multiple accesses and fully backed-up control processing units. The DCS control processing units are powered from an uninterruptible power supply. DCS also has a workstation in room 121; this workstation is generally used only to monitor processes. The DCS consists of two workstations: one powered by diesel-commercial, the other from an uninterruptible power supply.

7.7.3 Log-N Period

The safety related portion of the Log-N Period System is discussed in Section 7.6.4. The period portion of the Log-N Period System provides an indication of reactor periods from -30 seconds to +3 seconds. The period portion of the Log-N Period System does not perform a safety function.

7.7.4 Surveillance and Test System

The Plant Protective System (PPS) Surveillance and Test System (SATS) provides real-time, online testing, surveillance, and fault diagnosis of the PPS comparator or contact-to-logic level converter (CLLC) modules, two-out-of-three logic modules, division logic modules, the reactor mode selector switch position status, and the Rod Clutch Coil Controllers (RCCC) logic circuitry to ensure safe operation of the ATR. The SATS also performs a self diagnostic test. The surveillance and test functions are performed by the SATS in a real-time multiprogramming environment.

The SATS computer and remote terminal are located in a room adjacent to the four PPS rooms A, B, C, and D. The computer communicates with a PPS interface logic with electrical isolation devices.

The SATS and PPS are tested periodically to determine whether SATS and the PPS is operable; if not operable, faulty SATS cards or PPS modules are identified. The SATS injects programmed signals into the PPS logic and monitors the PPS response to the stimuli. The testing is initiated in a fashion that protective function trips are verified to be operational but will not cause a reactor trip or protective function. This allows testing during reactor operations. (See Sections 7.2 and 7.3 for points of injection.) In addition, upon request, the SATS monitors PPS status to observe actual levels and logic states, temporarily storing the values of all monitored parameters. Manual transfer of data may be initiated by operator demand as desired.

SATS performs the following tests:

- Initial Status Tests—These tests determine which mode the reactor is operating in and run self-tests to ensure SATS is operating properly. Initial analog data is also collected and stored from PPS for other tests performed. Interchannel comparison checks are done.
- Instrument Subsystem Tests—These tests check the analog comparator trip points and the operability of both the analog comparator and the contact to logic level converter (CLLCs). The tests also ensure that when a channel trip is actuated, it is seen by all two-out-of-three logic modules.
- Logic Tests—These tests check all combinations of trip/resets to the two-out-of-three logic modules, division logic modules, and the Rod Clutch Coil Controller amplifiers to ensure proper operation.
- Final Status Tests—Similar to the initial status test, these tests also perform initial and final data comparisons to ensure that tolerances are within specifications.
- Test Result Display—This display confirms that no PPS or SATS errors were detected; or if a problem was detected, it identifies the problem area.
- Manual Testing—Should the auto sequence become inoperative, manual checks of the PPS can be performed.

The SATS testing does not inhibit the ability of the PPS to respond to an event that requires reactor shutdown, nor does it contribute to the initiation of reactor shutdown. This includes partial or total loss of SATS power, loss of any or all signals within SATS, or disconnection of any or all SATS interconnection cables. The PPS logic and the interface logic between the PPS and the SATS remote terminal have been designed to meet these design requirements. The SATS remote terminal, operating software, and user-written test procedures will not decrease PPS functional integrity.

7.7.4.1 Analysis. The SATS is not safety-related because its essential surveillance functions can be done manually.

7.7.5 In-Vessel Post Accident Monitoring System

The ATR In-Vessel Post Accident Monitoring System (IVPAMS) is designed to monitor and log data from selected plant parameters and display this information in the TRA Emergency Command Center (ECC) for use by the TRA Emergency Response Team. The selected parameters are:

- Primary Coolant System Emergency Flow
- Emergency Firewater Injection Flow
- Building Water Level-Piping System
- Building Water Level-Heat Exchange Room
- Canal Water Level
- Primary coolant Level
- Reactor Power, Log-N
- Primary Coolant System Inlet Pressure
- Primary Coolant System Outlet Pressure
- Level Probe Heater Current
- Level Probe Heater Voltage
- Safety Relief Valve Lower Drain Temperature
- Safety Relief Valve SF-A-71 Outlet Temperature
- Safety Relief Valve SF-A-72 Outlet Temperature
- Safety Relief Valve Ambient Temperature
- Reactor Vessel Upper Plenum Temperature.

The individual IVPAMS instruments provide input to the Data Acquisition and Display System and are located within the ATR confinement boundary. These instruments are designed to be able to remain operable and to withstand plant accident environmental conditions during and for 72 hours following an accident. Besides remaining operable during possible reactor accidents, the instruments are designed and installed to withstand a Safe Shutdown Earthquake.

The IVPAMS Data Acquisition and Display System is located outside the ATR confinement boundary and consists of the main data acquisition and display located in the Counting Room of TRA-670 and a network display and data storage installed in the ECC (TRA-680). The system gathers, stores, and displays data needed to analyze plant conditions. The system operates independent of action in the reactor control room and plant functions. The IVPAMS Data Acquisition and Display System is designed for reliability but does not meet single failure or seismic qualification requirements. The system utilizes electrical isolation devices for any signals coming from existing plant instrumentation. The system is designed so that circuit transients or power failures and fluctuations will not cause any stored data vital to the IVPAMS functions to be lost. A backup power source and uninterruptible power supply (UPS) maintains continuity of the IVPAMS functions should the loss of primary power occur.

7.7.6 Neutron Level Channel No. 8

The southwest neutron level channel No. 8 (Non-PPS) provides monitoring of neutron flux over a reactor power range of 10^{-4} to 1.5 N_F. This channel monitors the southwest lobe and has three ranges. The channel incorporates an adjustable intermediate gain step with a minimum gain range of 1 to 2 nominal full power. This intermediate gain step will be initiated following a power reduction to the range change used setpoint while operating in the nominal full-power range. The neutron level channel incorporates a 100 gain step (100 times normal full power gain) used for depressurized operation. This 100 gain change for depressurized operation is accomplished by the PPS Channel C mode select switch when placed in the DEPRESSURIZED position. The NORMAL and INTERMEDIATE range is displayed by indicator lights in the reactor control room.

The southwest neutron level channel No. 8 does not perform a safety-related function, but has a slow set back protective function.

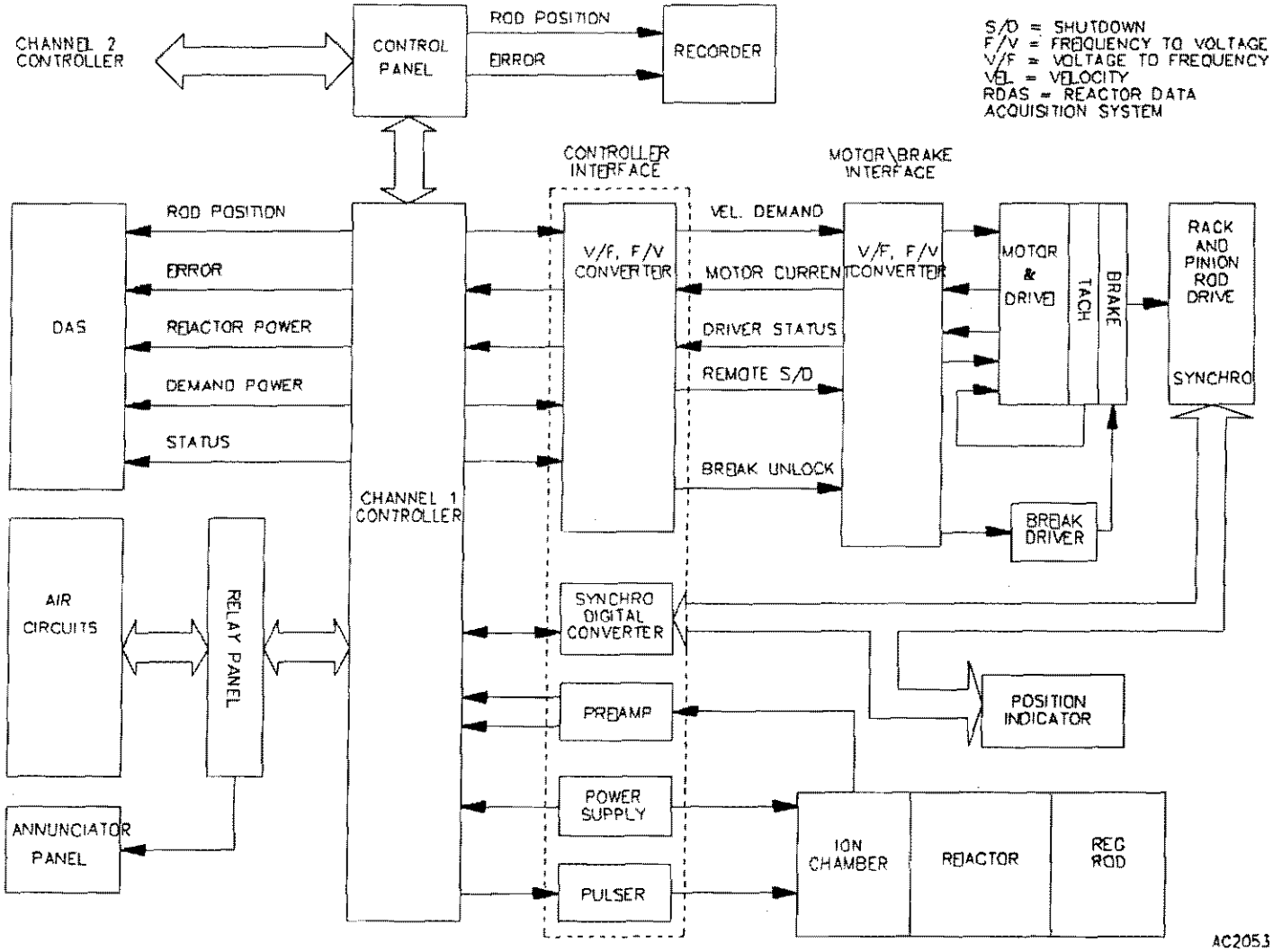

Figure 7.7-1. Regulating Rod Servo Control System. **(For Information Only)**

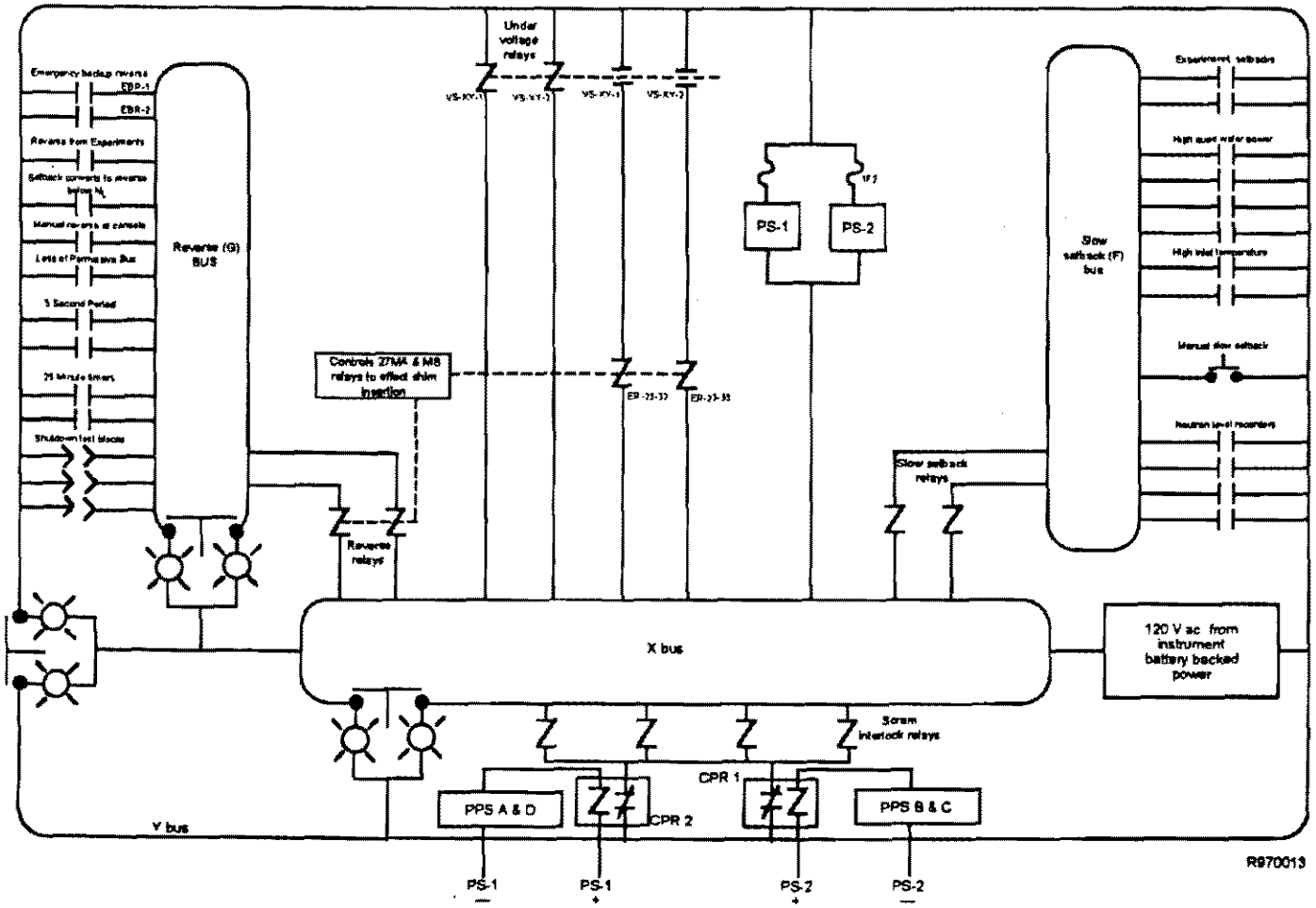

Figure 7.7-2. Control Power Reduction System. **(For Information Only)**

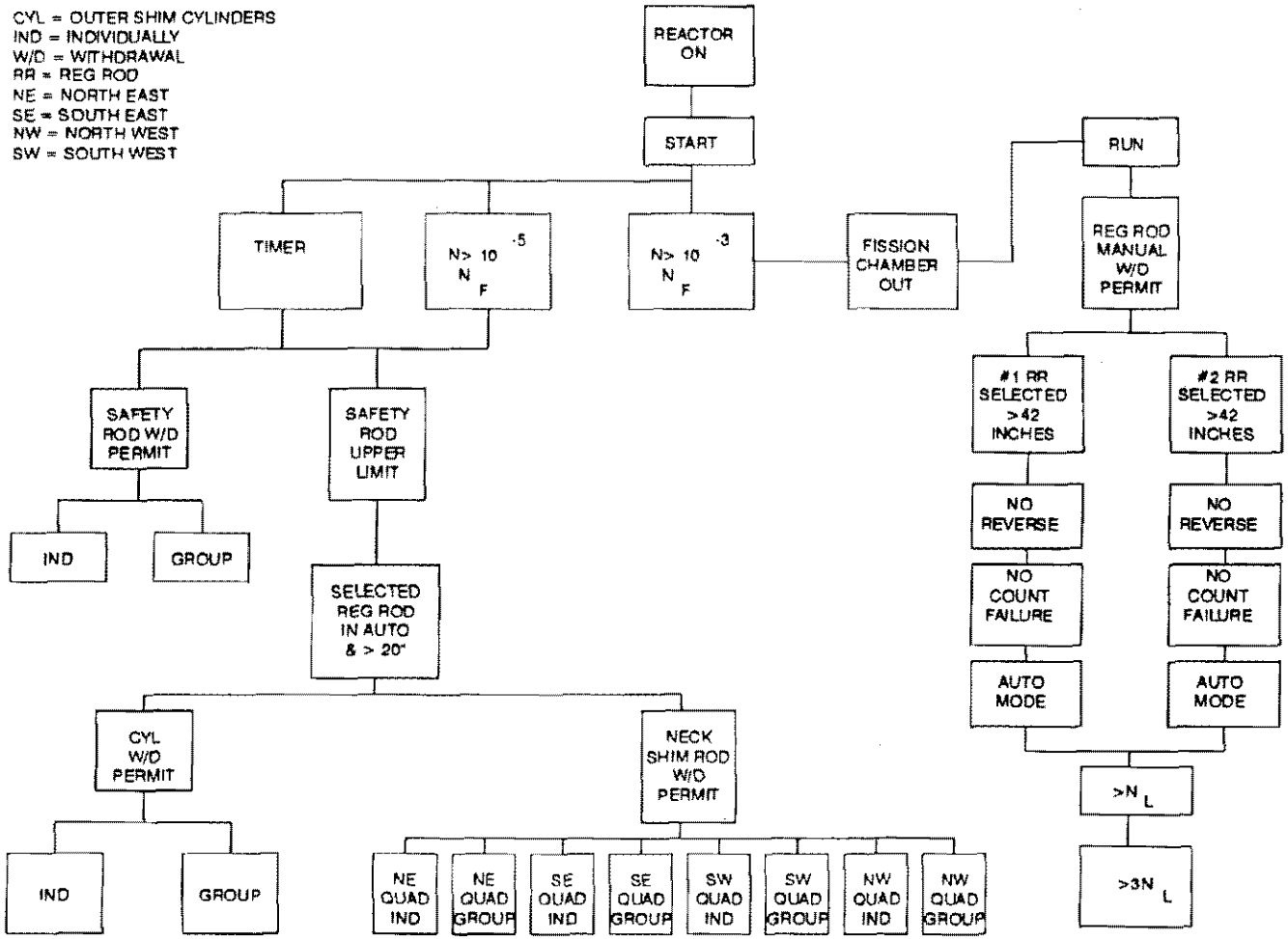

Figure 7.7-3. ATR Reactor Control Permissive System. **(For Information Only)**

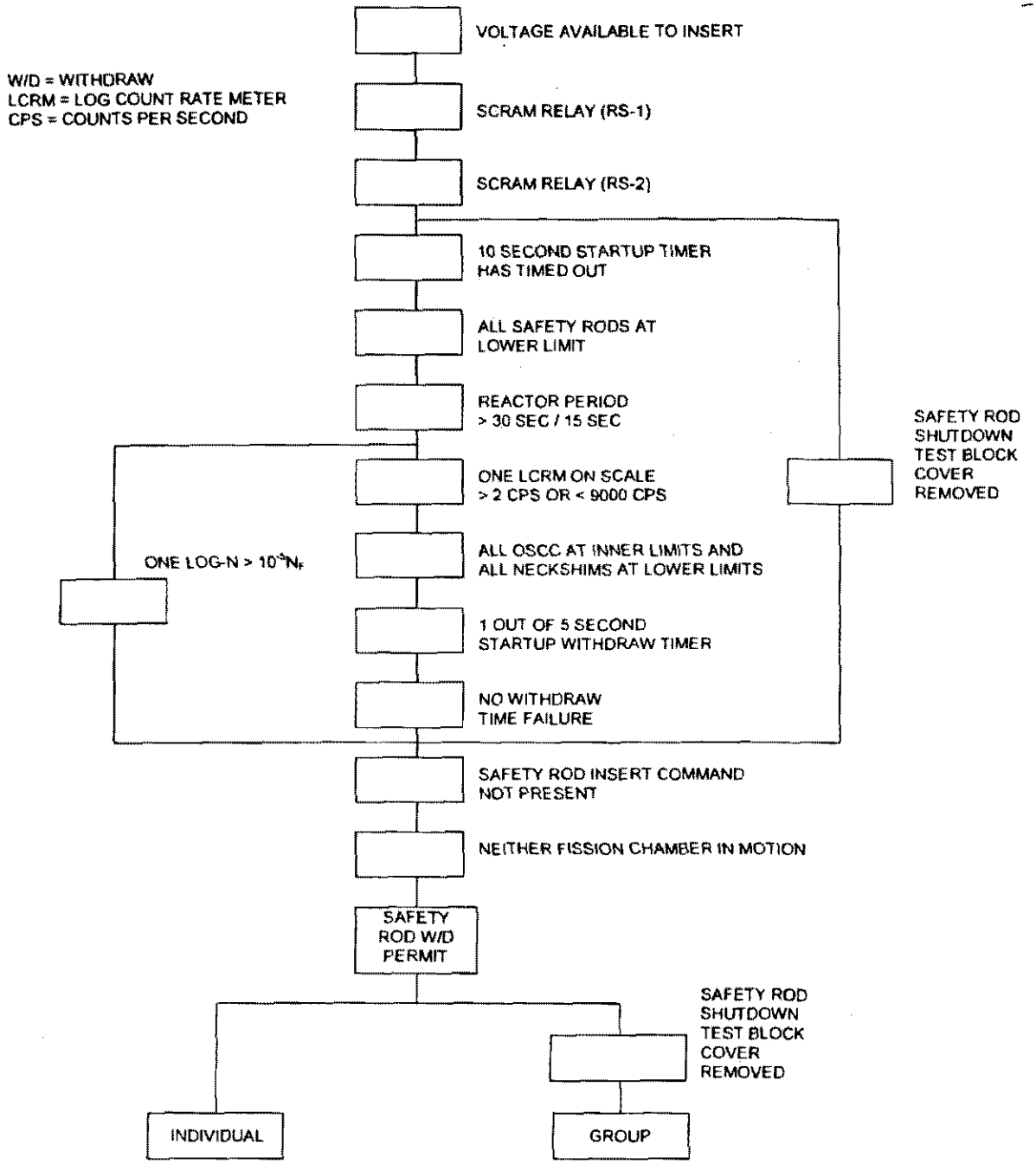

Figure 7.7-4. ATR Safety Rod Permissive System. **(For Information Only)**

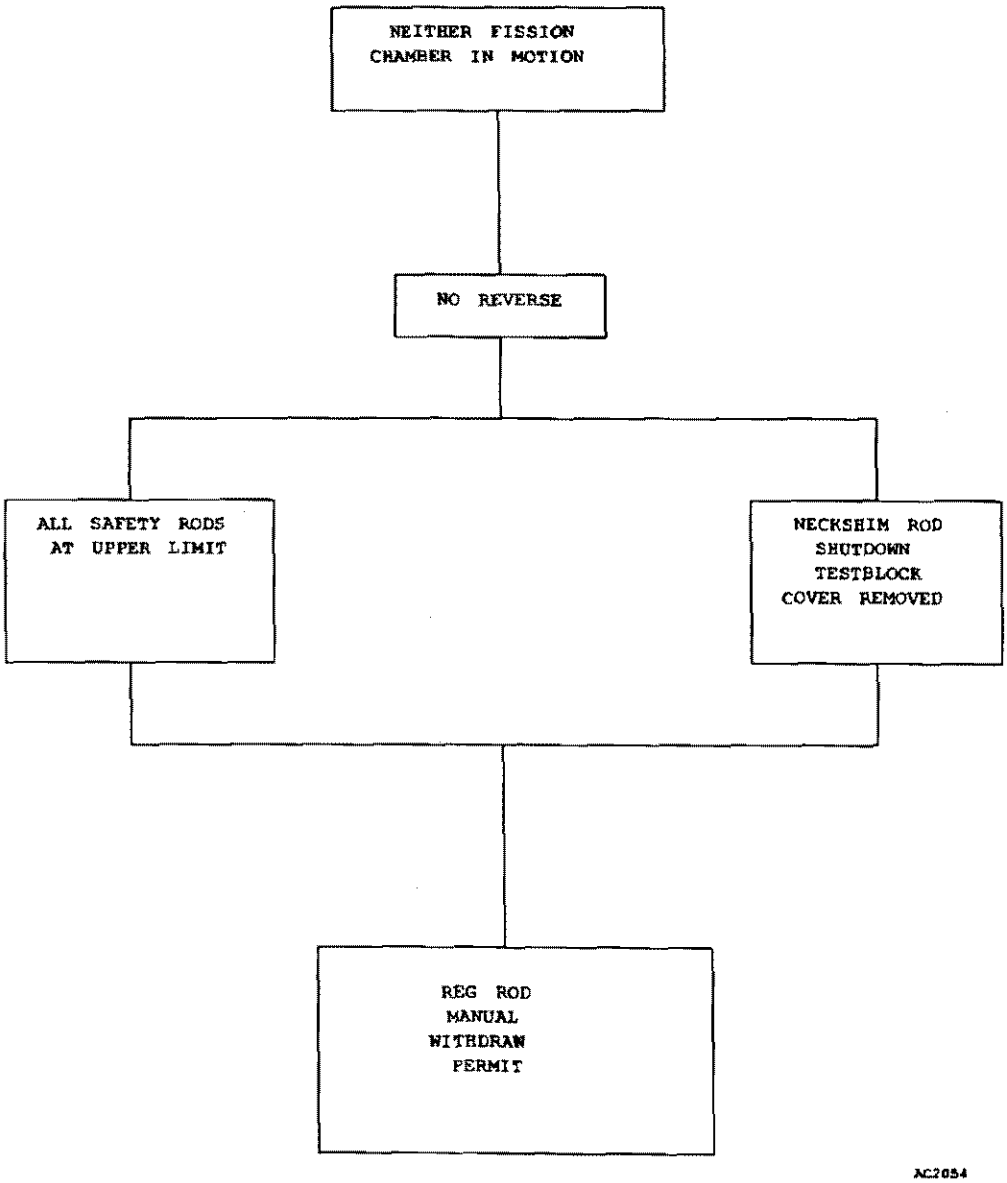

Figure 7.7-5. Regulating Rod Permissive System. **(For Information Only)**

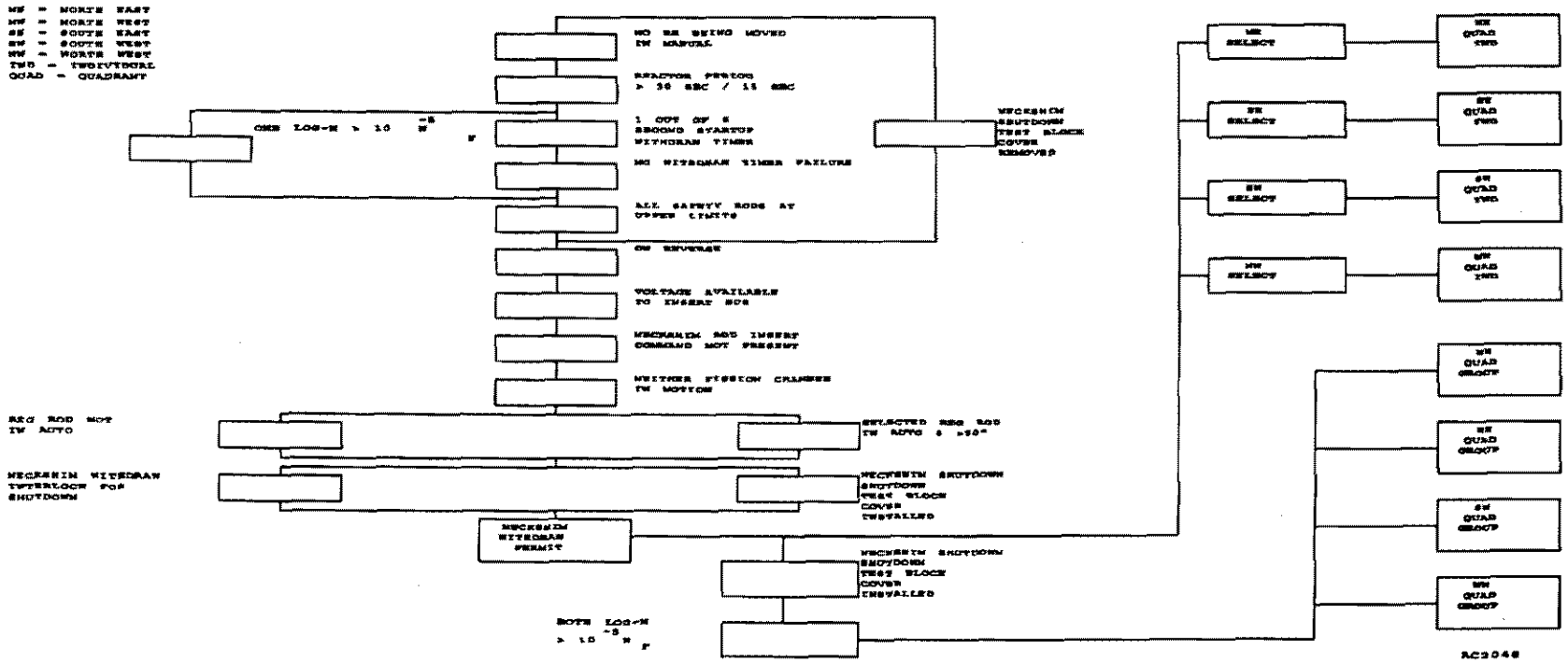

Figure 7.7-6. ATR Neck Shim Rod Permissive System. **(For Information Only)**

7.8 References

Atkinson, S. A., 1994, *A Limiting Control Setting for the ATR Period Trip with the Wide Range PPS*, EDF TRA-ATR-1024, LITCO, October 27, 1994.

Atkinson, S. A. and R. T. McCracken, 1997, *Advanced Test Reactor Lobe Power Uncertainty*, EDF TRA-ATR-1211, Rev. 1, LMITCO, March 13, 1997.

Companywide Manual, *Operations*, with Reactor Programs supplemental procedures.

deBoisblanc, D. R., and S. Cohen, 1965, *Safety Analysis Report Advanced Test Reactor*, Vol. 1, Sections VII-1 and -3, IDO-17021, Phillips Petroleum Company, April 1965.

EG&G Idaho, 1977a, *Emergency Pumps Recirculation Flow Relay Cabinet*, Specification ES-50228 A, September 30, 1977.

EG&G Idaho, 1977b, *Wide Range Neutron Subsystem for the ATR Control System Upgrade*, Specification ES-70126 A, September 30, 1977.

EG&G Idaho, 1977c, *Neutron Level Monitor for the ATR Control System Upgrade*, Specification ES-50204 A, September 30, 1977.

EG&G Idaho, 1977d, *Surveillance and Test System for the ATR Control System Upgrade*, Specification ES-70125, September 30, 1977.

EG&G Idaho, 1978, *Emergency Pumps Recirculation Flow Logic Module for the ATR Control System Upgrade*, Specification ANC 50229 B, December 7, 1978.

EG&G Idaho, 1983, *Control Power Reduction System, System Design Description for ATR Reactor Controls and Monitors (Non PPS)*, SDD-7.6.13, February 16, 1983.

EG&G Idaho, 1984, *ATR Regulator Rod Servo Control System, System Design Description for ATR Reactor Controls and Monitors (Non PPS)*, SDD-7.6.8, July 18, 1984.

EG&G Idaho, 1986, *ATR Stack Exhaust Radiation Monitoring Subsystem of the Containment Isolation System, System Design Description for the ATR Plant Protection System (PPS)*, SDD-7.7.4, February 14, 1986.

EG&G Idaho, 1988, *ATR Vessel Vent System, System Design Description for the ATR Reactor Vessel System*, SDD-7.1.6, September 30, 1988.

EG&G Idaho, 1990, *Analog Buffer Unit for the ATR Control System Upgrade*, Specification ES-50206, Revision C, January 11, 1990.

EG&G Idaho, 1994, *ATR PPS and Technical Specifications Design Basis Report*, (SAR-39), Issue 030, EG&G Idaho, Inc. August 2, 1994.

Eide, S. A., S. T. Khericha, and T. A. Thatcher, 1991, *Advanced Test Reactor Probabilistic Risk Assessment*, EGG-PRP-8823, Rev. 1, EG&G Idaho, Inc., September 1991.

Golden, R. W., 1988, *ATR Vent Valve System Failure Mode and Effects Analysis (FMEA) and Single Failure Analysis*, EDF PRPTS-ATR-234, Rev. 1, EG&G Idaho, Inc., March 23, 1988.

Gorman, V. W., 1999, *Seismic Analysis for the Mounting Bolts for the LOCA ESF Pump Shutoff Timer/Relay Hoffman Enclosures*, EDF TRA-ATR-1496, Rev. 0, LMITCO, September 23, 1999.

INEEL, 2000, *ATR Reactor Shutdown System, System Design Description for the ATR Plant Protection System (PPS)*, SDD-7.7.2, October 5, 2000.

INEEL, 2003, *ATR Emergency Firewater Injection System, System Design Description for the ATR Plant Protection System (PPS)*, SDD-7.7.1, Rev. 3, December 8, 2003.

Pafford, D. J., 1994, *RELAP5 Analysis of the Loss of Heat Sink Transient for the Advanced Test Reactor Updated Final Safety Analysis Report*, EDF TRA-ATR-846, EG&G Idaho, Inc., June 23, 1994.

Phillips Petroleum, 1965, *Advanced Test Reactor Design and Operation*, IDO-16871-5, Volume 5 in *Fundamentals In the Operation of Nuclear Test Reactors*, Phillips Petroleum Co., Idaho Falls, Idaho, November 1965.

Richins, W. D., et al., 1999, *Seismic Qualification Testing of ATR LOCA Electrical Hardware*, EDF TRA-ATR-1515, LMITCO, September 13, 1999.

Thatcher, T. A., 1997, *ATR CLOFA Frequency Analysis With Proposed Hardwired Autostart Features*, EDF TRA-ATR-1229, LMITCO, March 27, 1997.

Thatcher, T. A., 1999, *ATR LOCA ESF Pump Shutoff Modification Failure Analysis*, EDF TRA-ATR-1471, LMITCO, July 27, 1999.

Thatcher, T.A., 2000a, *Evaluation of ATR Safety-Related & Risk Significant Equipment Location Dependent Vulnerability*, EDF TRA-ATR-1564, September 2000.

Thatcher, T.A., 2000b, *Comparison of Postulated Fire Events in the ATR Building*, EDF TRA-ATR-1610 November 16, 2000.

Thatcher, T. A., et al., 1994, Update to the Advanced Test Reactor Probabilistic Risk Assessment (Level 1, 2, and 3 Including Shutdown Operations), EGG-PRP-11229, EG&G Idaho Inc., May 1994.

INTENTIONALLY BLANK

CHAPTER 8

ELECTRIC POWER

INTENTIONALLY BLANK

CONTENTS

ACRONYMS/ABBREVIATIONS 8-4

8. ELECTRIC POWER 8-6

8.1 Introduction 8-7

8.1.1 Commercial Power 8-7
8.1.2 Diesel Power 8-8
8.1.3 Diesel-Commercial Power 8-8
8.1.4 Non-PPS Battery-Backed Power Systems 8-8
8.1.5 32-Vdc PPS Battery-Backed Power System 8-9
8.1.6 Safety-Related Loads 8-9
8.1.7 Design Bases 8-10
8.1.8 Design Criteria, Regulatory Guides, Codes, and Standards 8-10
8.1.9 Redundant, Diverse, and Independent Features 8-11
8.1.10 Analysis 8-12

8.2 Commercial Power Systems 8-16

8.2.1 Description 8-16
8.2.2 Analysis 8-16

8.3 Diesel and Battery-Backed Power Systems 8-18

8.3.1 AC Power Systems 8-18
8.3.2 DC Power Systems 8-22

8.4 References 8-27

FIGURES

8.1-1. Simplified diagram of commercial power distribution 8-15

8.2-1. Simplified diagram of the AC power systems 8-17

8.3-1. Battery-Backed Power Utility and Instrument Systems 8-25

8.3-2. Simplified diagram of the 32 Vdc Plant Protective System power distribution system 8-26

TABLES

8.1-1. Instrument battery-backed power system design loads 8-13

8.1-2. Utility battery-backed system design loads 8-14

8.1-3. PPS design loads 8-14

ACRONYMS/ABBREVIATIONS

ac	alternating current
AEC	U.S. Atomic Energy Commission
ASME	American Society of Mechanical Engineers
ATR	Advanced Test Reactor
BBP	battery-backed power
CFA	Central Facilities Area
CFR	Code of Federal Regulations
dc	direct current
EBR-II	Experimental Breeder Reactor II
EFIS	emergency firewater injection system
ESF	engineered safety features
ETR	Engineering Test Reactor
GDC	general design criterion
hp	horsepower
IEEE	Institute of Electrical and Electronics Engineers
INEEL	Idaho National Engineering and Environmental Laboratory
INTEC	Idaho Nuclear Technology and Engineering Center
kV	kilovolt
kVA	kilovolt-ampere
kW	kilowatt
MCC	motor control center
MTR	Materials Test Reactor
NEC	National Electrical Code
NFPA	National Fire Protection Association
NRF	Naval Reactors Facility
OSCC	outer shim control cylinder
PBF	Power Burst Facility
PPS	plant protective system
RDAS	reactor data acquisition system
RMSS	radiation monitoring and seal system
RSS	reactor shutdown system
SDD	system design description
SSE	safe shutdown earthquake

TAN	Test Area North
TRA	Test Reactor Area
UFSAR	Upgraded Final Safety Analysis Report
UPS	uninterruptible power supply
V	Volt
Vac	volt, alternating current
Vdc	volt, direct current
VVS	vessel vent system
W	watt

INTENTIONALLY BLANK

8. ELECTRIC POWER

8.1 Introduction

The Advanced Test Reactor (ATR) electric power distribution system is designed to provide at least two power sources to equipment important for operation and orderly shutdown of the plant. During reactor operation, ac power for electrical loads is provided by diverse offsite commercial power and onsite diesel generator power sources.

The TRA offsite and a majority of the TRA onsite power sources are not safety-related. The TRA onsite safety-related power sources are the Battery-Backed Power (BBP) Systems, part of the Diesel system, and part of the Diesel-Commercial system. Normal power sources to safety-related electrical loads are backed up by either battery-backed uninterruptible power supplies (UPS) or a diesel generator.

The ATR power-distribution system consists of eight systems which can be divided into three non-safety-related power sources and five safety-related power sources:

NON-SAFETY-RELATED POWER SOURCES

1. Commercial power (4,160/480/208/120-Vac buses)
2. Diesel power (4160/48[a]/208/120-Vac buses)
3. Diesel-commercial power (480/208[a]/120-Vac buses)

SAFETY-RELATED POWER SOURCES

4. Battery-backed 250-Vdc and 208/120-Vac power (instrument)
5. Battery-backed 250-Vdc and 208/120-Vac power (utility)
6. Battery-backed 32-Vdc power [Plant Protective System (PPS)].
7. Diesel power (4160/480-Vac bus)[a]
8. Diesel-commercial power (480-Vac bus)[a]

8.1.1 Commercial Power

Commercial electric power for the Idaho National Engineering and Environmental Laboratory (INEEL) is supplied from the Northwest Power Pool. Three 230-kV lines, one each from Utah Power and Light Company, Montana Power and Light Corporation, and Idaho Power Company, feed into the Antelope Substation near the Central Facilities Area (CFA). Transformers in the Antelope Substation change the voltage level from 230-kV to 138-kV used at the INEEL. From the Antelope Substation, two 138-kV lines feed into the Scoville Substation located at CFA. From the Scoville Substation, a 138-kV loop is used to furnish power to the INEEL substations. The 138-kV loop from the Scoville Substation extends to the Idaho Nuclear Technology and Engineering Center (INTEC), Test Reactor Area (TRA), Naval Reactors Facility (NRF), Test Area North (TAN), Experimental Breeder Reactor II (EBR-II), and Power Burst Facility (PBF) substations, and then returns to Scoville.

---

[a]. For the safety related parts of these systems, see Chapter 3A.

At the TRA Substation, 138-kV is reduced to 13.8-kV for distribution to the Advanced Test Reactor (ATR) and the Engineering Test Reactor (ETR). The 13.8-kV commercial power is supplied to ATR and ETR from two 20,000-kVA 138/13.8-kV transformers. Attached to the secondary (13.8-kVac side) of these two transformers are four power feeds, two for ATR and two for ETR. Figure 8.1-1 shows a simplified diagram of the commercial power distribution from the TRA Substation to the ATR and ETR commercial power buses.

From the two sets of 13.8-kV switchgear, power is supplied to the primary side of 13.8/4.16-kVac transformers. The 4,160-Vac system supplies power to two power buses (A and B) which provide the onsite commercial power for ATR. For the majority of the plant systems which operate on 480-Vac, 208-Vac, or 120-Vac, there are three transformers that change the 4160-Vac to 480-Vac to supply various motor control centers (MCC). These 480-Vac MCCs supply power for motors rated at less than 125 hp; to other MCCs; and to experiments power panels. From the 480-Vac MCC, power is distributed to lighting and other transformers, which reduce the voltage to 208/120-Vac

8.1.2 Diesel Power

Diesel power is provided by one of three 1,500 kW diesel generators. One diesel generator provides power to a 4,160-Vac diesel bus during reactor operation and for a limited time (that is, until the required fuel element cooling time is satisfied) following reactor shutdown. The auto-start diesel generator (674-M-6) is normally in the standby mode (if not supplying the diesel bus) and will automatically start if normal power to the diesel-powered bus is lost. The remaining diesel generator can either be placed in standby or taken off-line for maintenance, depending on operating needs. The diesel power system allows an orderly shutdown of the ATR facility in the event of a loss of commercial power. The use of a running diesel generator differs from most commercial nuclear power plants, where the diesel generators are kept in standby and must start under emergency conditions.

8.1.3 Diesel-Commercial Power

The diesel-commercial MCC can be energized from either the 480-Vac diesel bus (670-E-9) or the 480-Vac commercial bus B (670-E-7). If a power outage should occur, the selected source of power will automatically be transferred to the alternate source. When the selected power source is restored, the MCC will automatically be transferred back to the selected bus.

The purpose of the diesel-commercial system is to have a reliable source of 480-Vac and 208/120-Vac power for certain important plant loads, including the normal power source for a portion of the PPS, outer shim control cylinder (OSCC) drives, and emergency pump 670-M-10.

8.1.4 Non-PPS Battery-Backed Power Systems

The non-PPS battery-backed power (BBP) systems are the instrument BBP system and the utility BBP system. The function of these BBP systems is to supply uninterruptible power to selected dc and ac loads. Both BBP systems are similar in design and are composed of four major components:
(a) uninterruptible power supply (UPS), (b) dc power control center panel, (c) battery bank, and (d) an ac power panel. Both BBP systems are supported by a reserve ac power system, a local display panel, and a common, shared backup battery charger. The BBP systems are relied upon to supply power to certain safety-related systems and components in the event of loss of the normal power sources.

Commercial 480-Vac power feeds the UPS. A rectifier in the UPS converts the 480-Vac to 250-Vdc, which is distributed to the dc power control center and to an inverter in the UPS. The inverter converts the 250-Vdc to 208/120-Vac, which is the output to the ac power panel. The dc power supplied to the dc power control center is distributed to the dc loads and maintains a charge on the battery banks.

The BBP systems each have two power inputs. The primary input from commercial by 670-E-7 (utility) and commercial bus 670-E-11 (instrument) powers an ac to dc power converter which provides power to dc power control center panels (670-E-23 utility and 670-E-26 instrument). The second input is connected to the reserve power input of the UPS. The reserve power for the utility UPS comes from diesel bus 670-E-9. The utility UPS provides the reserve power for the instrument UPS. Both the instrument and utility UPS have circuit breakers that connect this reserve power source directly to the UPS 208/120-Vac output bypassing the internal UPS static switch.

8.1.5 32-Vdc PPS Battery-Backed Power System

The PPS battery-backed power system supplies uninterruptible 32-Vdc for the PPS instrumentation and controls. The PPS BBP system is composed of four separate and isolated systems, each system (consisting of a battery charger, a battery, and a distribution panel), supplying 32-Vdc power to (a) the various instrument channels and logic equipment composing the Reactor Shutdown System (RSS), and (b) to actuation systems for the Engineered Safety Features (ESF). The PPS BBP is supplied power from 480-Vac MCCs through 480/120-Vac transformers and battery chargers. The charge on the battery banks is continuously maintained. The PPS BBP system supplies 32-Vdc power to safety-related systems.

8.1.6 Safety-Related Loads

The BBP instrument and utility system loads are listed in Tables 8.1-1 and 8.1-2. The safety-related loads are denoted in each table. The BBP instrument and utility systems supply the power required (a) to support shut down of the ATR and (b) to remove the decay heat.

The PPS BBP distribution panels supply power to the various instrument channels and logic equipment composing the RSS, and to actuation systems for the ESF. The PPS BBP system loads are listed in Table 8.1-3. All of the PPS BBP electrical loads are safety-related.

The analysis of the low flow events in the updated accident analysis requires the operation of one emergency pump (either 670-M-10 or 670-M-11) for at least 30 minutes following power operation if operation of the primary pumps is lost. The emergency pumps 670-M-10 and 670-M-11 and their associated power supplies are safety-related.

The utility BBP system provides the safety-related power for 670-M-11 emergency pump via 250 volt dc power control panel 670-E-23. The power supplied from the 674-M-6 diesel to the 670-M-10 emergency pump is safety-related.

The master list of safety-related equipment is in UFSAR Chapter 3 (Design of Structures, Components, Equipment, and Systems).

8.1.7 Design Bases

The safety-related functional requirement for the 670-M-10 and 670-M-11 power sources, the instrument and the utility BBP systems, and PPS BBP system is to supply uninterruptible power to their safety-related electrical loads until the safety function of the load is no longer required. The battery-backed safety-related electrical loads are listed in Tables 8.1-1, 8.1-2, and 8.1-3.

8.1.8 Design Criteria, Regulatory Guides, Codes, and Standards

8.1.8.1 General Design Criteria. The following list is the set of ATR General Design Criteria (GDC) that applies to electric-power systems. UFSAR Chapter 3 (Design of Structures, Components, Equipment, and Systems) discusses the application of the GDC to the ATR.

- GDC 2, Design Bases for Protection Against Natural Phenomena
- GDC 4, Environmental and Missile Design Basis
- GDC 5, Sharing of Structures, Systems, and Components
- GDC 17, Electric Power Systems
- GDC 18, Inspection and Testing of Electric Power Systems.

8.1.8.2 Design Regulatory Guides, Codes, and Standards. Design and installation of the safety-related electrical systems were completed in some cases as part of the original construction. Some systems (or parts of systems) have been added or upgraded since the initial operation of the ATR. In all cases, the systems were designed using standards applicable at the time. Many of the components included within the boundaries are original-equipment design and may not meet current requirements for new installations. However, the systems being addressed are mature and have a considerable operating history that demonstrates reliability consistent with the assumptions of the safety analysis. Surveillance, inspection, and maintenance programs for these systems ensure reliability.

Applicable sections of the following regulations, codes, and standards apply to the design, fabrication, and installation of the above systems. Unless otherwise stated, the edition in effect as of the date of this document applies.

<u>Code of Federal Regulations</u>

29 CFR 1910, Subpart S — Design Safety Standards for Electrical Systems [parts 303, 304, 306(e), 308(b), and 399 (applicable definitions)

<u>American National Standards Institute/American Society of Mechanical Engineers</u>

NQA-1 — Quality Assurance Requirements for Nuclear Facilities

The Institute of Electrical and Electronic Engineers (IEEE), Inc.

IEEE 450	Recommended Practice for Maintenance, Testing, and Replacement of Large Lead Storage Batteries for Generating Stations and Substations (IEEE 1987a)
IEEE 484	Recommended Practice for Installation Design, and Installation of Large Lead Storage Batteries for Generating Stations and Substations (IEEE 1987b)
IEEE 485	Recommended Practice for Sizing Large Lead Storage Batteries for Generating Stations and Substations (IEEE 1983)

National Fire Protection Association (NFPA)

NFPA 70	National Electrical Code

The Contractor

LMITCO-STD-7006	Marking Methods for Equipment, Components, and Materials (LMITCO 1998)
EG&G-STD-7022A	Cleanliness Acceptance Levels for Nuclear or Non-Nuclear Service Components (EG&G Idaho 1984)
INEEL-STD-1111	Electronic Workmanship Standard (INEEL 2003)

8.1.9 Redundant, Diverse, and Independent Features

The following redundant features exist in the ATR electric power system:

- Three feed lines form the commercial power grid to the INEEL (Antelope Substation). Two feed lines form the 138-kV Scoville Substation Loop, and two feed lines from the Loop supply the TRA Substation.
- Any one of three diesel generators can supply the 4,160-Vac loads normally supplied from diesel bus 670-E-3.
- Motors for the following equipment may be energized from either commercial or diesel power, as selected manually for each motor:
  - Primary pressurizing pumps M-14 and M-15
  - HDW circulation pumps M-35 and M-36
  - Primary gland seal pumps M-40 and M-41
  - Standard experiment pressurized-water-loop primary circulating pumps.
- Diesel-commercial 480-Vac MCC E-15 can be supplied from either diesel or commercial power through an automatic transfer switch.

- Diesel generators 670-M-42 and 670-M-43 share a day tank separate from the main fuel supply to support short-term operation. Diesel generator 674-M-6 has a second day tank separate from the main fuel supply to support short-term operation.
- The design of the BBP instrument and utility systems uses separate battery banks to power the instrument and utility UPS inverters.
- The utility BBP system has the capacity to supply all ac loads connected to both the utility and instrument systems during a loss of diesel and commercial power.
- The switchgear control power can be supplied by the utility or instrument BBP System.

The following features of the ATR electric power system reduce the degree of redundancy and independence that otherwise might exist:

FOIA Exemption 3 UCNI, Exemption 7f -- potential vulnerabilities of electrical system

8.1.10 Analysis

Although the ATR electric power system lacks the redundancy and independence that is commonly found in commercial nuclear power plants, ATR retains capabilities to accomplish the safety functions of reactor shutdown, decay-heat removal, primary coolant inventory control, and confinement isolation following a loss of electrical power. The capabilities of ATR systems to accomplish their safety functions in the event of loss of electrical power are discussed in more detail in the remaining sections of this chapter.

Table 8.1-1. Instrument battery-backed power system design loads.[a]

Load Description	Current (Amperes dc)

FOIA Exemption 3 UCNI, Exemption 7f -- battery backup system

Table 8.1-2. Utility battery-backed system design loads.[a]

Load Description	Current (Amperes dc)

FOIA Exemption 3 UCNI, Exemption 7f -- battery backup system

Table 8.1-3. PPS design loads.[a]

Battery banks[b]	Nominal Volts	Amperes
E-13A	32.0	9.8
E-13B	32.0	7.0
E-13C	32.0	8.5
E-13D	32.0	4.0

a. Udy, 2001.

b. The safety-related loads for these battery banks are identified in Appendix A of Chapter 3.

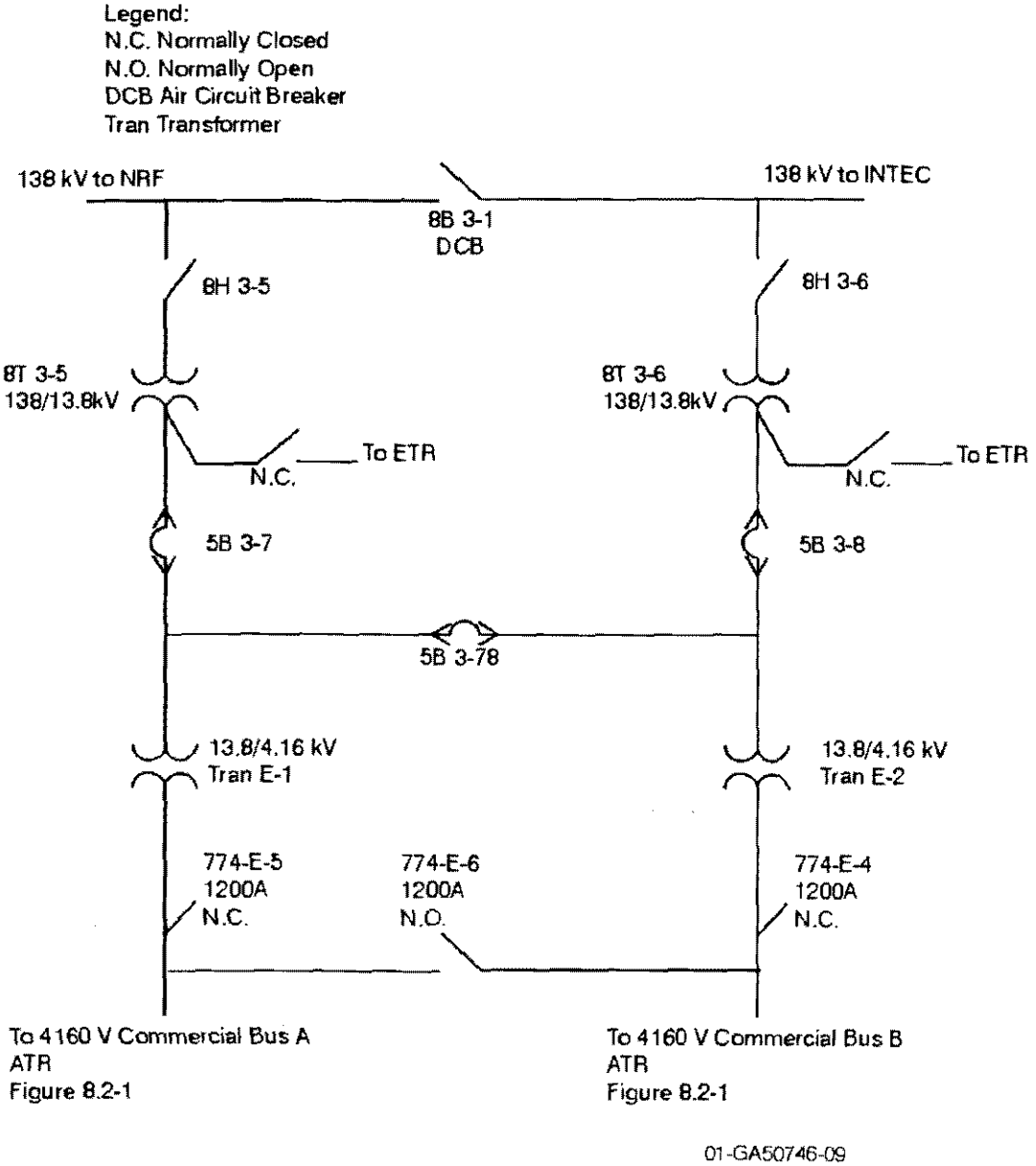

Figure 8.1-1. Simplified diagram of commercial power distribution. **(For Information Only)**

8.2 Commercial Power Systems

8.2.1 Description

The primary power sources for normal plant operation are commercially supplied offsite power service and onsite diesel power systems, in combination. The onsite commercial power distribution is described in this section. The commercial power service is not relied upon to supply safety-related loads.

Plant loads are divided between the two 4,160-Vac commercial buses. Bus A supplies power to primary coolant pumps 670-M-8 and 670-M-9, to secondary coolant pumps 671-M-3 and 671-M-4, deepwell pump No. 4, to an underwater saw, and to 4,160/480-Vac transformer 670-E-4. Bus B supplies power to primary coolant pumps 670-M-6 and 670-M-7, to secondary coolant pumps 671-M-1 and 671-M-2, to 4,160/480-Vac cooling tower commercial bus transformer 671-E-1, and to 4,160/480-Vac transformer 670-E-6. Figure 8.2-1 shows a simplified diagram of the ac power distribution systems.

Commercial buses A and B can be tied together if one of the offsite feeds to either bus A or B is unavailable. Commercial 4,160-Vac bus B has the capability to be tied to the Diesel Power System to supply commercial power to the diesel bus for backup operation. Commercial bus A may also supply the Diesel Power System through commercial bus B. Reverse power relays do not allow the Diesel Power System bus to supply any commercial bus.

8.2.2 Analysis

Even though a single break in the commercial loop will not interrupt power to the facility, Eide, Khericha, and Thatcher (1991) calculated the mean frequency per year for loss of commercial power to be 0.9, based on ATR's history. The loss of commercial power service for ATR results in a loss of normal forced coolant flow as analyzed in Section 15.3.1. Commercial power is not relied on to supply safety-related electrical loads. In the event of a loss of the operating diesel generator, commercial power provides a nonsafety-related power source to the 670-M-10 emergency pump via the tie to commercial bus B via the automatic transfer switch.

CHAPTER 8 – ELECTRIC POWER - UPGRADED FINAL SAFETY ANALYSIS REPORT FOR THE ADVANCED TEST REACTOR	**Identifier:** SAR-153 **Revision:** 10 **Page:** 8-17 of 8-28 **Effective Date:** 08/10/04

CHAPTER 8 – ELECTRIC POWER - UPGRADED FINAL SAFETY ANALYSIS REPORT FOR THE ADVANCED TEST REACTOR	**Identifier:** SAR-153 **Revision:** 10 **Page:** 8-18 of 8-28 **Effective Date:** 08/10/04

CHAPTER 8 – ELECTRIC POWER - UPGRADED FINAL SAFETY ANALYSIS REPORT FOR THE ADVANCED TEST REACTOR	**Identifier:** SAR-153 **Revision:** 10 **Page:** 8-19 of 8-28 **Effective Date:** 08/10/04

FOIA Exemption 3 UCNI, Exemption 7f (Pages 8-17 -- 8-19 – Power system details)

FOIA Exemption 3 UCNI, Exemption 7f (power system details)

8.3.1.3.2 Control, Instruments, and Indicators—On the front of the BBP UPS panels are various controls, indicators, status lights, and meters that control and monitor the BBP UPS. A summary alarm is provided by each BBP UPS that will alarm when any of the UPS internal alarms exist. The summary alarm is annunciated at a local display panel and in the reactor control room (EG&G Idaho 1993).

8.3.1.3.3 Fire Protection—To the extent practical, cables are routed in conduit or cable trays. Sizing of the conductor is based on current carrying-capacity as set forth by the National Electric Code. Many of the components of the electrical systems are original-equipment design and may not meet current requirements for new installations. However, the systems being addressed are mature and have a considerable operating history that demonstrates reliability consistent with the assumptions of the safety analysis. Surveillance, inspection, and maintenance programs for these systems ensure reliability. Two levels of fire protection are provided in the battery rooms: a hand-held carbon dioxide extinguisher and a water sprinkler system. The switchgear area has a water sprinkler system, a hand-held fire extinguisher and a fire hose hanging near the UPS for fire protection. See Chapter 9 (Auxiliary Systems) for additional information on the fire-protection system.

8.3.1.3.4 Ventilation—The ventilation system is adequate to introduce, circulate, and remove air from the utility and instrument battery bank rooms to prevent hydrogen buildup. A hydrogen monitoring system monitors the hydrogen concentration in the battery room. The monitor provides local indication of the hydrogen levels plus a local alarm and a summary alarm for the reactor control room (EG&G Idaho 1993).

8.3.1.3.5 Seismic Requirement—A horizontal acceleration of 0.24 g is used to define the Safe Shutdown Earthquake (SSE) for ATR as discussed in Sections 2.5.2.3 and 3.7.1. The seismic design spectrum for ATR was studied and reported in Gorman (1972). The battery bank support racks provide support for any seismic disturbance with a magnitude less than or equal to the SSE (EG&G Idaho 1993).

Seismically-qualified battery racks protect the battery banks against earthquake-induced vibration and shocks. The batteries are held securely in place in the racks. The switchgear panels, UPSs, and conduits are bolted to the building floors, walls, or ceilings and are able to withstand tremors with a magnitude less than or equal to the SSE with no ill effects (Eide et al. 1991; Jensen 1992).

8.3.1.3.6 Maintenance and Testing—Routine maintenance is performed during reactor shutdown. No online maintenance is required or permitted without administrative approval.

All components of the BBP systems undergo periodic maintenance tests to determine the condition of each individual system. Batteries are checked for physical condition, liquid level, specific gravity, cell voltage, and discharge rate per manufacturer's instructions and industry recommendations (IEEE 1987b).

8.3.1.3.7 Quality of Equipment—Components and modules are of a quality consistent with minimum maintenance requirements and low failure rates. The systems are mature and have a considerable operating history that demonstrates reliability consistent with the assumptions of the safety analysis. Surveillance, inspection, and maintenance programs for these systems ensure reliability.

8.3.1.4 Analysis. Upon loss of commercial power, the M-6 diesel generator, the PPS batteries, and the instrument and utility UPSs and batteries provide emergency power to safety-related loads.

Based on ATR's history, Eide, Khericha, and Thatcher (1991) calculated the mean incidence of commercial power loss to be 0.9 events per year. Calculations made for the revised ATR Probabilistic Risk Assessment give updated probabilities for the following events to fail to shut down the reactor (Thatcher et al. 1994):

- Failure to shut down the reactor on loss of commercial power has a probability of 9E-9.
- Failure to shut down the reactor on loss of diesel power has a probability of 6E-9.

The 674-M-6 diesel generator is expected to start and begin picking up load upon a detected loss of voltage condition with suitably high reliability. Performance degradation including diesel generator reliability or availability requires analysis with respect to the ATR risk assessment to determine acceptability. The failure probabilities and generator performance assumptions for the ATR risk assessment are developed in Atkinson (1994); Thatcher et al. (1994); Thatcher (1997).

The systems and equipment relied upon to provide safety functions include equipment not originally identified as safety-related. As such, the systems and equipment do not meet the requirements and standards usually imposed on such equipment. However, the systems provide multiple power sources, are mature, and have an operating history that demonstrates reliability consistent with the assumptions of the safety analysis.

A PRA based evaluation demonstrates that the loss of both emergency coolant pumps within 30 minutes after a loss of flow event is beyond design basis (Atkinson 1994; Thatcher 1997). A complete loss of flow accident caused by a severe earthquake was also evaluated. Changes to the systems (both safety-related and non-safety-related) analyzed in the PRA based evaluation will require a risk evaluation to ensure that the reliability assumed for these systems is maintained.

8.3.2 DC Power Systems

FOIA Exemption 3 UCNI, Exemption 7f -- power system details

8.3.2.2 Fire Protection for Cable Systems. The consequences of a local fire are mitigated by electrical isolation of redundant channels, by physical separation of redundant sets of equipment, and by enclosing the batteries in racks that are physically separated by masonry block walls or by masonry block walls and distance. The 32-Vdc Power Distribution System's electrical wiring and cable are rated at a minimum 600-V, and conductor sizing is based on current-carrying capacity as set forth by the National Electric Code. Nuclear-grade cables connect between transmitters and RSS terminations, offering maximum resistance to moisture, flame, heat, radiation, and abrasion. Additionally, a local water sprinkler system is provided (INEEL 2000). See Chapter 9 (Auxiliary Systems) for additional information.

8.3.2.3 Ventilation. The ventilation system is adequate to introduce, circulate, and remove air from the four PPS battery bank rooms to prevent hydrogen buildup. A hydrogen-monitoring system monitors the hydrogen levels in the battery rooms. The monitor provides local indication of the hydrogen levels plus a local alarm and summary alarm for the reactor control room (INEEL 2000).

8.3.2.4 Seismic Requirement. A horizontal acceleration of 0.24 g is used to define the SSE for the ATR as discussed in Sections 2.5.2.3 and 3.7.1. The seismic design spectrum for ATR was studied and reported in Gorman (1972). The battery bank support racks provide support for any seismic disturbance with a magnitude less than or equal to the SSE (INEEL 2000). The block rooms located in the diesel pit are seismically qualified. Seismically qualified battery racks are provided to protect the battery banks against earthquake induced vibration and shocks. The batteries are held securely in place by the racks. The switchgear, panels, and conduits are bolted to the building floors, walls or ceilings so they are adequately supported for any seismic disturbance with a magnitude less than or equal to the SSE (Eide, Khericha, and Thatcher 1991; Jensen 1992; Thatcher et al. 1994).

8.3.2.5 Charging. Each system has its own battery charger, each identical in design and operating characteristics. Each charger is designed to automatically maintain the battery bank to which it is connected at constant voltage, regardless of load current requirements. Sufficient capacity is provided in the charger to allow a full recharge of the battery banks in 10 hours following a half-hour discharge cycle while simultaneously maintaining normal load current (INEEL 2000).

The battery chargers in each of the four PPS BBP systems are not safety-related. The batteries are maintained in a charged state so that the reactor can be safely shut down without the aid of battery chargers.

8.3.2.6 Maintenance and Testing. Routine maintenance is performed during reactor shutdown. No online maintenance is required or permitted without administrative approval.

Components of the 32-Vdc System undergo periodic maintenance tests. Batteries are checked for liquid level, physical condition, specific gravity, cell voltage, and discharge rate per manufacturer's instructions.

8.3.2.7 Quality of Equipment. Components and modules are of a quality that is consistent with minimum maintenance requirements and low failure rates. The systems are mature and have a considerable operating history that demonstrates reliability consistent with the assumptions of the safety analysis. Surveillance, inspection, and maintenance programs for these systems ensure reliability.

8.3.2.8 System Evaluation. The RSS part of the PPS is a fail-safe system such that when PPS power is lost, the PPS causes the reactor to scram. The non-RSS part of the PPS closes the stack dampers, and opens the emergency firewater injection valves upon loss of power. The remaining needs for power are decay-heat removal, pump (Primary, Pressurizing and Gland Seal) ESF actions and the OSCC drives which serve as a backup system for the safety rods. The safety systems that remove decay heat (except the vessel vent valves) and supply power to the OSCC drives are powered by non-PPS BBP systems. Manual actions can be taken to depressurize the primary system for decay heat removal or to stop Primary, Pressurizing or Gland Seal pumps if PPS power to the vent valves or ESFs is lost. However, the loss of PPS power does not by itself compromise normal decay heat removal or initiate an off-normal sequence.

8.3.2.8.1 Failure Analysis—A number of analyses have been done for the RSS that include the 32-Vdc power distribution system. Following is a list of these analyses:

- Single Random Internal Failure Mode and Effect Analysis (INEEL 2000, Appendix B-I)
- Probabilistic Risk Assessment (Thatcher et al. 1994)
  - Failure to shut down the reactor on loss of commercial power has a probability of 9E-9.
  - Failure to shut down the reactor on loss of diesel power has a probability of 6E-9.
- Single-Failure Analysis for the PPS Response to Postulated Single Credible Events (INEEL 2000, Appendix B-III).

See Chapter 7 (Instrumentation and Controls) for additional information.

8.3.2.8.2 Channel Independence—Physical separation is maintained between redundant equipment in different separation groups and between safety-related and nonsafety-related equipment. The 32-Vdc power distribution system has four separate and redundant channels, which are physically and electrically separated. A failure in one channel will not cause a failure in the other.

CHAPTER 8 – ELECTRIC POWER - UPGRADED FINAL SAFETY ANALYSIS REPORT FOR THE ADVANCED TEST REACTOR	Identifier: SAR-153 Revision: 10 Page: 8-26 of 8-28 Effective Date: 08/10/04

FOIA Exemption 3 UCNI, Exemption 7f (Pages 8-25 -- 8-26 – drawings of power systems)

8.4 References

Atkinson, S. A., 1994, *ATR CLOFA Frequency Analysis Within One-Half Hour of a Loss of Commercial Power*, EDF TRA-ATR-977, EG&G Idaho, Inc., June 16, 1994.

Atkinson, S. A., 1999, letter to J. A. Jacobi, *Standby Diesel-Gen Outage Time for Insignificant Risk*, Atki-02-99, March 4, 1999.

EG&G Idaho, 1984, *Standard for Cleanliness Acceptance Levels for Nuclear or Non-Nuclear Service Components*, EG&G-STD-7022A, June 21, 1984.

EG&G Idaho, 1993, *Battery-Backed Power System, ATR Electrical Systems, Systems Design Description*, SDD 7.3.3, July 15, 1993.

Eide, S. A., S. T. Khericha, and T. A. Thatcher, 1991, *Advanced Test Reactor Probabilistic Risk Assessment*, EGG-PRP-8823, Rev. 1, EG&G Idaho, Inc., September 1991.

Gorman, V. W., 1972, *TRA Seismic Analysis Method and Design Evaluation Input*, A-196/TR-336, Aerojet Nuclear Company, November 15, 1972.

IEEE, 1983, *IEEE Recommended Practice for Sizing Large Lead Storage Batteries for Generating Stations and Substations*, IEEE Standard 485-1983, Institute of Electrical and Electronics Engineers, Inc., New York, NY.

IEEE, 1987a, *IEEE Recommended Practice for Installation Design and Installation of Large Lead Storage Batteries for Generating Stations and Substations*, IEEE Standard 484-1987, Institute of Electrical and Electronics Engineers, Inc., New York, NY.

IEEE, 1987b, *IEEE Recommended Practice for Maintenance, Testing, and Replacement of Large Lead Storage Batteries for Generating Stations and Substations*, IEEE Standard 450-1987, Institute of Electrical and Electronics Engineers, Inc., New York, NY.

INEEL, 2000, *ATR Reactor Shutdown System, System Design Description for the ATR Plant Protective System (PPS)*, SDD 7.7.2, October 5, 2000.

INEEL, 2003, *Electronic Workmanship Standard STD-1111*, Rev 1, January 27, 2003.

Jensen, S. A., 1992, *Conduit Support — Seismic Loads*, EDF 1-SAJ-01-91, Revised, EG&G Idaho, Inc., February 25, 1992.

LMITCO, 1998, *Marking Methods for Equipment, Components, and Materials*, STD-7006, October 9, 1998.

Maughan, A. L., 1997, *ATR Battery Banks Specific Gravity Testing*, EDF TRA-ATR-1232, Rev. 1, LMITCO, November 10, 1997.

Thatcher, T. A., et al., 1994, *Update to the Advanced Test Reactor Probabilistic Risk Assessment (Level 1, 2, and 3 Including Shutdown Operations)*, EGG-PRP-11229, EG&G Idaho, Inc., May 1994.

Thatcher, T. A. 1997, ATR CLOFA *Frequency Analysis with Proposed Hard-wired Auto-start Features*, EDF TRA-ATR-1229, LMITCO, March 27, 1997.

Thatcher, T. A., 2000, *Early Complete Loss of Flow Accident (CLOFA) Re-evaluation for Loss of Diesel Power Events with the LOCA ESF Feature*, EDF TRA-ATR-1615, LMITCO, October 18, 2000.

Udy, A. C., 2001, *Analysis of the Operating Conditions for the ATR Battery Banks Calculations of Capacity Versus Time and Voltage*, EDF TRA-ATR-1056, Rev. 4, December 11, 2001.

CHAPTER 9

AUXILIARY SYSTEMS

INTENTIONALLY BLANK

CONTENTS

ACRONYMS/ABBREVIATIONS 9-6

9. AUXILIARY SYSTEMS 9-9

9.1 Fuel Storage and Handling 9-9

9.1.1 New Fuel 9-9
9.1.2 Spent and Irradiated Fuel 9-9
9.1.3 Criticality Control 9-14
9.1.4 Canal Recycle System 9-17
9.1.5 Cranes 9-18

9.2 Auxiliary Water Systems 9-24

9.2.1 Raw, Fire, and Domestic Water 9-24
9.2.2 Demineralizer System 9-25
9.2.3 Secondary Coolant System 9-25
9.2.4 Utility Cooling Water (UCW) 9-26
9.2.5 Low-pressure Demineralized Water 9-27
9.2.6 Gland Seal Water and Warm Seal Water 9-27
9.2.7 N-16 Demineralized Water 9-28
9.2.8 Reactor Bypass Demineralizer 9-28
9.2.9 Safety-Related Systems 9-28
9.2.10 ATR Chemistry Control and Process Water Sampling 9-30

9.3 Compressed Air Systems 9-43

9.3.1 Utility Air 9-43

9.4 Heating and Ventilation 9-47

9.4.1 Operating Areas Ventilation System 9-47
9.4.2 Canal Area Ventilation System 9-48
9.4.3 Utility Area Ventilation System 9-48

9.5 Other Auxiliary Systems 9-54

9.5.1 Fire Protection Design Requirements 9-54
9.5.2 ATR Communication Systems 9-67
9.5.3 ATR Normal and Emergency Lighting Systems 9-67
9.5.4 Experiment Storage 9-68

9.6 References 9-86

FIGURES

9.1-1. Advanced Test Reactor Canal 9-23

9.2-1. Simplified Diagram of the Advanced Test Reactor Raw Water and Firewater Supply System . 9-37

9.2-2. Simplified Diagram of Portions of the TRA Firewater System (Applicable to the ATR EFIS) 9-38

9.2-3. Simplified Diagram of the ATR Low-Pressure Demineralized Water System 9-39

9.2-4. Simplified Diagram of the Gland Seal Supply 9-40

9.2-5. Simplified Advanced Test Reactor Gland Seal/Warm Seal System 9-41

9.2-6. Diagram of the N-16 flow system 9-42

9.3-1. Simplified Utility Air Diagram 9-45

9.3-2. High-Pressure Air System 9-46

9.4-1. The Reactor Building Heating and Ventilating System (HVS-1 and HVS-5 System) 9-50

9.4-2. Critical Facility Area Heating and Ventilating System (HVS-2 System) 9-51

9.4-3. Storage Canal Area Heating and Ventilating System (HVS-3 System) 9-52

9.4-4. Office Area Heating and Ventilating System (HVS-4 System) 9-53

9.5-1. Designated Fire Areas Building TRA-670 (Main Floor) 9-72

9.5-2. Designated Fire Areas Building TRA-670 (1st Basement) 9-73

9.5-3. Designated Fire Areas Building TRA-670 (2nd Basement) 9-74

9.5-4. Designated Fire Areas Building TRA-670 (First and Second Mezzanine) 9-75

9.5-5. Designated Fire Areas Building TRA-670 (Cross Section Grid Line 5) 9-76

9.5-6. Designated Fire Areas Building TRA-670 (Cross Section Grid Line D) 9-77

9.5-7. Designated Fire Areas Building TRA-670 (Cross Section Grid Line 3) 9-78

9.5-8. Designated Fire Areas Building TRA-670 (Cross Section Grid Line 8) 9-79

9.5-9. Typical Deluge Fire Sprinkler System Schematic 9-80

9.5-10. Typical Preaction Fire Sprinkler System Schematic 9-81

9.5-11. Typical Wet-Pipe Fire Sprinkler System Schematic 9-82

9.5-12. Typical Fire Alarm Panel Schematic 9-83

9.5-13. Typical Preaction Control Schematic 9-84

9.5-14. Typical Halon 1301 Special Extinguishing System Schematic 9-85

TABLES

9.1-1. Fuel storage and handling drawings 9-19

9.1-2. Criticality scenarios 9-20

9.1-3. Advanced Test Reactor canal cranes 9-21

9.1.4. Advanced Test Reactor main floor cranes 9-22

9.2-1. Auxiliary water systems 9-32

9.2-2. Boundary valves for the safety-related part of the Low-Pressure Demineralized Water System (LDW) 9-34

9.2-3. Boundary valves for the safety-related part of the Emergency Firewater Injection System 9-35

9.2-4. Boundary components for the safety-related portion of the N-16 flow system 9-36

ACRONYMS/ABBREVIATIONS

ANL-W	Argonne National Laboratory-West
ASME	American Society of Mechanical Engineers
ATR	Advanced Test Reactor
ATRC	Advanced Test Reactor Critical Facility
AVAS	Automated Voice Announcement System
CAM	continuous air monitor
CCA	Criticality Control Area
CFA	Central Facilities Area
CSE	Criticality Safety Evaluation
DCS	distributed control system
DOE	U.S. Department of Energy
DOE-ID	U.S. Department of Energy, Idaho Operations Office
DOT	U.S. Department of Transportation
ECC	Emergency Control Center
EDF	engineering design file
EFIS	emergency firewater injection system
EG&G Idaho	EG&G Idaho, Inc.
ESF	engineered safety feature
EGs	evaluation guidelines
ETR	Engineering Test Reactor
FACP	Fire Alarm Control Panel
FH	Fire hydrant
FHA	Fire Hazard Analysis
FM	Factory Mutual Research Corporation
FTS	Federal Telecommunications System
FY	fiscal year
GSW	gland seal water
HDW	high-pressure demineralized water
HVA	Control Room Air Treatment System
HVS	Heating and Ventilating System
IBC	International Building Code
INA	Intelligent Network Annunciator
INEEL	Idaho National Engineering and Environmental Laboratory
IRT	incident response team
IVPAMS	In-Vessel Post Accident Monitoring System
IX	Ion Exchange
K_{eff}	k-effective
kW	kilowatt

LCA	Loop Control Area
LDAS	Loop Data Acquisition System
LDW	low-pressure demineralized water
LMITCO	Lockheed Martin Idaho Technologies Company, Inc.
MIP	Multiplex Interface Panel
MTR	Materials Test Reactor
Net	Emergency Radio Network
NEC	National Electrical Code
NFPA	National Fire Protection Association
NSR	Nonsafety-related
OSHA	Occupational Safety and Health Administration
PCS	primary coolant system
PPS	plant protective system
RDAS	reactor data acquisition system
RML	Radiation Measurements Laboratory
RMS	radiation monitoring system
RMSS	radiation monitoring and seal system
SAR	Safety Analysis Report
SATS	Surveillance and Test System
SCS	secondary coolant system
SLC	Signal Line Circuits
SPAF	Special Process Aluminum Fuel
SSE	safe shutdown earthquake
TAN	Test Area North
TDH	total dynamic head
TRA	Test Reactor Area
TRAMO	Test Reactor Area Maintenance Operations
TSR	Technical Safety Requirements
UCW	utility cooling water
UFSAR	Upgraded Final Safety Analysis Report
UL	Underwriters Laboratories, Inc.
VHF	very high frequency

INTENTIONALLY BLANK

9. AUXILIARY SYSTEMS

9.1 Fuel Storage and Handling

9.1.1 New Fuel

New fuel for the Advanced Test Reactor (ATR) is stored in the Nuclear Materials Inspection and Storage Facility. This facility is the subject of its own safety analysis report. New fuel is transported from the Nuclear Materials Inspection and Storage Facility to the ATR in the same fuel element shipping containers used to ship the fuel from the vendor (Bridges et al 2000) as needed.

During core requalification programs requiring low-power physics testing, unirradiated fuel elements may be transferred from the ATR Critical (ATRC) Facility to the ATR. The ATRC Facility, which is covered by its own safety analysis report, is adjacent to the ATR main reactor floor. Fuel transfers from the ATRC Facility to the ATR are done either with the ATR fuel transfer racks (Dwg. No. 035042) from the ATRC Facility or by hand carrying the fuel elements. ATR and ATRC employ comparable fuel handling limitations for criticality safety.

9.1.2 Spent and Irradiated Fuel

9.1.2.1 Design Basis. The canal shielding is designed to protect personnel in working areas adjacent to various parts of the canal. The working dose rate at the canal surface is normally less than 1 mrem/hr and is normally less than 50 mrem/hr during irradiated fuel element transfers. The expected dose rate below the canal bottom is less than 1 mrem/hr.

The approved, by criticality analysis, racks (also called underwater grids) in the canal have spaces for storage of up to 876 ATR fuel elements. For all foreseeable reactor use the storage space is adequate for irradiated fuel (< 1200 days) and for fuel (>1200 days) that is to be re-loaded into the reactor and for holding spent fuel that is to be shipped out.

Normal makeup for canal water level fed into the west end of the canal from the low-pressure demineralized water system (LDW). The irradiated fuel storage area of the ATR canal is provided with redundant and independent makeup water supplies. One fed from the firewater supply system and one fed from LDW. The irradiated fuel storage area is separated from the rest of the canal by bulkheads, typically short bulkheads are used. These water supplies can provide makeup to the irradiated fuel storage section to compensate for evaporative losses and bulkhead seal leakage in the event of a major draining event in the rest of the canal.

The canal recycle system (see section 9.1.4) is designed to remove decay heat, generated primarily by irradiated fuel elements in the storage grids, and to maintain water radioactivity and chemistry within specifications.

The canal area is designed to permit easy and effective handling of radioactive materials and casks in the canal. The ATR canal was designed prior to current seismic requirements. Chapter 3 (Design of Structures, Components, Equipment, and Systems) discusses the seismic analyses that have been performed on the canal and storage grids. These analyses show that the canal and grids will withstand a safe shutdown earthquake.

All approved fissile material storage devices are designed for a k_{eff} of ≤ 0.95. Administrative controls are applied to fuel element and other fissile material handling and storage to provide criticality control. Fissile material units, except ATR elements, loop experiments, and quantities of fissile material of 15 g or less in aggregate, are limited to ≤ 365 g U-235 equivalent (plus ≥ 1 ft spacing) so that k_{eff} need not be considered.

9.1.2.2 Facilities and Equipment Description. Irradiated ATR fuel and experiments are temporarily stored in the canal for either reloading into the ATR core or for later shipment to other facilities for post-irradiation examination or disposal. The storage canal contains bulkheads, fuel storage grids, general storage grids; a gamma facility grid; I-piece grids; X, S, and T basket grids; trash liners for casks; an experiment viewing window; a saw table; an inpile tube storage rack; a deepwell barrier; a safety rod storage rack; and five cask loading areas. Areas used to support large shipping casks are reinforced to bedrock.

The ATR canal walls and floors are constructed of reinforced concrete. The canal bottom is 5.5 to 7 ft of concrete. The canal area immediately north of the reactor control room is 200 ft long, 44 ft wide, and has a floor-to-ceiling height of 48 ft.

All drawing numbers referred to in this section are listed, with their titles and function categories, in Table 9.1-1, "Fuel storage and handling drawings." Following is a descriptive summary of the canal and associated major equipment items.

9.1.2.2.1 Canal—Although interconnected, the canal (a typical configuration is shown in Figure 9.1-1.) may be considered as separated into the working canal, the storage canal, and the ATRC Facility canal. The ATRC Facility is the subject of its own SAR and is not discussed further here. The canal divisions can be made by insertion of inflatable seal bulkheads. The working canal that adjoins the reactor is 8 ft wide × 27 ft long. The storage canal, which connects to the working canal like the top of a T, is 8 ft wide × 156 ft long.

The working canal section immediately adjacent to the reactor is 45 ft deep measured from the top of the parapet. This section contains a transfer tube (Drawing No. 120788) that is used to transfer spent fuel, reactor components, and capsule experiments between the canal and the reactor. The loop cask transfer station and three experiment storage racks (one 6-position rack on the east and two 4-position racks on the west) are located above the 45 ft deep section of the working canal. The remainder of the working canal is 21 to 23 ft deep measured from the top of the parapet.

The storage canal is 21 ft deep measured from the top of the parapet, except for a section in the east end that is 40 ft deep.

The canal is lined throughout with seal-welded stainless steel sheets that extend to the top of the parapet. Sheets covering the walls are 14-gage thickness and canal bottom sheets are 11-gage thickness. The canal is filled with demineralized water. The canal water level is normally maintained at 1 ft below the top of the canal parapet by five overflow drains. Effluent from the canal overflow drains is discharged to the warm waste water. Three vacuum cleaning devices are provided to remove accumulated debris from the canal. One vacuum cleaning device is a mobile unit that is usually used to clean submerged equipment and the canal floor. The unit includes a filter and the filtered water is returned to the canal. The other two vacuum cleaning devices are part of the ion exchange units which filter the canal water and return it to the canal. An 8-in. LDW quick-fill line can be used for makeup when large volumes of water are required. Emergency firewater makeup is supplied to the spent fuel storage area of the ATR canal. In

addition, emergency LDW canal makeup is provided as a redundant and independent makeup water supply to the spent fuel storage area. Both emergency makeup systems to the ATR canal are designed to provide makeup water for leakage and evaporative losses from the spent fuel storage area of the ATR canal.

Figure 9.1-1 shows 5 pairs of wall pockets where full-height or short water-tight bulkheads are or may be used to isolate canal areas. Note that Figure 9.1-1 is reversed; i.e., north is bottom of the page, because looking south is the only full view when in the facility. The five wall pocket pair locations are one between the ATRC and ATR canals, three where the working and storage canals join, and one near the east end of the storage canal. Each area may be drained independently by insertion of the proper isolating bulkhead(s) and by using the drains in the bottom and side of the canal. Each drain is valved on the outside of the canal wall, and piping connects the drains with the warm waste tank. In addition to the drain valves, there is a cover plate located over each drain line inside the canal. These plates are installed to limit inadvertent draining of the canal in the event of a broken drain line and must be removed before drainage is possible.

During normal operation, four bulkheads are in place. One full-height bulkhead is at the north end of the ATRC Facility canal and one full-height bulkhead is at the midpoint of the working canal. The bulkhead in the working canal operates automatically with door 51, which is part of confinement. However, the bulkhead is not part of confinement, since door 51 in its closed position penetrates the surface of the canal water. Two short bulkheads, about 6.5 ft from the canal floor, isolate thermally hot fuel in the east end of the canal. In the event of a canal drainage accident in other areas, the short bulkheads will delay or prevent loss of water coolant for the freshly irradiated fuel. Emergency firewater and LDW makeup are available to supply makeup water to the spent fuel storage area of the ATR canal.

Fourteen weep holes are located in the first basement and two weep drains are located in the experimenters canal section. These drains "tattle tale" if any water is leaking through the stainless steel canal liner.

An automatic wire scanner used for determining activity of monitor wires is located on the south side of the storage canal near the west end. The motor driven scanner is mounted on the canal wall underwater. The control console and teletype are located just south of the storage canal and east of the ATRC canal extension.

Three penetrations in the bottom of the storage canal were originally designed for connection between the canal and a hydraulic rabbit facility in the reactor. The penetrations have not been used. These three penetrations are sealed by lead-filled shield plugs. The locations and design details are shown in Drawing Nos. 120108 and 120110.

A canal water level alarm system is mounted on the southeast side of the canal parapet. A pressure switch is calibrated to sense a drop in pressure resulting from a drop in canal water level and to trigger alarms in the reactor control room. The battery-backed emergency firewater makeup measures the canal water level independently which provides indications and alarms and will automatically initiate firewater flow to the canal for lowering canal levels. The In-Vessel Post Accident Monitoring System (IVPAMS) also measures canal water level and provides indication on the IVPAMS displays in the ATRC office area and the Emergency Control Center (TRA-680).

9.1.2.2.2 Working Canal—The working canal is the receiving area for fuel elements and experiments that are discharged from the reactor. It also provides storage for loop test assemblies and components. Except quantities of fissile material of 15 g or less in aggregate, separation of fuel units by at least 1 ft is maintained during fuel handling.

The working canal includes the loop cask transfer station. The cask transfer station provides a platform for the ATR casks used for transfer of loop components (test assemblies, pressure tubes, and flow tubes) into or out of the canal. The cask transfer station provides necessary shielding for the protection of operating personnel during loading operations. The cask transfer station is positioned in the canal by the fit of the alignment lugs in the top plate of the station and by the positioning stops on the bottom of the station. The working canal also includes three wall-mounted experiment storage racks (Drawing No. 120769, 409820, 415304, 420722). The transfer station and the experiment storage racks are subcritical and seismically evaluated for the Safe Shutdown Earthquake (SSE) (Jones 1979; Abrashoff 1979; O'Brien 1991).

9.1.2.2.3 Storage Canal—The storage canal provides storage for fuel elements, reactor components, experiments, and miscellaneous irradiated materials. The east end of the storage canal contains a deepwell with a shielded viewing window. The window is recessed about three ft into the canal wall to minimize damage by handling operations in the canal. The total oil-filled glass thickness, plus the water in the inset, give shielding protection equivalent to the 7-ft-thick concrete wall.

9.1.2.2.4 Reactor Fuel and Experiment Storage Racks—Canal fuel storage grids 5 and 6 (Drawing No. 120787) are the designated storage grids for dummy fuel elements and are not commonly used for any other purpose. Dummy fuel elements, required for reactor shutdown work, are stored in grids 5 and 6 when not in use. Some dummy fuel elements contain depleted uranium. Depleted uranium is uranium with less than the natural content of U-235. Grids like 5 and 6 are used elsewhere for fuel storage and, if needed, could be used for fuel storage in the ATR canal, based on the safety evaluation in Section 9.1.3.8.

Fuel storage grids 9 through 23 (Drawing No. 035713) are 37 × 55 in. in width and length × 61.75 in. high. Each grid has 40 compartments for fuel elements. The compartments are lined with cadmium 0.020 in. thick and 58 in. long (long enough to completely surround the active section of a cut or uncut ATR fuel element). The term "cut" means the end boxes are cut off but the plates are still assembled as in the originally fabricated element. The criticality evaluations of the various grids and other fissile material storage locations in the canal are discussed in section 9.1.3.8.

Fuel storage grids 29, 35, and 36 (Drawing No. 117015) are each 92 compartment grids obtained from the Idaho Chemical Processing Plant. These grids are used for storage of fuel elements and canned fuel elements and are also used for gamma irradiations of test materials. Like the other fuel storage grids, the compartments are lined with 0.020 in. of cadmium for neutron absorption and are sized for cut fuel element storage. Without credit for cadmium, the criticality margin is adequate for ATR fuel elements.

The working canal has two 4-position (Drawing No. 120769) and one 6-position (Drawing No. 409820) wall-mounted loop experiment storage racks. By analysis, a U-235 content of 2 kg per experiment in the experiment storage rack will remain subcritical (Jones 1979).

General Storage Grid 2 (Drawing No. 035603) is used to store reactor components, baskets, fixed shims, H-hole pieces, etc. The grid has a total of 136 positions, 15 large positions, and 121 small round hole positions. The grid may be used for storage of up to 365 g U-235 or equivalent fissile material.

The X-basket grid (Drawing No. 415863) is a 60-compartment grid that is used to store shorter baskets and reactor components. The grid may be used to store up to a total of 365 g U-235 or equivalent fissile material.

The S and T grids (Drawing No. 020623) each have 63 compartments used to store shorter baskets, experiments, and reactor components. The grids may each contain up to a total of 365 g U-235 or equivalent fissile material.

The I-piece grids (Drawing No. 436984) each have 9 compartments for large I pieces, also called I-hole capsules or lead experiments, and 8 compartments for small I pieces. The compartments accommodate large I pieces up to nominal 5-in. diameter and small I pieces up to nominal 3-in. diameter. The grids may each contain up to a total of 365 g U-235 or equivalent fissile material.

The bucket grid (Drawing No. 020105) contains 2 rows of 10 stainless steel storage buckets. The buckets are 8 in. in diameter and 10 in. deep and are identified as Numbers 1 through 20. Fissile material storage is limited to a total of 365 g U-235 or equivalent fissile material for the entire grid.

The 43 canal hooks located on the south side (west end of the storage canal) and 12 canal hooks located on the east side (center of the working canal) are used for storage of long experiments, reactor components, and flux wire buckets. Fissile material storage is limited to a total of 365 g for the 43 hooks and 365 g for the 12 hooks (Knight 1992).

Inpile tube (IPT) experiment storage racks (Drawing No. 419947) for non-fissile experiment storage are located in the northeast section of the storage canal.

9.1.2.2.5 Underwater Saw—The underwater saw (Drawing No. 120772) is used to cut radioactive material such as spent fuel elements, inpile piping, or other trash that is stored in the canal. The hazard assessment and attendant operating restrictions are in Close (1995). It is intended that the hazard assessment be updated as needed for additional materials to be cut, and that operating controls shall conform to those for specifically identified materials. Spent ATR fuel elements are routinely processed using this saw to remove the upper and lower end fittings from the elements prior to shipment to storage outside the ATR canal. Cutting into a fueled section of a fuel element would release small amounts of fission products and fissile material into the canal. No cutting of the fuel element is done where the saw would cut into a fueled section of the fuel plate. Cutting of scrap equipment and other trash containing metals which can be ignited and will burn underwater requires an analysis to show that the cutting operation is safe. This includes metals such as magnesium, zirconium and its alloys, uranium, titanium, hafnium, and lithium/aluminum alloys where the lithium content is greater than 6% of the atomic weight. Once ignited, these materials will tend to burn underwater, producing hydrogen gas. This has the potential of an uncontrolled release of contamination to the canal area.

The saw is located on the south side of the storage canal, just west of the working canal. The saw table is attached to the canal wall 5 ft above the canal floor. The table area is about 3 × 30 ft in three removable sections.

9.1.2.2.6 ATR Stagnation Column—The ATR stagnation column (Drawing No. 021532, 402878) is used for testing fuel elements to identify fuel elements with cladding failures resulting in fission product leakage. Stagnation or soak tests are generally performed after operational data from ATR stack and primary coolant system radioactivity monitoring instrumentation indicate a fuel element cladding failure has occurred. Soak testing can generally identify the specific fuel element(s) with cladding failures. The safety analysis and attendant operating restrictions are in Chapman (1996).

9.1.3 Criticality Control

The Contractor's standard procedure for fissile material control is *Engineering and Research*, criticality safety program requirements. The requirements are summarized below. The criticality control requirements are based on U.S. DOE Order 420.1A (DOE 2002) and American Nuclear Society Standards invoked by the Order.

9.1.3.1 General Requirements. Fissile material control is maintained by designating Criticality Control Areas (CCA). Because of the amount of fissile material in the facility, the ATR building (TRA-670) is designated a procedure CCA. Procedure CCA require supporting criticality safety evaluations (CSE) which are the basis for area specific controls and limits. The applicable CSE and resulting controls are discussed in Section 9.1.3.8

9.1.3.2 Personnel Qualifications. Certified fissile material handler requirements are given in *Engineering and Research*, criticality safety program requirements.

9.1.3.3 Inventory Control. An inventory control procedure is maintained primarily for safeguards, security, and accountability. Inventory control, however, also contributes to criticality control in that it precludes having any unknown quantity or location of fissile material. For inventory purposes, CCAs are defined, and the records are updated for each transfer of fissile material into or out of the CCA. Records are also updated for each movement of fissile material from one location to another within the CCA. Responsibility for the CCA records is assigned to a nuclear material custodian. In addition to the continuous updates, a physical inventory and records verification is performed periodically.

9.1.3.4 Control Parameters. Small quantities of fissile material, 15 g or less, in aggregate, are excluded from criticality storage and handling controls. Examples of such material are fission rate monitors or flux wires, some fueled experiments, and some instrument sources.

The double contingency requirements of the criticality safety program are met primarily by controlling mass and spacing as shown in Table 9.1-2 discussed in Section 9.1.3.6. All storage and transport devices are analyzed for actual or assumed water moderation and, if applicable, are analyzed for the proximity of lead, beryllium, or other strong moderator/reflector materials in addition to water.

The upper limit k_{eff}, including calculation uncertainties and bias, for storage and handling devices in normal or credible off-normal scenarios is 0.95. Allowable fissile material forms (also called fuel handling units) are those for which it can be shown by analysis or commonly used handbooks that two or more adjacent water-moderated forms are subcritical. When out of approved storage, spacing between forms is maintained such that proximity neutron coupling is below that for criticality, typically 1 ft minimum spacing in water. The allowable mass for miscellaneous unanalyzed fissile material specimens out of approved storage at any one time is no more than 45% of critical mass if double batching is credible.

9.1.3.5 Emergency Procedures. In the event of an ex-reactor criticality, *the INEEL Emergency Plan/RCRA Contingency Plan* and the TRA facility specific addendum apply.

9.1.3.6 Criticality Scenarios. The criticality scenarios listed in Table 9.1-2 are based on a 1992 analysis included in Mobley (1994). The required protection for the scenarios is derived from Tables 3 and 5 in the cited reference. The required protection shown in Table 9.1-2 is part of the basis for Technical Safety Requirements (TSRs).

9.1.3.7 Exemption on Criticality Alarm System. The ATR first floor and the ATR canal are both exempt from requirements for criticality alarm and criticality detection systems as allowed by reference DOE (2000).

Reactor loading is the only unshielded fissile material handling activity needed or allowed on the ATR first floor. As discussed in Section 9.1.1, new (unirradiated) fuel elements are brought to the ATR reactor top on the building first floor for loading into the reactor. Fueled experiments, as allowed by the Experiment Safety Analysis, may also be at the reactor top for loading, but not at the same time as reactor fuel. A probabilistic analysis (Atkinson 1994) shows an extremely low frequency of criticality during the reactor top fuel handling operation. This evaluation was based on the previous practice of setting up a temporary fissile material control area on the reactor top. The conclusions are valid for the current practice which establishes a permanent Criticality Control Area for the ATR building (TRA-670) excluding the ATRC Facility. Criticality on the ATR first floor is deemed not credible and is therefore exempt from criticality alarms and detection per DOE (2000). Airborne radioactivity monitoring for the area is provided by CAMs.

The canal exemption from criticality alarms and detection is based on adequate shielding for personnel protection as defined in ANS Standards referenced in DOE (2000). Briefly, the requirement is a dose less than 12 Rad in free air for a criticality incident. The original analysis, Summers (1984), used the incident then defined as 1.0E+18 fissions. Later the incident definition was increased to 2.0E+19 fissions. A new analysis, Atkinson (1991) (for another facility but applicable to the ATR canal), shows that 8 ft of water is adequate shielding. Handling of potentially critical fissile material units in the ATR canal occurs with more than 8 ft of water cover. Airborne radioactivity monitoring for the area is provided by CAMs.

9.1.3.8 Criticality Safety Evaluations

The calculated k_{eff} (plus two sigma) for an infinite array of storage grids 5 or 6 (Drawing No. 120787) with an ATR fuel element in each storage location (40 elements per grid) and without the presence of cadmium absorber is 0.939 (sigma = 0.002) (Stuart 1998). Neither the addition of beryllium reflection around the racks nor a dropped ATR fuel element on the top of each rack had significant effect on the reactivity of the system. ATR fuel elements were assumed to contain 1085 g U-235 and no boron. The SSE seismic evaluation of these fuel storage racks is documented in Holman (1988) and Anderson (1991).

The calculated k_{eff} (plus two sigma) for an infinite array of storage grids 9 through 23 (Drawings No. 035713) with an ATR fuel element in each storage location and without the presence of cadmium absorber is 0.733 (sigma = 0.001) (Stuart 1998). The addition of a dropped ATR fuel element on the top of each rack had no significant effect on the reactivity of the system. Stuart (1998) shows that beryllium reflection has a small effect [k_{eff} increased to 0.743 (sigma = 0.001)]. ATR fuel elements were assumed to contain 1085 g U-235 and no boron. The SSE seismic evaluation of these fuel storage racks is documented in Holman (1988) and Anderson (1991).

Due to increased spacing between the storage positions of grids 29, 35, and 36 and storage positions of grids 9 through 23, the analysis of grids 9 through 23 will bound that of grids 29, 35, and 36. The calculated k_{eff} (plus two sigma) for an infinite array of storage grids 29, 35, and 36 (Drawings No. 117015) with an ATR fuel element in each storage location and without the presence of cadmium absorber is 0.636 (sigma = 0.002) (Stuart 1998). ATR fuel elements were assumed to contain 1085 g U-235 and no boron. The SSE seismic evaluation of these fuel storage racks is documented in Holman (1988) and Anderson (1991).

The working canal experiment wall-mounted storage racks primary and independent criticality analyses for loop experiments are in Jones (1979) and Abrashoff (1979). Conservatively calculated representative k_{eff} values are 0.81 for both the 6-position and 4-position racks. The SSE seismic evaluation of the experiment storage racks and the transfer station is documented in O'Brien (1991).

Criticality analyses for the new fuel element shipping boxes used during normal reactor refueling are in Bridges et al (2000). Criticality analyses for the ATR transfer racks that may be used during refueling after core internal changeouts or core reconfiguration are in Stuart (2001).

Other storage and transfer devices in the ATR canal are limited to ≤ 365 g U-235, or to a linear array of ATR fuel elements, or no more than five ATR fuel elements. Under optimum conditions, 365 g of U-235 is about 45% of a minimum critical mass. Any array of less than seven ATR fuel elements in water is subcritical (Kim 94). An array of 40 elements, in two layers of 20 elements each, one on top of the other in contact in water, is subcritical (Mobley 1993).

The criticality analyses for handling in the canal of beryllium reflector pieces from the reactor are in Abrashoff (1980), Knight (1991), and Stuart (1998). It is shown that a large beryllium block adjacent to a fully loaded fuel element storage rack will not result in criticality.

It is shown in the safety evaluation above that all fissile material storage devices have an adequate safety margin for the fully flooded condition. Handling quantities, except fuel elements and loop experiments, are no more than 45% of the minimum critical mass for the fully flooded condition. The control applied to fuel elements out of storage is based on the previously cited analysis showing that less than seven ATR fuel elements in any water-flooded configuration is subcritical. Overall, the envelope for fissile material handling is defined by analyzed storage limits, by limits on fuel units out of storage, and by the requirement for separation of at least 1 ft between multiple units out of storage or units out of storage and storage devices.

Fuel elements in the ATR stagnation column are covered by limitations on fuel elements out of approved storage.

Occasionally items containing small amounts of fissile material are brought into the ATR building. Examples of such items include fission rate monitors or flux wires, some fueled experiments, and some instrument sources. These miscellaneous fissile material specimens are excluded from the criticality safety controls for handling and storage as long as the amount of fissile materials is 15 g or less of U-235 equivalent, in aggregate. The criticality safety controls for storing and handling fissile material provide large margins of safety from an inadvertent criticality. For example, the administrative controls for miscellaneous specimens that contain ≤ 365 g of U-235 are: (a) no more than 365 g of U-235 out of storage at a time, (b) maintain at least one ft separation between fissile material forms, and c) no more than one type of fissile material form out of storage at a time. Including the 15 g of U-235 with the 365 g U-235 specimen does not affect the margin of safety because at least three failures of controls are still

necessary before a critical condition is possible. Consider two 365 g specimens out of storage plus 15 g U-235 equivalent, assembled into an unfavorable geometry, and fully water reflected and flooded. This assembly is still subcritical. Additional fissile material must be added and/or the assembly must be surrounded by a material that is more reflective than water to achieve a critical condition. The presence of the 15 g of U-235 equivalent does not significantly affect the margin of safety against an inadvertent criticality. This is true for all allowed fissile material forms in the ATR.

Occasionally fission rate monitors are placed in ATR fuel elements, which are later loaded into the core, to measure the core flux distribution. The measurement is accomplished by irradiating small aluminum wires that are about one quarter of an inch long and 40 mils in diameter. These wires contain small quantities of U-235, about 1/40 g per 17 wires. Typically, the wires are placed near the midplane of the fuel element with the basic loading being 17 wires per element. Infrequently, the wires are placed axially in various water channels with up to 48 wires per element. Loading the fission rate monitor wires (flux wires) into the fuel element necessitates having two different fissile material forms out of approved storage simultaneously and bring two fissile material forms into close proximity. The U-235 mass of the flux wires is counted as part of the fissile material mass of the fuel element for criticality control. Normal operation of the ATR requires handling of fuel elements that contain nominally 1075 g U-235. Even the addition of double the typical loading of flux wires is insignificant (< 2 g) to the criticality safety analysis (Durney 1993).

9.1.4 Canal Recycle System

9.1.4.1 Design Basis. The ATR canal water recycle system (Drawing Nos. 156496, 156511, and 156504) is in three separate parts that do not have physical interfaces with each other. The heat removal part removes fuel element decay heat. The ion exchange parts (two identical units) remove suspended and dissolved solids from the canal water.

The heat removal part of the recycle system circulates the canal water at approximately 600 gpm, which maintains canal temperature at less than 85°F. The design basis heat load is 19 cores (760 elements) with conservatively assumed decay times and operating conditions. An ultraviolet light unit in the canal recycle system aids in microorganism control.

The water specification parameters maintained by the ion exchange units are conductivity, pH, dissolved solids, suspended solids, and radioactivity. Nitric Acid is added to augment pH control. Skimmers, which aid in removing surface debris, hung from the east and west end walls provide suction to the ion exchange units.

The equipment consists of two centrifugal recirculation pumps (one on standby status), an ultraviolet sterilizer, a water-to-water shell and tube heat exchanger, two ion exchange units (Drawing No. 156504) including pumps and filters, and flow, temperature, and pressure instrumentation.

9.1.4.2 Safety Evaluation. The canal wall penetrations for the heat removal part of the canal recycle system are about 9 ft above the canal floor. In a severe pipe break accident the canal water could drain to this level. This and similar accidents were evaluated in the Probabilistic Risk Assessment (PRA). The PRA is discussed in Chapter 15 (Eide, Khericha, and Thatcher 1991). In summary, the accident would not be a threat to the public and would not be an uncontrolled radiological hazard in the plant.

9.1.5 Cranes

9.1.5.1 Canal Cranes. The three permanently installed cranes serving the ATR canal area (Drawing No. 422433) are designated ATR 670-C-2, -3, and -9. Crane C-2 is a bridge and trolley type sized to access most of the canal and adjacent floor area. Crane C-9 is a smaller unit on the same trolley as C-2. Crane C-3 is a radial arm (jib) type used to move materials between the canal and the main reactor room. Crane C-3 has motor-powered lift and trolley travel and a hand crank gear drive for arm rotation. Characteristics of the cranes are shown in Table 9.1-3.

9.1.5.2 Reactor Main Floor Cranes. The two permanently installed cranes serving the ATR reactor main floor (drawing 121111) are designated ATR 670-C-1 and -4. Crane C-1 is an overhead bridge crane sized to access the reactor and adjacent floor area. It consists of a main hoist (40 ton) and an auxiliary hoist (10 ton). Crane C-4 is a smaller overhead underhung trolley bridge crane (2 ton) located above crane C-1 and is sized to access the reactor and reactor room side of the working canal. Characteristics of the cranes are shown in Table 9.1.4.

9.1.5.3 Safety Evaluation. Crane operation is conducted in accordance with DOE-ID Order 440.C (DOE-ID 2002), which is met by PDD-600, "*Site Maintenance Management Program*," (INEEL 2003). The manual includes detailed requirements on crane operator qualifications, signaling practice, design safety factors on specific components, design features on specific components, testing procedures, testing intervals, visual inspection, rigging configurations, and other subjects.

Height, weight, and location limits for various canal and reactor main floor crane operations have been developed and are considered in conjunction with the applicable accident analyses in Chapter 15. These limits are contained in the ATR Building Lift Book.

Table 9.1-1. Fuel storage and handling drawings.

Drawing No.	Drawing Title	Function Category[a]
020105	ETR[b] Canal Storage Grid for 225 mm Containers Assembly (bucket grid) (Grid is shown on Drawing No. 415863)	1
020623	ETR[b] Canal Basket Storage Rack Assembly & Details (S & T basket grid) (Grid is shown on Drawing No. 415863)	1
035603	ATR Canal General Storage Grid #2 Assembly & Details (Grid is shown on Drawing No. 415863)	1
035713	ATR Canal Fuel Storage Rack Assembly (Grid is shown on Drawing No. 415863)	1
117015	Poison Fuel Storage Rack Assembly (Grid is shown on Drawing No. 415863) (117015 ≡ CPP 409024)	1
120787	ATR Spent Fuel Element Canal Storage Rack General Arrangement (Grid is shown on Drawing No. 415863) (120787 ≡ ATR...MS-112)	2[c]
409820	ATR Working Canal Experiment Storage Rack (Grid is shown on Drawing No. 415863)	1
415863	X basket grid (Drawing No. shows grid maps only; no dimensions)	1
402878	ATR-ETR Fuel Element Stagnation Column Assembly (see also 021532 ATR-ETR Fuel Element Stagnation Column Assembly and Details)	1
120769	Reactor Building Miscellaneous Storage Racks	1
415304	ATR Working Canal Experiment Modified Storage Rack	1
420722	ATR Working Canal Experiment Temporary Storage Plates and Storage Rack Assembly	1
035042	ATR-ATRC Fuel Element Transport Rack Assembly	2
120788	Canal Transfer Device Arrangement	2
035599	ATR Canal General Storage Grid #1 Assembly & Details (Grid is shown on Drawing No. 415863)	3
419947	ATR Inpile Tube Storage Rack Assembly (Grid is shown on Drawing No. 415863)	3
120772	Reactor Building Underwater Saw and Table Plan and Sections	4
156504	Ion Exchange Units Flow Diagram	4
120108	Reactor Building, First Basement Plan	4
120110	Reactor Building, Section A-A	4
156496	Cooling and Sterilizer Flow Diagram	5
156511	Cooling and Sterilizer Schematic (wiring)	5

a. 1 = Stationary fissile material storage devices

2 = Devices for movement of fissile material

3 = Nonfissile material storage and transport devices

4 = In-canal equipment other than 1, 2, and 3

5 = Out-of-canal equipment.

b. Originally designed for the Engineering Test Reactor.

c. Typically used to store dummy fuel elements, but could be used to store ATR fuel elements.

Table 9.1-2. Criticality scenarios[a].

Criticality No.	and Scenario	Technical Safety Requirement Protection
1a	The fuel element storage grid positions are overbatched with more than one fuel element (intact fuel element).	None. Scenario is not credible.
1b	Fuel elements containing > 1085 g U-235 are inserted in the fuel element storage racks.	None, the fuel element U-235 content is controlled by the fabrication process and limitations on the fuel element shipping container.
1c	Fully loaded ATR fuel element racks are placed in juxtaposition.	None. Shown safe in UFSAR reference Stuart (1998).
1d	The fixed poison (cadmium) in the fuel element storage rack grid plates is depleted.	None. Shown safe in UFSAR reference Stuart (1998).
1e	A fuel element is dropped on top of a fully loaded fuel element storage rack.	None. Shown safe in UFSAR reference Stuart (1998).
1f	ATR fuel elements are disassembled and the plates stored "loose" in either "New" or "CPP" type fuel element storage racks.	Double contingency is met by TSRs with independent verifications on mass and spacing limits.
2a	Seven or more ATR fuel elements are removed from approved storage and assembled on the canal floor or in unapproved storage.	Double contingency is met by TSRs with independent verifications on fuel to be placed only in approved racks (spacing control) and on amount of fuel out of racks (mass control).
2b	A fuel element storage grid containing seven or more ATR fuel elements is moved by mechanical means. The fuel element storage grid is tipped over, and the fuel elements fall to the floor.	Movement of storage grids containing any ATR fuel elements is prohibited by the TSR.
2c	Deleted; SPAF elements no longer processed	
2d	Deleted; SPAF elements no longer processed	
2e	Deleted; SPAF elements no longer processed	
2f	Deleted; SPAF elements no longer processed	
2g	Seven or more ATR fuel elements are assembled on the capsule tray.	Scenario is same as 2a.
3a	A cask is moved over a loaded fuel element storage grid. The cask is dropped on the grid due to crane or cable failure.	Double contingency is met by TSRs with independent verifications on rigging and on movement routing. For this scenario, spacing is the only available control parameter.
3b	The cask poison insert of the ATR spent fuel element transfer cask is damaged while loaded, or the cadmium is depleted through corrosive action.	None, ATR spent fuel cask loading and handling is controlled by the ATR spent fuel transfer cask transportation plan.
4a	A heavy load is moved over or next to the experiment wall bracket. The load drops and disturbs the experiments so the lower section of the experiments move together.	Double contingency is met by TSRs with independent verifications on rigging and on movement routing. For this scenario, spacing is the only available control parameter.

Table 9.1-2. (continued).

	Criticality No. and Scenario	Technical Safety Requirement Protection
4b	More than 820 g of U-235 are placed in the ATR canal storage buckets	Double contingency is met by a TSR with two independent verifications on fissile material loading. For this scenario, mass is the only available control parameter.
4c	Buckets containing fissile material are removed from the bucket grid and placed in juxtaposition to other buckets containing fissile material.	Double contingency is met by TSRs on minimum spacing between units not in approved storage and on mass of fuel outside approved storage.
5a	More than 820 g of fissile material contained in capsules or other experimental containers are placed on the capsule tray.	Double contingency is met by TSRs with independent verifications on mass and spacing limits.
5b	More than 820 g of fissile materials (capsules) are stored, transported, or worked on in a trash bucket or other unauthorized storage container.	Double contingency is met by TSRs with independent verifications on fuel only in approved storage (spacing control) and on amount of fuel out of approved storage (mass control).
5c	A large piece of beryllium is placed next to a fully loaded experiment holder (six experiments with 2,000 g U-235 each).	None. Shown safe in reference Abrashoff (1980).
5d	Two experiments containing fissile material are moved in juxtaposition during an experiment transfer.	Double contingency is met by TSRs on minimum spacing between units not in approved storage and mass of fuel outside approved storage.

a. Mobley (1994)

Table 9.1-3. Advanced Test Reactor canal cranes.

Characteristic	Crane		
	C-2	C-3	C-9
Load rating, tons	30	2	5
Bridge travel, ft-in.	154-8	NA	154-8
Trolley travel, ft-in.	34-4	14-2.75	34-4
Jib rotation (hand crank), degrees	NA	180°	NA
Lift, ft-in.	56-8	31	56-8
Lift speed, high/low, ft per minute	10/7	10/3	18/6
Trolley speed, ft per minute	50.5	10	50.5
Bridge speed, ft per minute	49.3	NA	49.3

Table 9.1.4. Advanced Test Reactor main floor cranes.

Characteristic	Crane		
	C-1 (main)	C-1 (auxiliary)	C-4
Load rating, tons	40	10	2
Bridge travel, ft-in.	100	100	80
Trolley travel, ft-in.	70	70	29
Lift, ft-in.	81	81	90-6
Lift speed, high, ft per minute	10	29.7	33.7
Trolley speed, ft per minute	50	50	28.3
Bridge speed, ft per minute	50	50	52.3

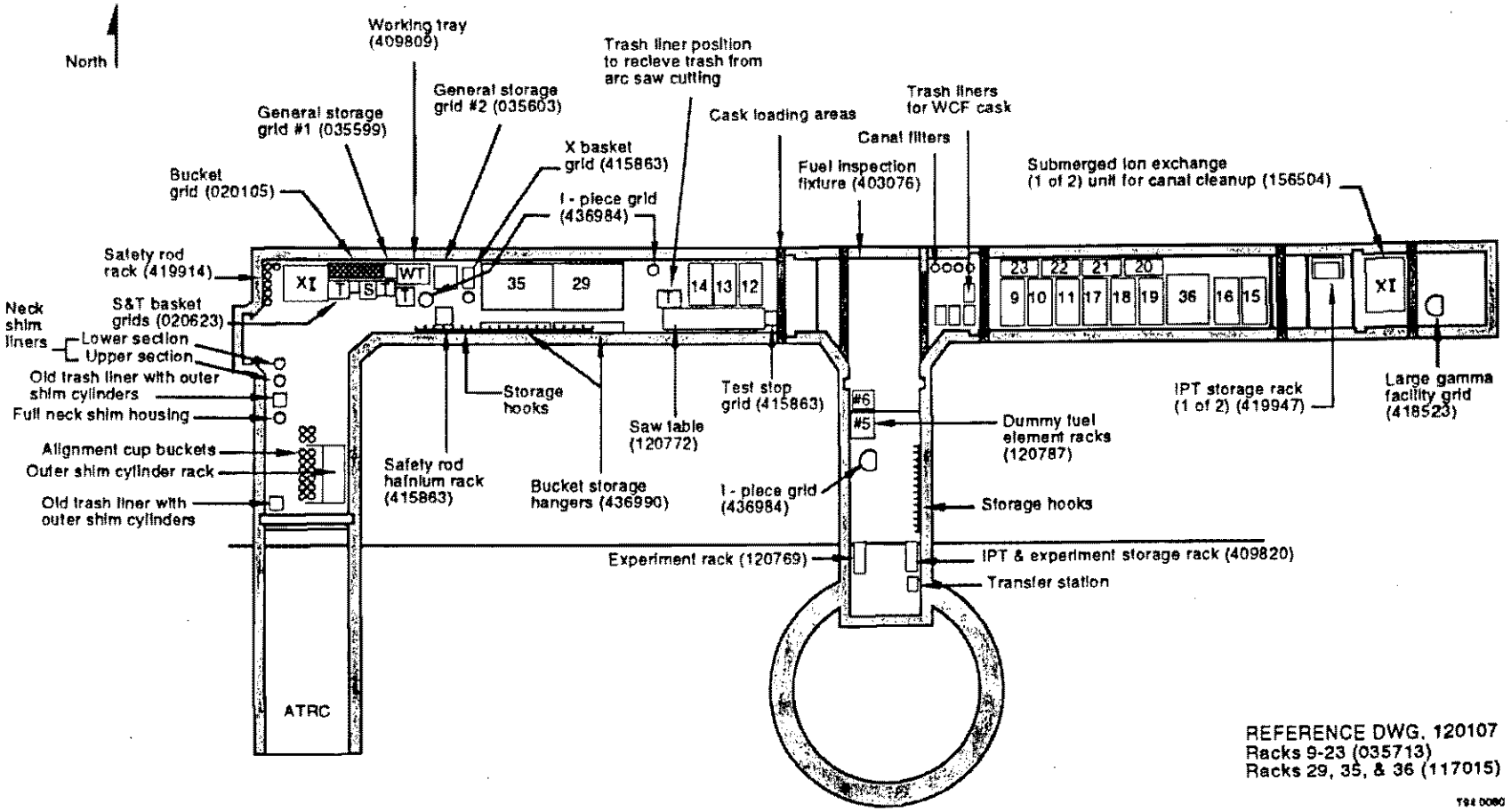

Figure 9.1-1. Advanced Test Reactor Canal. **(For Information Only)**

9.2 Auxiliary Water Systems

The ATR auxiliary water systems characteristics are summarized in Table 9.2-1. The table includes information for the major parts of all of the ATR water systems except the primary coolant system, the canal, canal cleanup and cooling, emergency firewater injection system, experiment systems, and radioactive waste systems. The excepted systems are described in other sections in conjunction with related subjects. The sequence of listing systems in the table is similar to the water flow sequence, i.e., beginning with well water, continuing to and through storage, distribution, and process systems. Some controls, indicators, and annunciators for these systems are on the process distributed control system (DCS) in the reactor control room. The water systems description summaries below are in approximately the same order as the systems in Table 9.2-1.

Parts of some systems in Table 9.2-1 are safety-related. The safety-related partial systems are summarized after the system descriptions. The firewater distribution description includes only the water supply, not fire protection. Fire protection details are in other sections of this chapter and Chapter 13 (Management, Organization, and Institutional Safety Provisions).

9.2.1 Raw, Fire, and Domestic Water

The Test Reactor Area (TRA) raw water and firewater systems supply a continuous flow of raw water to various facilities including the cooling tower, the demineralizer plant, miscellaneous cooling services, fire protection, and potable water services. See Figures 9.2-1 and 9.2-2 for simplified diagrams of the ATR raw water and firewater systems. Part of the raw water and firewater systems are safety-related. The nonsafety-related portions of the supply system in these two figures are indicated by cross-hatching.

Raw water is drawn from three deepwells located along the north perimeter of the TRA by pumps that discharge into three 375,000-gal ground-level storage tanks. Water from the three 375,000-gal tanks supplies by gravity flow four feedwater pumps, one electric- and two diesel-powered firewater pumps, and the two ATR cooling tower makeup pumps. The feedwater pumps supply the 150,000-gal overhead storage tank. The ATR cooling tower makeup pumps are used to fill the 1,000,000-gal ground level storage tank (TRA-781). There are two diesel firewater pumps (688-M-1 and 688-M-2) that are located east of the ATR cooling tower. The pumps take suction from the dedicated firewater storage tank, TRA-781, through separate supply lines.

The 150,000-gal overhead storage tank supplies water to the plant demineralizer, the firewater loop, and the TRA raw water distribution system. The TRA raw water distribution system supplies the various TRA facilities, including the ATR. Potable water is separated from the raw water downstream of the overhead storage tank and backflow from the raw water downstream of the potable water take out is prevented by check valves.

The TRA firewater distribution system consists of the 3 raw water ground level storage tanks, the raw water overhead tank, the firewater storage tank, 5 firewater pumps, and the underground fire main system. The firewater mains are distributed throughout TRA in a continuous loop. It is designed so that any segment of the firewater mains can be isolated without affecting any primary flow path. Each of the pumps and water storage tanks provide an adequate water supply for fire protection. The firewater pumps automatically start on low pressure. Varied pressure setpoints and time delays are used to avoid simultaneous starting of multiple firewater pumps. The firewater loop supplies the yard irrigation systems and emergency core cooling for the ATR reactor, in addition to fire protection and suppression functions.

The raw water leaving the ATR building merges with the cooling tower makeup at the pumphouse. This water either enters the cooling tower water basin or flows to the cold waste discharge line. Cooling tower makeup water is also used to fill the million gallon firewater tank (TRA-781). This insulated firewater storage tank is normally stagnant and provides additional water for fire protection and suppression demands.

9.2.2 Demineralizer System

Raw water from the 150,000-gal overhead storage tank is supplied to the demineralizer system, first to the water softeners. Next, after the water softeners, the reverse osmosis units remove approximately 90% of the suspended particles. The flow is then routed through small mixed bed resin tanks for final cleanup and sent to two 100,000-gal storage tanks. From the tanks, demineralized water is supplied to four transfer pumps for distribution to the ATR LDW and other TRA facilities.

9.2.3 Secondary Coolant System

Secondary coolant flow capacity of 34,400 gpm is provided by four vertical turbine pumps (8,600 gpm each) at 63 psig pump discharge pressure. The secondary coolant pumps are located in the cooling tower pumphouse (TRA-671) and take suction from the coldwell that is directly connected to the cooling tower basin. The secondary coolant flow is maintained by operating two to four pumps. Individual pumps discharge to a 36-in. diameter header in the cooling tower pumphouse. The combined pump flows then pass through the secondary flow control valve. The valve is equipped with a minimum flow stop that prevents full closure. The reactor inlet temperature can be controlled by changing the position of the secondary coolant flow control valve on the process DCS. Secondary coolant water is divided from the 36-in. heat exchanger inlet header through five 20-in. lines into the shell side of the reactor primary heat exchangers. A representative secondary coolant temperature condition is that with reactor power at 150 MW, the secondary coolant water exits from the heat exchangers at about 128°F. Exit flow from the heat exchangers is routed through a 36-in. pipe to the 42-in. cooling tower header located north of the cooling tower (TRA-771). The cooling tower header directs the flow through 24-in. branch lines over a four cell, induced draft cooling tower where the secondary coolant heat is dissipated to the atmosphere, or through two 24-in. branch lines to the cooling tower basin. The 24-in. valves in the branch lines are motor operated and are controlled from the process DCS. Through the cooling tower the coolant temperature is lowered to approximately 85°F.

The four induced draft cooling tower fans are driven by individual electric motors with variable speed controllers. The motors are on commercial power. Controls, indicators, and annunciators are on the process DCS in the reactor control room. The reactor inlet temperature can also be controlled by changing the speed of the cooling tower fans on the process DCS.

Representative secondary water losses at 150 MW reactor power are evaporation, 1,000 gpm; windage and carryover, 100 gpm; and blowdown, 150 gpm. Solids concentration in the secondary coolant increases because of evaporation. Blowdown flow is necessary to maintain the solids at an acceptable concentration. Blowdown water flows to the TRA cold waste pond, TRA-702.

Cooling tower makeup water is normally provided by gravity flow. Two pumps are available to supplement the flow provided by gravity. Individual pump capacities are 2,500 gpm. The pumps are supplied by the raw water system. Additional cooling tower makeup water is provided by the raw water discharge from the loop cubicle air chillers and by the canal recycle system cooling water.

The secondary piping has thermometer and pitot tube test connections for use in performance measurement to determine when shell side chemical cleaning is required. The piping also includes designated connections for chemically cleaning the shell side of the primary heat exchangers.

9.2.3.1 Chemical Treatment. The secondary coolant system chemical addition system consists of an 8,000-gallon carbon steel tank and flow control valves to inject concentrated sulfuric acid to control the secondary coolant pH.

Ferrous metal corrosion and scaling inhibitor are added to the secondary coolant water by the corrosion inhibitor injection system, which consists of two 1,600-gallon poly tanks and two chemical proportioning pumps.

Biological fouling of the cooling tower and the shell side of the primary heat exchangers is minimized by the biocide generation system, which consists of two 850 gallon poly tanks and a control system which injects chlorine dioxide (ClO_2) solution to the secondary coolant water.

9.2.4 Utility Cooling Water (UCW)

The major components in the UCW system, in addition to piping, are (a) two vertical turbine pumps, (b) the high-pressure demineralized water (HDW) heat exchangers, and (c) the diesel generator auxiliary cooling heat exchangers.

Two vertical turbine UCW pumps (one a spare) take suction from the deepwell portion of the cooling tower coldwell and discharge into the UCW header in the cooling tower pumphouse.

The UCW header exits the cooling tower pumphouse and enters the reactor building first basement. At this point, a line with a flow control valve connects the UCW header and the reactor primary heat exchangers shell side (secondary coolant) inlet header. The flow control valve in the connecting line regulates the flow of UCW at 1,500 gpm to the secondary system in the event of a commercial power failure of the secondary pumps. A check valve normally prevents secondary coolant flow into the UCW system. This system has been used in the past as an alternate decay heat removal system. However, no credit is taken for this system in the Chapter 15 long-term loss of heat sink analysis. The loss of heat sink accident is classified as an anticipated event and the event is mitigated by the use of two Engineered Safety Features: the Emergency Firewater Injection System and the Vessel Vent System.

In the reactor building the UCW header supplies two lines, one to the shell side of the HDW heat exchangers and the other to the shell side of the diesel generator heat exchangers. Typical flow values are 2,050 gpm to the series-connected HDW heat exchangers and 1,000 gpm to the diesel generator heat exchangers. UCW flow to the HDW heat exchangers is controlled by a manually operated flow control valve. On loss of commercial power, a solenoid valve trips the flow control valve to a 1,050 gpm stop.

The UCW line to the diesel generators is joined by a firewater line. A pressure control valve in the firewater line opens on low UCW pressure to provide firewater to cool the diesel generators. The pressure control valve must be manually reset once it has been tripped.

9.2.5 Low-pressure Demineralized Water

The LDW is supplied to the ATR by demineralized water transfer pumps in the demineralizer building via a 10-in. supply line. The LDW water supplies the laboratory sinks, emergency pump suction line, canal quick-fill line (transfer canal), primary degassing tank, bypass demineralizer system and bypass demineralizer sampling sink, canal purge supply line, canal recycle makeup line, canal recycle return line, gland seal supply line, canal emergency makeup line, HDW system, sample preparation laboratory, health physics laboratory, safety relief valve test stand, naval reactor makeup system #1 and #2, canal ARC saw, reactor transfer tube, warm waste treatment facility, diesel jacket cooling water, loop cubicles, upper and bottom head firewater injection system flush, various hose stations, ATRC canal service line, and N-16 system.

Demineralized water for the TRA is produced and distributed from the Demineralizer Building TRA-608. The demineralized water system is comprised of four water softeners, three reverse osmosis units, four banks of six each small mixed bed resin tanks, two 100,000-gal water storage tanks, two 500 gpm water transfer pumps, and two 1,000 gpm reactor flush pumps.

Figure 9.2-3 shows a simplified diagram of the LDW. Part of the system is safety-related. The nonsafety-related portions of the system are indicated by cross-hatching.

9.2.6 Gland Seal Water and Warm Seal Water

The gland seal water system includes a 3,000-gal feed tank, two pumps, and gland seal stations on the reactor. As shown in Figure 9.2-4, the feed tank receives makeup from three sources: (a) the bypass demineralizer purge water, (b) the N-16 demineralized water return, and (c) LDW. The two gland seal water pumps take suction from the feed tank and provide pressurized water to the top head pressure tube seals, the outer shim drum drive seals, primary coolant pump seals, the emergency coolant pump seals, and the reflector cylinder position indicators. Local flow indications are provided at flow control stations in the first and second basements.

A crosstie from gland seal water to warm seal water provides flow to the warm seal water system during reactor shutdown when the warm seal water pumps are out of service. A crosstie from the N-16 demineralized water provides flow to the gland seal water system when the gland seal water pumps are out of service. The N-16 crosstie is normally not in service, and a blind flange has been installed.

The two warm seal water booster pumps take suction from the return line of the bypass demineralizer where radioactive contamination of the water is of a lower value. These pumps provide sealing water to the bottom head pressure tube seals, the safety rod drive seals, the safety rod snubber tube flushing connection, the neck shim drive housing seals, and the bottom head flush line. Local flow indications are provided at flow control stations in the first and second basements. Figure 9.2-5 is a simplified schematic of the gland seal/warm seal system.

During a normal reactor shutdown when the reactor primary system is depressurized, the gland seal water system can supply the warm seal water system. A check valve prevents backflow of warm seal water to the gland seal water system. During normal operation, one pump is in operation with the other in standby condition.

9.2.7 N-16 Demineralized Water

The N-16 system may be supplied with either LDW or Bypass Demineralizer effluent. Supply water enters the N-16 system after a pressure regulating valve reduces the pressure to 20 psig. The line branches into two lines, each with a strainer. The lines then combine into one line to the suction side of the two N-16 pumps. The N-16 pumps provide pressurized water to the powered axial locator mechanism for cooling and the N-16 monitoring system. Pump discharge check valves prevent reverse flow if one pump is on standby. Crossties are described under gland seal water and warm seal water.

The N-16 power monitoring system piping separates the LDW or Bypass Demineralizer effluent supply water into ten individual flows and routes each of these through tubes located in different regions of the ATR core. While passing through the core, the individual flows undergo activation through the O-16 (n,p) N-16 reaction. Each flow is then directed to its respective beta chamber for counting. The activity of a given flow is an indication of the power in the region of the core in which that flow was activated. After counting, the flows are recombined and return to the gland seal water tank.

Flow controls and indications for the N-16 system are provided locally at the pump motor floor area above the hot and warm waste tanks, and locally at the N-16 pumps. N-16 pumps may be controlled locally or from the DCS.

9.2.8 Reactor Bypass Demineralizer

The reactor bypass demineralizer system is designed to continuously purify a diverted portion of the primary coolant. The reactor bypass demineralizer system includes two cation units and two anion units. The 6-in. inlet line connects to the reactor primary coolant system piping downstream of the main reactor butterfly flow control valve. A restricting 2.5-in. orifice, FE-37, in the inlet line limits maximum flow in the event of a break in the bypass demineralizer piping.

Flow leaving the demineralizer passes through an 80-mesh effluent filter and is then returned to the pump suction header of the primary coolant system. Immediately after the effluent filter, the piping tees, which supplies Bypass Demineralizer effluent to the N-16 system.

9.2.9 Safety-Related Systems

The selection and identification details of the ATR safety-related systems that are not part of the reactor shutdown system are contained in Chapter 3 (Design of Structures, Components, Equipment, and Systems). Of the auxiliary water systems, part of the LDW system, part of the N-16 water system, and the water supply for the emergency firewater injection system (EFIS) are safety-related.

The only designated safety function of the LDW system is to provide water make-up in the event of canal leakage. If electrical power for pumps is not available, the safety-related portions of the LDW system provide gravity driven canal make-up. Flow is from the two 100,000-gal demineralized water storage tanks through the canal quick-fill line or through the makeup line (BL-8-442). Either of these capabilities may be used depending on the location of stored, irradiated fuel elements.

The portion of the LDW system necessary to accomplish the safety function extends from the irradiated fuel storage portion of the entry into the ATR canal to the demineralized water storage tanks. The safety-related and nonsafety-related parts of the system are shown in Figure 9.2-3; a listing of safety-related components is contained in Appendix A of Chapter 3. The storage tanks constitute the demineralized water supply for the entire TRA area. The safety-related/nonsafety-related boundary of the LDW system is formed by valves that are either normally closed or that can be closed to isolate any pipe break in the nonsafety-related portion of the system. The piping run from demineralized water tanks to the ATR canal is bounded by the valves listed in Table 9.2-2. The listing in this table and the components shown in Figure 9.2-3 do not include small lines (e.g., instrument lines) and valves that are one-half in. and less. It is considered improbable for these components to negatively impact the performance of the system.

The effects of potential failures in the LDW on plant operation are considered in Section 15.11.6. Failures during normal operating conditions can result in operating anomalies, but they do not become initiators for off-normal events except for long-term operator inaction. Although the canal emergency firewater makeup system is normally chosen as the primary source of makeup to the canal irradiated element storage area, the LDW system can provide the safety function. Failure of the LDW during a significant canal draining event is a low probability event that is considered beyond the design basis (Section 15.8.4.2). The analysis of the canal draining events establishes an enveloping value of 13 gpm makeup to the canal to compensate for bulkhead leakage and evaporation to dissipate decay heat from the irradiated fuel elements (Stueve and Ghan 1998). Although LDW makeup pumps are normally in service to maintain the system pressure, the enveloping flow to the canal can be provided by gravity flow (Stueve and Ghan 1998). There will be the required 24 hours of forced or gravity flow (24 hours is considered a reasonable response time following an off-normal event to either stabilize canal level or provide additional makeup sources) when a level of 20 ft is maintained in the LDW storage tanks (Stueve and Ghan 1998). Emergency firewater makeup to the ATR canal is an independent system and in combination with the LDW emergency canal makeup, lower the fuel damage frequency in the canal to $< 10^{-7}$ events/year.

The LDW system was designed and constructed using the Uniform Building Code in effect at the time of construction. The accident analysis indicates that the canal does not fail as the result of the safe shutdown seismic event. Therefore, there is no demand on the LDW for makeup as the result of seismic events, and special seismic requirements do not result from safety considerations. The use of limited seismic requirements in the system design is not a compromise to the reliability of the LDW system.

Emergency firewater makeup is provided as a redundant and independent makeup water supply to the spent fuel storage area of the ATR canal. Emergency firewater makeup to the ATR canal is a low flowrate system designed to provide makeup water for leakage and evaporative losses (13 gpm) from the spent fuel storage area of the ATR canal.

The N-16 power monitoring system provides the reactor lobe power indication. The lobe powers are considered in the safety analysis and must be controlled consistent with the safety analysis. Signals proportional to power are generated from counting N-16 beta activity in water that has passed through the reactor core. The processing of the signals from the beta counting chambers is discussed in Chapter 7 (Instrumentation and Controls). The N-16 flow system from supply station 11 (N-16 flow transmitter) through the outlet of the beta chambers is safety related. The safety-related/nonsafety-related boundary of the N-16 flow system is shown in Figure 9.2-6. Safety-related/nonsafety-related boundary components are listed in Table 9.2-4 and detailed in Chapter 3 (Design of Structures, Components, Equipment, and Systems.)

The EFIS supply for the ATR is from the TRA raw water and firewater system as shown schematically in Figures 9.2-1 and 9.2-2. The EFIS supply includes three 375,000-gal storage tanks, 1,000,000-gal storage tank, four diesel-powered firewater pumps, one electric motor powered firewater pump, a 150,000-gal overhead storage tank, and associated piping.

The four diesel-powered pumps are 633-1 (No. 1), 619-11 (No. 2; engine is 619-10), 688-M-1, and 688-M-2. Each Diesel engine has two 24-volt batteries for starting purposes and a battery charger to maintain the charge on the batteries. The starting circuits attempt engine start for 15-second intervals switching between batteries for each attempt. There is a 15-second pause between each attempt. These solid-state crank controls are a part of the Fire Pump Controller.

Each diesel firewater pump is equipped with a dedicated diesel fuel storage tank.The Fire Pump Controllers, the batteries with chargers, the fuel tanks, the piping from the tanks to the engine, and the isolation valves are necessary for the successful operation of the firewater pumps. These components are safety-related.

The boundaries of the safety-related portion of the raw water and firewater supply system are somewhat complex since the overall raw water and firewater supply system interfaces with several other subsystems. In general, the boundary for the safety-related portion is a valve on the inlet to the nonsafety-related pumps. Similarly, single isolation valves form the boundary of the safety-related system at other locations, such as interfaces on the firewater distribution loops.

The 150,000-gal overhead storage tank, the three 375,000-gal ground level tanks, and the one 1,000,000-gal ground level tank constitute the supply for all water needs of the TRA area, including fire protection and suppression, potable water, irrigation, chill water, and supply to the EFIS. The boundary between the nonsafety-related water systems and the EFIS supply system is formed by valves that are either normally closed or closed in the event of a pipe break in the nonsafety-related portion of the system. The valves that constitute the safety-related/nonsafety-related boundary of the emergency firewater injection system are listed in Table 9.2-3; a listing of safety-related components is found in Appendix A of Chapter 3.

The effects of potential failures in the firewater supply are considered in Section 15.11.10. During normal operation, the failure of the supply does not initiate an off-normal event. The supply is required for mitigation of certain off-normal sequences. The enveloping requirement for firewater supply in the long-term is established at 530 gpm by analysis in Sections 15.6.10.4.2 and 15.9.2.1.2. The discussion in Sections 15.6.10.4.2 and 15.9.2.1.2 shows that the EFIS is capable of this flow rate. The analysis of off-normal events assumes a flow consistent with a pressure of 60 psig at the lower actuation valves and 43 psig at the upper valves.

9.2.10 ATR Chemistry Control and Process Water Sampling

9.2.10.1 ATR Chemistry Control. The makeup water to the reactor is purified by passing well water through a strong-acid ion exchange resin to remove soluble cations, a de-carbonator to remove carbon dioxide gas, and a Type II strong-base ion exchange resin to remove soluble anions. In addition, water from the primary coolant system is continuously passed through another set of Type I cation and anion exchange resins in the bypass demineralizer system to provide additional on line purification.

The pH of the purified coolant is kept slightly acidic to minimize the formation, transportation, and deposition of aluminum corrosion products and to reduce aluminum fuel cladding corrosion rates. The pH is adjusted in the ATR by bypassing a part of the acidic effluent from the cation exchangers around the anion exchangers.

9.2.10.2 Process Water Sampling. Routine process water sampling provides the information required to control the chemistry of the ATR water systems and the concentration of contaminants. Actions to maintain ATR water system chemistry and limit the concentration of contaminants are necessary to (a) minimize corrosion of the aluminum fuel cladding, (b) reduce radioactive contaminants, shielding requirements, and personnel exposure, and (c) control the buildup of oxides on fuel cladding. Routine sampling also provides the information required for corrective actions and response following a fission break resulting in the release of fuel or fission products to the ATR primary coolant system.

ATR process water sampling is accomplished manually by means of grab samples or automatically by online equipment as necessary for chemical and radiological monitoring and analysis. Chapter 5 (Primary Coolant System) discusses PCS water chemistry requirements.

Secondary Coolant System (SCS) monitoring is performed by measuring the gross beta and gamma activity in SCS samples. Chapter 12 discusses radiation protection and SCS activity limits.

Table 9.2-1. Auxiliary water systems.

System (Flow Diagram)	Pump(s) or System Function	Pump No.	TDH[a] (ft)	Flow (gpm)
Raw and firewater supply (445139)	Fill three 375,000 gal storage tanks	#1 well	515	3180
		#3 well	520	4180
		#4 well	530	2000
	To ATR well water system (442522), fills 150,000 gal overhead storage tank, to fire loop, to and through demineralizers filling two 100,000 gal demin. storage tanks	619-6	230	850
		619-7	230	850
		619-9	230	1000
		619-1	230	900
		619-2[d]	110	1300
		619-3[d]	110	1300
	ATR cooling tower makeup; 1 pump is spare	619-M-1	70	2500
		619-M-2	70	2500
	Firewater flow and pressure	633-1[b]	290	6500
		619-12	200	5100
		619-10[b]	259	3500
Firewater tank and pumphouse (181356)	1,000,000-gallon firewater storage tank, firewater flow and pressure	688-M-1[b]	290	2500
		688-M-2[b]	290	2500
Raw, fire, and domestic water system (442522) (this is the ATR well water system)	ATR building, cooling tower and area firewater, well water to domestic water, to sprinklers, to miscellaneous services, to reactor emergency cooling, to Utility cooling water fill	None		
TRA firewater system (410219)	Firewater distribution for all of TRA, EFIS supply, diesel cooling on loss of UCW	None		
TRA-608 demineralizer system (513287)	To low pressure demineralized system (120884) and TRA facilities from the two 100,000 gal storage tanks	608-18	75	1000
		608-19	75	1000
		608-20	186	500
		608-21	186	500
Secondary coolant system (414726)	Ultimate heat sink for reactor and Utility Cooling Water (UCW) System heat loads	671-M-1	145	8600
		671-M-2	145	8600
		671-M-3	145	8600
		671-M-4	145	8600

Table 9.2-1. (continued).

System (Flow Diagram)	Pump(s) or System Function	Pump No.	TDH[a] (ft)	Flow (gpm)
Chemical treatment systems (449528)	Acid addition to secondary coolant for pH control	None		
	Corrosion inhibitor addition to secondary coolant	671-M-61 671-M-62	PD[c] PD	0.012-1.1 gph 0.012-1.1 gph
	Chlorine dioxide (ClO_2) addition to inhibit biological fouling	None		
Utility cooling water system (120180); pumps are on drawing 414726	Cooling for high pressure demineralized water from experiment loops and for diesel generator engines; SCS Hx cooling on loss of commercial power; one pump is spare	671-M-5 671-M-6	175 175	3300 3300
Demineralized water system (120884) (this is the low pressure demineralized water system)	To ATR reactor makeup, N-16 pumps, gland seal pumps, and miscellaneous services	None		
ATR gland seal system (418962)	To outer shim cylinder drive seals, reflector cylinder position indicator, pump, and top pressure tube seals; one pump is standby.	670-M-40 670-M-41	1050 1050	55 55
	To bottom pressure tube seals, safety rod drive seals, neck shim drive housing seals, flush lines; one pump is standby. (These are supplied from the warm seal water booster pumps.)	670-M-82 670-M-83	350 350	150 150
ATR N-16 demineralized water system (418963, 120879)	To N-16 monitors, and the powered axial locator mechanism	670-M-130 670-M-131	1086 1086	30 30
Primary by-pass demineralizer system (120879)	Primary coolant on-line cleanup (Uses primary pump head for flow)	None		600

a. TDH = total dynamic head. 1 ft water ≈ 0.433 psi
b. Diesel powered
cc. Positive displacement pump
d. Pumps no longer in service.

Table 9.2-2. Boundary valves for the safety-related part of the Low-Pressure Demineralized Water System (LDW).

Valve Number	Description
	Block valve, LDW to canal distribution header
	Block valve, LDW quick fill
	Block valve, auxiliary fill line to HDW system
	Block valve, LDW to experiment loops makeup
	Block valve, LDW to N-16 pumps
	Block valve, N-16 recirculation return
	Block valves, LDW to primary bypass demineralizer
	Block valves, LDW to 2nd basement distribution header
	Block valve, LDW to 1st basement distribution header
	Block valve, demineralized water to ETR/MTR
	Block valve, LDW to degassing tank
	Block valves, demineralized water flushing pump inlet and outlet
	Block valve, pump discharge to tank supply line
	Block valve, LDW to TRA-608 lab
	Block valve, Demin Recirculation Drain Isolation
	Block valves, batch acid addition system
	Block valves, level transmitter
	Block valves
	Block valve, demineralized water to ATR diesel jacket water makeup
	Block valves, inlet lines to tanks TRA-754 and -708A

FOIA Exemption 3 UCNI, Exemption 7f

Table 9.2-3. Boundary valves for the safety-related part of the Emergency Firewater Injection System.

Valve Number	Description
	Block valves, Emergency Firewater Makeup to ATR Canal
	Isolation valves, to fire hose racks
	Block valve, firewater main to TRA-625
	Block valve, firewater main to TRA-609
	Block valve, firewater main to TRA-622
	Block valve, firewater main to TRA-614
	Block valve, firewater main to TRA-628
	Block valves, firewater main to diesel fuel storage area
	Block valve, firewater main to MTR firewater loop
	Block valve, firewater main to TRA-603
	Block valve, firewater main to TRA-652
	Block valve, firewater main to MTR firewater loop
	Block valve, firewater main to TRA-608
	Block valve, pump 619-6 inlet
	Block valve, pump 619-7 inlet
	Block valve, pump 619-12 and 619-11 recirculation
FOIA Exemption 3 UCNI, Exemption 7f	
	Block valve, pump 619-11 recirculation
	633-1 Recirculation valve
	633-1 Relief valve
	Block valve, pump 619-8 inlet
	Block valve, pump 619-1 inlet
	Block valve, pump 619-2 inlet
	Block valve, pump 619-3 inlet
	Block valve, pump 619-M-1 inlet
	Block valve, pump 619-M-2 inlet
	Block valves, Tank 719C inlet
	Block valves, Tank 719B inlet
	Block valves, Tank 719A inlet
	Block valve, Tank 718 outlet to firewater discharge header
	Pump 619-12 Recirculation
	Block valve, deepwell discharge to pump 619-11 discharge

Table 9.2-3. (continued).

Valve Number	Description
	Building 678
	Block valve, to UCW
	Block valve, to TRA-607
	Block valve, to TRA-627
	Block valve, to TRA-641
	Block valve, capped line near TRA-657
	Block valves, 670 fire sprinkler
	Block valves, firewater loop
	Buildings 617 and 618
	Building 669
	ATR Sprinkler System 5
	ATR Sprinkler system 6
	Building 640
	ATR Sprinkler system 7
	Building 634
	fire Hose Rack
	Block Valve, to ATR well water system
	Block valve, to MTR and air compressors
	Block valve, to firewater loop and demineralizer

FOIA Exemption 3 UCNI, Exemption 7f

Table 9.2-4. Boundary components for the safety-related portion of the N-16 flow system.

Component Number	Description
	Block valves, calibration header
	Block valves, beta chamber drains
	Five-way valve, spare beta chamber Five-way valve, outlet flow transmitter
	N-16 flow transmitters

CHAPTER 9 – AUXILIARY SYSTEMS - UPGRADED FINAL SAFETY ANALYSIS REPORT FOR THE ADVANCED TEST REACTOR	**Identifier:** SAR-153 **Revision:** 11 **Page:** 9-37 of 9-90 **Effective Date:** 08/10/04

CHAPTER 9 – AUXILIARY SYSTEMS - UPGRADED FINAL SAFETY ANALYSIS REPORT FOR THE ADVANCED TEST REACTOR	**Identifier:** SAR-153 **Revision:** 11 **Page:** 9-38 of 9-90 **Effective Date:** 08/10/04

CHAPTER 9 – AUXILIARY SYSTEMS - UPGRADED FINAL SAFETY ANALYSIS REPORT FOR THE ADVANCED TEST REACTOR	**Identifier:** SAR-153 **Revision:** 11 **Page:** 9-39 of 9-90 **Effective Date:** 08/10/04

CHAPTER 9 – AUXILIARY SYSTEMS - UPGRADED FINAL SAFETY ANALYSIS REPORT FOR THE ADVANCED TEST REACTOR	**Identifier:** SAR-153 **Revision:** 11 **Page:** 9-40 of 9-90 **Effective Date:** 08/10/04

CHAPTER 9 – AUXILIARY SYSTEMS - UPGRADED FINAL SAFETY ANALYSIS REPORT FOR THE ADVANCED TEST REACTOR	**Identifier:** SAR-153 **Revision:** 11 **Page:** 9-41 of 9-90 **Effective Date:** 08/10/04

CHAPTER 9 – AUXILIARY SYSTEMS - UPGRADED FINAL SAFETY ANALYSIS REPORT FOR THE ADVANCED TEST REACTOR	**Identifier:** SAR-153 **Revision:** 11 **Page:** 9-42 of 9-90 **Effective Date:** 08/10/04

FOIA Exemption 3 UCNI, Exemption 7f (Pages 9-37 – 9-42 power system drawings)

9.3 Compressed Air Systems

The ATR compressed air system consists of two separate and distinct pneumatic systems: utility air and ATR high-pressure air. Utility air supplies compressed air to ATR plant air and instrument air subsystems and to TRA facilities. Utility air is supplied from a compressed air system originating in the south wing of TRA-609. See Figure 9.3-1 for a simplified utility air diagram. The utility air system is sometimes referred to as the TRA compressed air system or the MTR-ETR compressed air plant, and also provides compressed air to the TRA facilities.

Compressors for the second compressed air system, the high-pressure air system, are located in the utility equipment area of the ATR second basement. The high-pressure air system provides a source of high-pressure air for the ATR primary system surge tank, diesel generator startup and emergency trip, and pressurization of the HDW expansion tank.

9.3.1 Utility Air

The TRA compressed air plant is the source of compressed air for the plant air and the instrument air subsystems. The interface between the TRA compressed air and the ATR air systems is described in the respective subsystem sections.

The TRA compressed air source is three compressors arranged in parallel located at TRA-609, each capable of providing 600 cfm of compressed air at 140 psig. A flow diagram of the TRA compressed air system is shown in Figure 9.3-1. The air is routed through a prefilter, a drier, and an after-filter before being discharged to three air receivers. Normally, one compressor is in continuous operation with the other two compressors automatically selected as the first and second standbys. Two of the compressors can be operated with diesel power when there is a loss of commercial power. The air driers will continue to dry for a period of time, but will not operate as efficiently because they also require commercial power (Eide, Khericha, and Thatcher 1991). A low-pressure alarm is provided to signal the decrease in air pressure.

9.3.1.1 Plant Air Subsystem. The ATR plant air system provides clean and dry compressed air for ATR utility and control air requirements. Sufficient storage capacity for compressed air is provided to supply plant air operational needs.

9.3.1.1.1 System Design and Operation—Plant air is supplied to the canal bulkhead seals. Bulkheads are provided for the working canal, storage canal, experimenters canal, and critical facility canal, all of which use plant air for the bulkhead inflatable seals. Portable, flexible hoses connect the bulkhead to air supply headers around the canal parapet. Plant air is used for the air-operated winch, located in front of the subpile room door, and for other miscellaneous equipment. Plant air is supplied to the canal level instrumentation for the in-vessel post accident monitoring system and for the canal firewater makeup system and several pre-action fire alarm systems.

9.3.1.1.2 Safety Evaluation—Failure of the plant air system will not disable safety-related equipment. Leakage attributable to failure of the bulkhead seals in the canal is mitigated by the makeup capacity of the LDW system or emergency firewater makeup (Stueve and Ghan 1998). The canal level instrumentation is provided with N_2 backup. Loss of the plant air system does not compromise the ability of safety systems to safely shut down the reactor or to provide mitigation of off-normal events; the plant air is not designated as safety-related (House 1992).

9.3.1.1.3 Codes and Standards—The ASME Unfired Pressure Vessels, Section VIII, has been used in the design and construction of the plant air system receivers (ASME 1959; Ebasco 1962a).

9.3.1.2 Instrument Air System. The instrument air system supplies clean and dry compressed air through one of two separate loops of the TRA compressed air (utility air) system with take-off connections throughout TRA-670 and other TRA buildings. Instrument air is a subsystem of the TRA compressed air system; their common features are described in Section 9.3.1. Valves and interconnections are provided to allow transfer of the compressed air between the plant air and instrument air lines in off-normal situations (Eide, Khericha, and Thatcher 1991). A diesel-powered air compressor connected to the ATR instrument air system piping will supply ATR with compressed air which may allow continued operation of ATR with normal compressors out of service. This is strictly a programmatic decision. The diesel-powered compressor is not required to safely shutdown the ATR.

9.3.1.2.1 System Design and Operation—The instrument air subsystem provides compressed air for the ATR pneumatic instrument and control functions and for the reactor instrument thimble purge. The primary purpose of the instrument air is to supply the control panels, transmitter cabinets, and cubicles with control air. Instrument air also supplies air to selected ATR system valves, all pneumatic instruments, ATR truck door seals, the vertical two-part lift door in the north wall of the reactor room between the reactor room and the storage canal room, and heating and ventilating dampers. The main exhaust dampers (BDM-1-5 and 5A) require air pressure to open or close. These dampers have nitrogen gas backup to provide motive force if instrument air is not available.

9.3.1.2.2 Safety Evaluation—Failures of instrument air resulting in off-normal sequences are described in Sections 15.5 and 15.11.7. Loss of the instrument air system does not compromise the ability of safety systems to safely shut down the reactor or to provide mitigation of off-normal events; the instrument air is not designated as safety-related (House 1992). Inflatable door seals for confinement and the vessel vent valves are backed up by compressed N_2 bottles, as discussed in Chapter 6 (Engineered Safety Features).

9.3.1.3 High-Pressure Air System. The high-pressure air system provides 285 psig high-pressure air for diesel engine startup, pressurizing the reactor primary coolant system surge tank, and the HDW expansion tank (Ebasco 1965a). A simplified flow diagram of the high-pressure air system is shown in Figure 9.3-2.

9.3.1.3.1 System Design and Operation—The cumulative receiver volume required for the highest volume and pressure air load, which was determined to be eight cold diesel engine starts, is 52.3 ft^3 (at 125 to 250 psig) (Ebasco 1962b). The storage capacity of the two high-pressure air receivers is 70 ft^3, which is adequate to supply the high-pressure air needs of ATR.

9.3.1.3.2 Safety Evaluation—Off-normal conditions for the high-pressure air system are described in Section 15.11.8. The High-pressure Air System is not needed to safely shut down the reactor or to provide mitigation of off-normal events; the high-pressure air system is not designated as safety-related.

9.3.1.3.3 Codes and Standards—The high-pressure air compressors, receivers, and supporting equipment were designed and manufactured in accordance with the American Society of Mechanical Engineers (ASME) Code for Unfired Pressure Vessels, Section VIII-1962 (Ebasco 1965a).

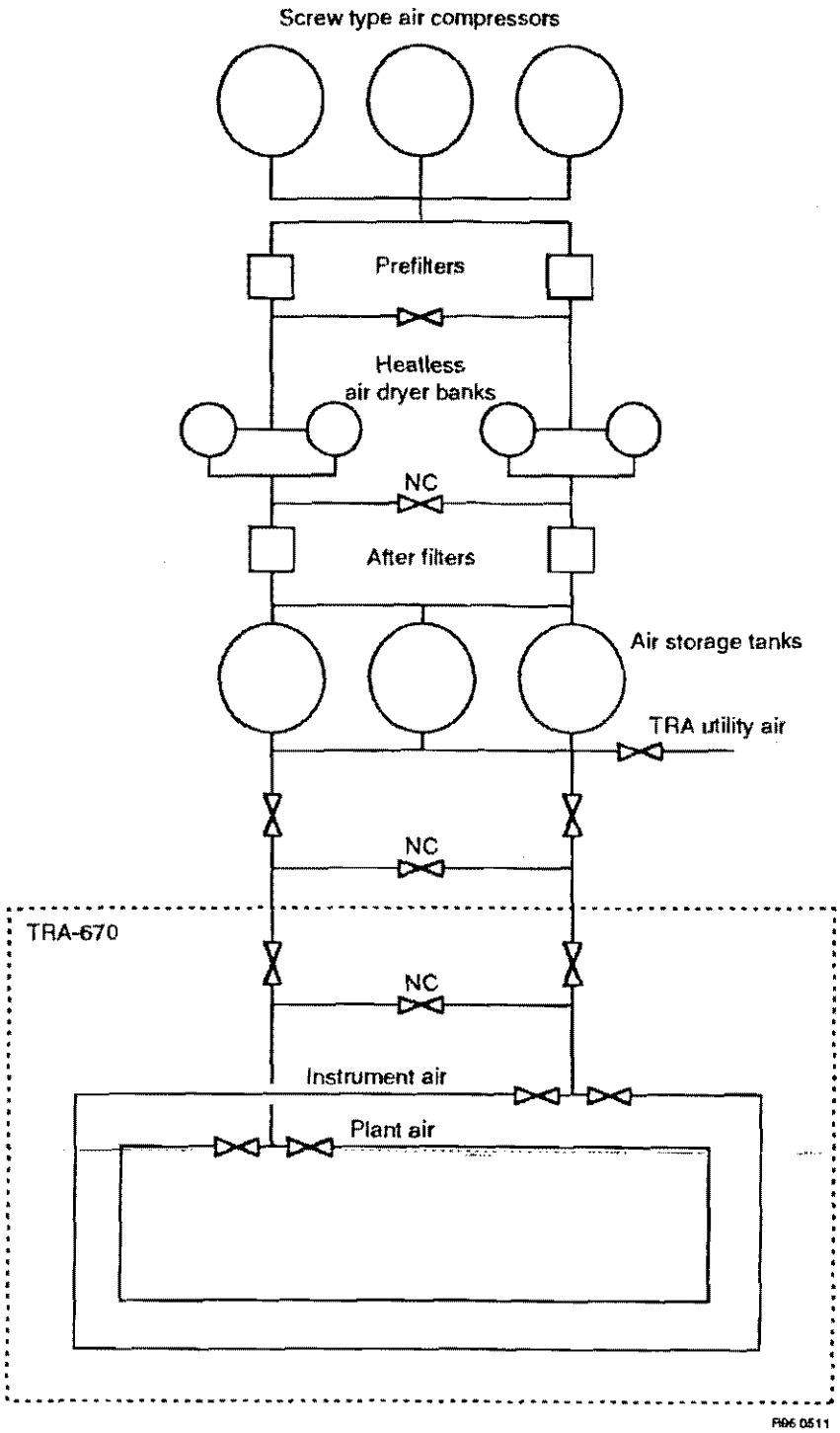

Figure 9.3-1. Simplified Utility Air Diagram. **(For Information Only)**

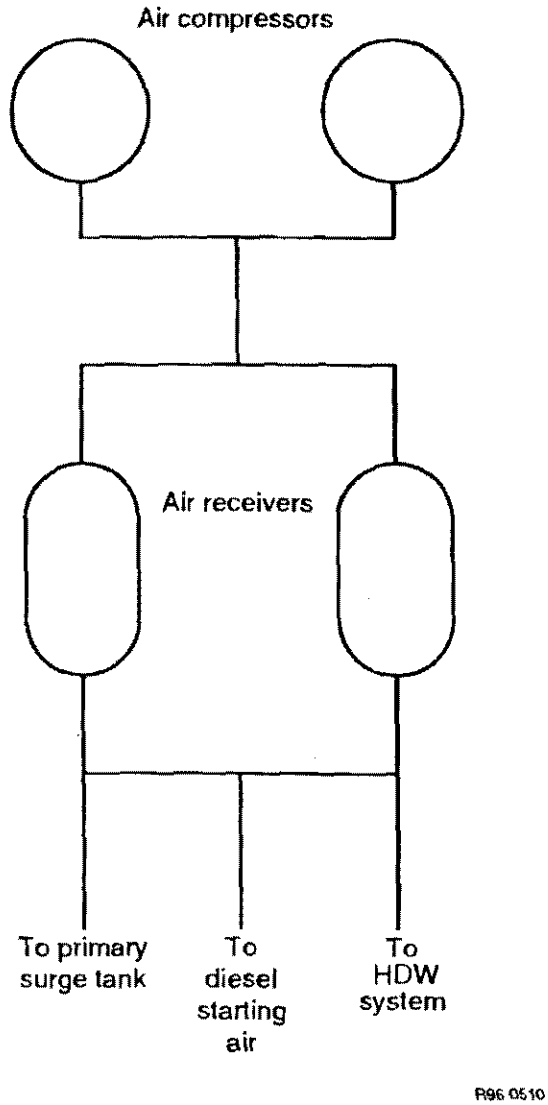

Figure 9.3-2. High-Pressure Air System. **(For Information Only)**

9.4 Heating and Ventilation

Ventilation for the principal working areas in the building is sectioned to minimize the dispersal of potential contamination from one area to another. The ATR heating and ventilation system consists of numerous fans, heating and cooling coils, primary dampers, and backup dampers distributed throughout the building. The individual ventilation components are independent of each other and can generally continue or discontinue operation without affecting other spaces. Fans and dampers controlling ventilation in specific areas are secured by the radiation monitoring and seal system (RMSS) when necessary to confine a release of radioactivity.

Not all firewall and floor heating and ventilating penetrations through fire barriers have dampers to prevent the spread of smoke in the event of fire. Since the original construction of the facility, the requirements have changed and additional walls have been added to the facility. For a discussion of the current fire protection requirements, refer to Section 9.5.1.

The HVS-1 system supplies air to the reactor operating area and first and second basements. A schematic diagram of HVS-1 is shown in Figure 9.4-1. The air is drawn from outside the building through control dampers, a filter bank, preheat electric coils, a hot water coil, and eight reheat electric coils located in ducting downstream of the blower and air washer to the main supply fan HVS-1. The speed of HVS-1 is controlled by a variable frequency drive unit. HVS-1 speed is established to maintain a negative (relative) pressure in confinement. Controls and indications for HVS-1 are on the Process DCS.

The HVS-2 system supplies air to the ATRC and offices on the west side of the reactor building. The HVS-2 system is shown in Figure 9.4-2. The HVS-3 system supplies air to the canal and laydown area. Schematic diagrams of HVS-3 are shown in Figure 9.4-3. The HVS-4 system supplies air to the east side offices. A schematic diagram of HVS-4 is shown in Figure 9.4-4. The HVS-5 system supplies air to the PCS motor room, the utility areas, and the diesel rooms. Air conditioning systems are provided for specific areas. The Reactor Control Room air treatment system, HVA-2 System, includes Isolation Dampers BDM-1, BDM-1A, BDM-2, and BDM-2A. These dampers are part of the RMSS discussed in Chapter 6 (Engineered Safety Features). These fans and dampers are controlled locally except during RMSS trips.

The following sections of this chapter describe ventilation and air treatment for the operating areas, storage canal, and waste area.

9.4.1 Operating Areas Ventilation System

The reactor operating area, the first basement, and the second basement are the operating areas discussed in this section. A schematic diagram of the Reactor Building Heating and Ventilation System is shown in Figure 9.4-1.

9.4.1.1 System Description. The HVS-1 ventilation system provides conditioned air, maintains a relative negative building air pressure, ensures air flow from areas of low contamination potential toward areas of higher contamination potential, and upon RMSS isolation, prevents the uncontrolled release of airborne radioactivity from the confinement. The equipment for the HVS-1 system is located on the second mezzanine level in the southwest corner of the building. It consists of a filtering system, electric and waste heat recovery coils, an air washer, and supply fan HVS-1.

Since the reactor operating area is part of confinement, butterfly-type dampers are installed in the supply and return air duct work to ensure integrity of enclosure on shutdown and to preclude uncontrolled leakage to the atmosphere. The butterfly dampers are automatically controlled by operation of the RMSS. The supply fans are interlocked to the RMSS and, as a backup, to the operation of the main exhaust fans; the main supply fans will be shut down on an RMS-1 trip or on shutdown of the main exhaust fans. The RMSS is an Engineered Safety Feature and is discussed in detail in Chapter 6 (Engineered Safety Features).

The main exhaust system fans are located in the equipment room on the second basement level. The two fans (one a standby) ensure continuous operation. If one of the operating fans fails, the standby automatically starts. These fans are designed to operate continuously unless shut down by the RMSS. Separate interlocks are provided so the dampers do not close on loss of the main exhaust fans except for an RMSS shutdown.

9.4.1.2 System Evaluation. During normal operation, the system is designed to move air from clean areas to potentially contaminated areas and, ultimately, to the atmosphere. Thus, the operating areas of the reactor building remain habitable during normal operations. During an RMS-1 trip, the reactor operating areas are sealed as part of the confinement and are unventilated. Thus, the reactor operating areas (including the control room) may become contaminated during an RMS-1 trip.

9.4.2 Canal Area Ventilation System

The canal is located outside confinement. The canal and general storage and laydown areas are supplied with ventilation from system HVS-3. A schematic diagram of the HVS-3 system is shown in Figure 9.4-3.

9.4.2.1 System Description. The HVS-3 system supplies air to the storage canal and the general storage and laydown areas, and includes an electric preheater, supply fan HVS-3, cleanable-type filters, a hot water coil, and outside air dampers. This equipment is enclosed in a built-up unit located on the equipment platform at the east end of the storage canal area. The air supplied to the general storage area is exhausted through a roof ventilator.

The HVS-3 system operation is controlled by conditions within the space served; the system will be stopped on indication of locally high airborne contamination. Either of the two continuous air monitors (CAMs) located in the area can actuate the shutdown of HVS-3 (the action is referred to as RMS-4). The action will also stop the two roof exhaust fans if they are operating in the automatic mode.

9.4.2.2 System Evaluation. During normal operations, the canal area ventilation system provides adequate airflow to maintain habitability for operating personnel. The installed radiation detectors provide adequate local and remote warnings of radiation releases within the canal area. The RMS-4 action does not seal the area since it is not a confinement. However, stopping the fans will limit the effect of the heating and ventilating system on radioactive releases.

9.4.3 Utility Area Ventilation System

The air supplied to the utility area is supplied by HVS-5. The flow is from clean areas to potentially more contaminated areas, if more than one area is supplied by the same outlet. Exhaust fans are provided to ensure air removal and direction of airflow.

9.4.3.1 System Description. These systems provide ventilation to the utility area and adjacent spaces on the first floor, the switchgear and primary pump motor areas in the first basement, and the HDW equipment areas in the second basement.

The HVS-5 equipment is located in the southeast corner of the diesel generator room and consists of a filtering system, heating coils, air washer, and supply fan HVS-5. Sufficient supply air is provided to remove heat rejected by the diesel generators in the utility area on the first floor and heat generated by the switchgear in the first basement. This system also provides part of the air required to cool the primary coolant pump motor area. During a RMS-1 trip, HVS-5 system is shut off and service areas are unventilated.

The supply HVS-5 system serves the utility area, which is outside confinement and the basement areas which are within confinement. To provide confinement, the supply and return air duct work connecting this system to the basement areas and the battery room exhaust duct are provided with butterfly-dampers and backup dampers. These dampers are closed by the RMSS.

9.4.3.2 System Evaluation. During normal operation, the HVS-5 ventilation system provides adequate control of airborne contamination. Potential airborne contamination is swept by the airflow from clean areas to potentially contaminated areas and then to the exhaust stack.

FOIA Exemption 3 UCNI, Exemption 7f (Pages 9-50 – HVAC drawing)

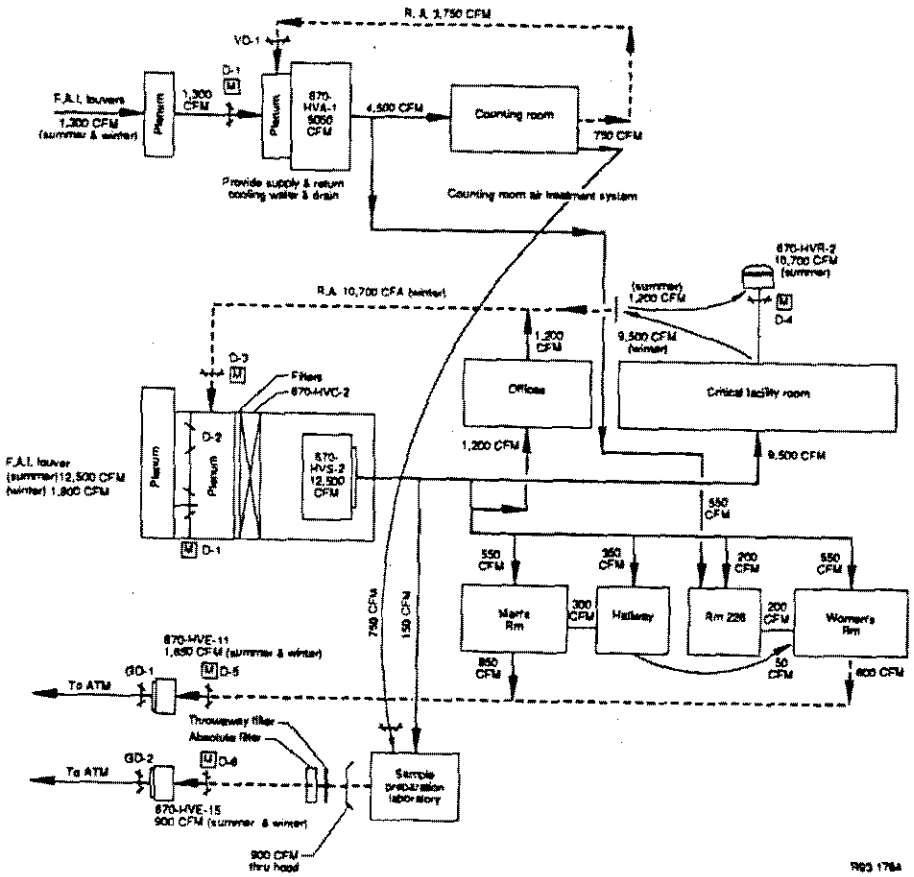

Figure 9.4-2. Critical Facility Area Heating and Ventilating System (HVS-2 System). **(For Information Only)**

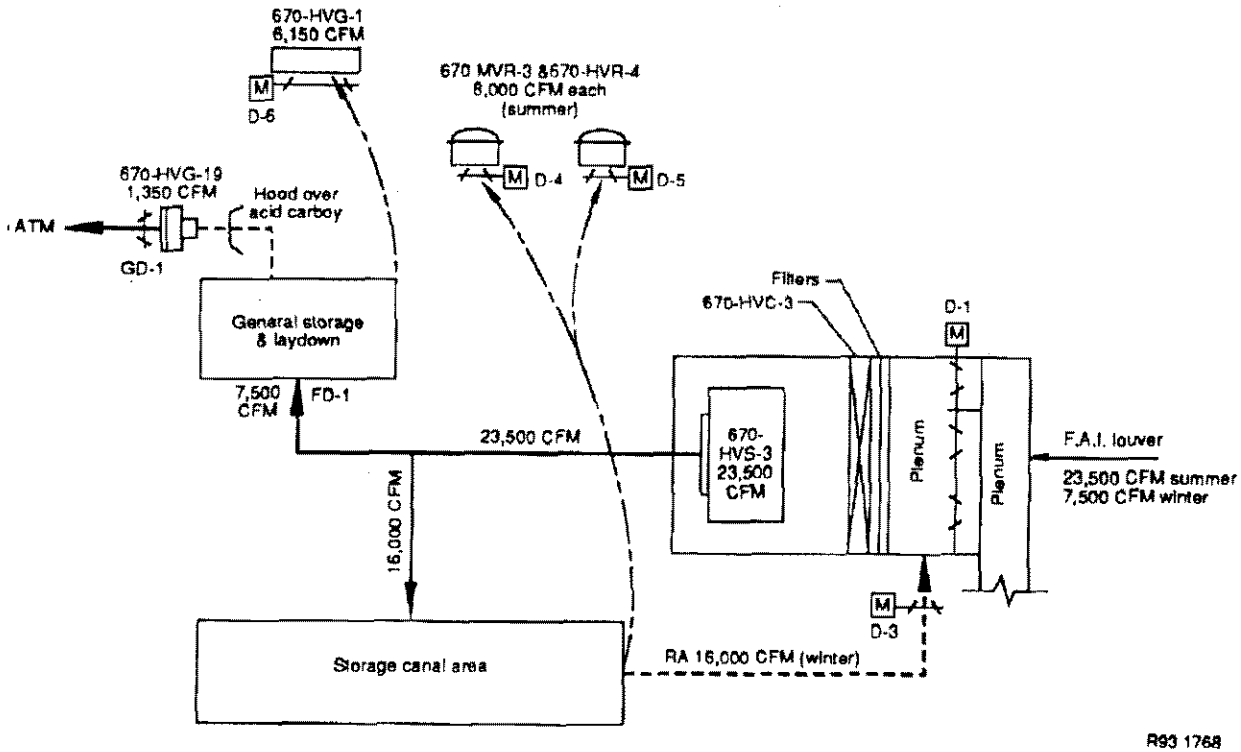

Figure 9.4-3. Storage Canal Area Heating and Ventilating System (HVS-3 System). **(For Information Only)**

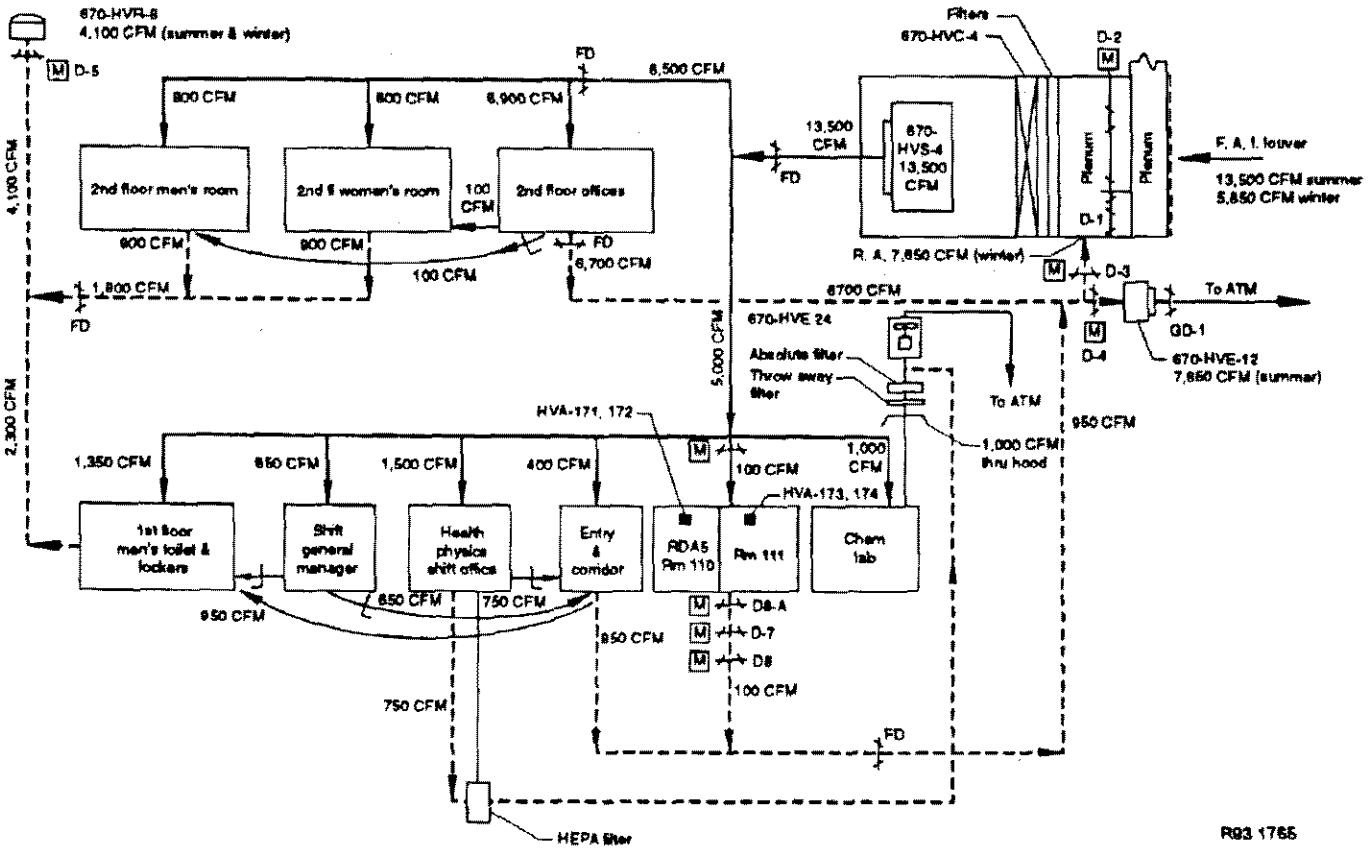

Figure 9.4-4. Office Area Heating and Ventilating System (HVS-4 System). **(For Information Only)**

9.5 Other Auxiliary Systems

9.5.1 Fire Protection Design Requirements

9.5.1.1 Fire Hazard Analysis. The ATR Fire Hazard Analysis (FHA), HAD-116 (INEEL 2001a) and HAD-114 (INEEL 2001b) was completed by an outside contractor under the supervision of the area Fire Protection Engineer for TRA and by the Site Fire Marshal. The purpose of the FHAs was to assess the current configuration and use of the ATR Building TRA-670 and ATR Support Buildings for resistance to a damaging fire.

The analysis was performed in accordance with the DOE guidance contained in the Implementation Guide for use with DOE Order 420.1 (DOE 1996) and DOE Order 440.1A (DOE 1998).

The FHA utilized criteria from DOE standards and guidance documents, national codes and standards (*e.g.*, National Fire Protection Association (NFPA), Factory Mutual (FM) Data Sheets, *etc.*), and consensus building codes to assess the facilities. Site visits were conducted to gather information. Facility site surveys and interviews with building and fire protection personnel were conducted, as well as review of site and building drawings, safety documentation, and fire department procedures.

The codes of record for each building were taken to be the codes in effect during the design and construction of the buildings, in accordance with the direction contained in DOE Order 420.1. The ATR building was constructed in the early 1960's and began operation in 1967. The UFSAR indicates that the building was constructed using the 1961 Uniform Building Code (UBC 1961). Fire protection systems have been installed at various times in the history of the building, and the codes of record are those in effect at the time of installation. Upgrades and fire system installations were assumed in the analysis to have met the Orders, codes, and standards at the time of construction.

Although specific non-compliance issues to some NFPA fire codes have been identified by previous code analysis and as listed in the FHA, the FHA did not include a line-by-line compliance review of all NFPA codes.

The most recent versions of applicable codes and standards were used for this analysis, as appropriate. In some cases, items that do not comply with the current code may have complied with the codes in existence at the time of construction. Noncompliance issues with the codes of record and with the current versions of the codes were evaluated in these FHAs. Recommended corrective actions were provided where necessary.

With the noted exceptions documented in the FHA for ATR, the fire protection design features in accordance with DOE 420.1 for the ATR Building are adequate based on anticipated fire hazards. The ATR FHA included recommendations to address issues where the level of protection could be improved with modifications. In addition to the building fire safety features, the INEEL Fire Department provides emergency response capabilities for the hazards present. The fire scenarios that rely on fire department response for nuclear safety and additional design recommendations are identified in Thatcher (2000b).

9.5.1.2 Design Basis. The ATR fire protection design was based upon the latest commercial industrial practices in effect at the time of construction. In the early years of nuclear reactor development, commercial power plant practices were followed. The design requirements are found in the construction specification and plans that were accepted by the U.S. Government during construction (Ebasco 1965b).

In the history of the ATR, a variety of DOE and contractor fire protection professionals have applied the quantification of the improved risk fire protection standards to the changes that have been made to the ATR.

The applied standards have become more encompassing as the years have passed. The original improved risk fire protection criteria only addressed the protection of property. It was later enhanced to include spread of radioactive contamination to offsite locations. It now includes life safety, the Occupational Safety and Health Act (OSHA), and hazardous materials (DOE 2002).

9.5.1.2.1 Design Requirements—The design philosophy has changed and the design requirements have evolved since the original design and construction. Because of these differences, this SAR documents the design basis developed and accepted over the operating history of the ATR by the contractor and the DOE. This design basis reflects the currently accepted level of fire protection.

> Following are the 10 design requirements as listed in DOE Order 420.1 (DOE 1996) and ATR current status of compliance as summarized from review of the FHA (HAD-116) to those listed requirements. In addition to the design requirements and the current ATR status, numerous recommendations were made in the HAD-116 report. These recommendations were entered into a tracking system. As these issues are resolved the UFSAR will be updated as necessary. The HAD-116 report, in combination with Table 15.16-1, provides assurances that the ATR can be operated within the safety basis until all recommendations are resolved.

1. A reliable water supply of adequate capacity for fire suppression.

Summary of the FHA (HAD-116):

- The adequacy and reliability of the TRA water supply system is acceptable as documented in annual TRA Pump and Loop tests.
- The existing fire water supply system for ATR facility consists of a looped network of buried 10-, 12-, and 14-in. diameter ductile iron fire mains. The lead-ins to the buildings are typically six in. in diameter. The firewater service mains are fed by four diesel and one electric driven fire pumps taking suction from four ground level raw water storage tanks. Because the approved fire pumps are adequate for the required fire protection demands, the water supply is considered adequate for fire protection.
- A second water supply is also available from an elevated storage tank.
- Ground level storage tanks (TRA-719) are filled by deep well pumps, which automatically maintain the water level. Each of the firewater pumps and the elevated tank individually provide an adequate water supply for fire protection. For all fires except a cooling tower fire, the elevated tank volume is only marginally below the quantity required for the full duration of a fire (90 minutes supply). The demand of 1,500 gpm specified in Section 5.2.1 of the FHA is conservative for all areas of the ATR except for a fire in the cooling tower that requires a flow of 2,472 gpm. The full volume is unlikely to be used for a fire in the ATR TRA-670.
- The ground level storage tanks (TRA-719) are designed and valved to enable each tank to feed TRA-633 and TRA-619 firewater pumps. The location of the valves in the system provides reliability and redundancy by enabling isolation of a system breech while maintaining operation of at least one tank and one fire pump. All tanks in operation are interconnected and drain together.

- TRA has dedicated firewater pumphouse (TRA-688) and firewater storage tank (TRA-781) to provide a redundant firewater supply. The pumphouse includes two additional diesel firewater pumps that are about one-half the capacity of the other firewater pumps.

- The ATR Building has an Emergency Firewater Injection System (EFIS). The EFIS was designed to provide emergency core cooling for some Design Basis accidents. When activated, the EFIS is supplied from the TRA firewater distribution system. Therefore, the EFIS activation can potentially reduce the water available to the fire protection systems. The EFIS has never been used to mitigate a transient in ATR. Therefore, the potential for a reduction in available fire protection water due to EFIS activation is low and is acceptable. The hydraulic demand created by the simultaneous operation of the EFIS and cooling tower deluge systems can be met by the TRA water supply, depending on the number of operating firewater pumps.

2. Noncombustible or fire-resistive construction, where appropriate. Complete fire-rated barriers that are commensurate with the fire hazard to isolate hazardous occupancies and to minimize fire spread and loss potential consistent with defined limits as established by DOE.

Summary of the FHA (HAD-116):

- All construction materials are noncombustible or fire resistive in accordance with DOE Orders 420.1A (DOE 2002) and ATR Facility Specific General Design Criteria in Chapter 3 (Design of Structures, Components, Equipment, and Systems). The construction and occupancy types of the ATR Building are classified in accordance with the Uniform Building Code (IBC 2000), NFPA 220, and NFPA 101. Building TRA-670 is categorized as follows:

- UBC construction type: II-N

- UBC Occupancy Classification: Group F, Division 2

- NFPA 220 construction type: II (000)

- NFPA 101 Occupancy Classification: Special Purpose Industrial

- In accordance with the FHA that assumed worst-case conditions, an ignition source was assumed for all fire scenarios. A qualitative assessment was performed to determine the impact of a fire in the facilities given the observed fire hazards. The effects of the fire protection systems on a fire were also analyzed. Conclusions from this analysis were used to provide appropriate recommendations for reducing the fire hazard.

- The fire hazard analysis also considered the effects of external fire exposures and natural hazards. External exposure fires include commodities stored outside of the building or in a nearby building. In addition to the impact of fires and natural hazards on the building, the potential and severity of a toxic, biologic, and/or radiological event was evaluated. The impact of security on fire safety was also evaluated.

- Following the release of the FHA an engineering analysis of the fire barriers for ATR was performed. The engineering analysis (Hunter 2001) provides the documentation for the evaluation, assignment, and designation of firewalls along with fire resistance ratings for interior walls located within Building TRA-670. The recommendations as listed in the FHA and the results of the engineering analysis of ATR fire barriers are pending further analysis to determine if additional corrections to the barriers are warranted.

3. Automatic fire extinguishing systems are required throughout all significant facilities and in all areas subject to loss of safety class systems, significant life safety hazards, unacceptable program interruption, or fire loss potential in excess of defined limits.

   Summary of the FHA (HAD-116):

- Installed sprinkler systems are intended to meet the criteria outlined in NFPA 13, Standard for the Installation of Sprinkler Systems.
- TRA-670 contains various fire suppression systems. Automatic fire suppression in the building is accomplished by wet pipe sprinkler systems, pre-action systems and Halon systems. Manual fire fighting means include portable fire extinguishers, inside hose stations, fire hydrants and fire department connections. The FHA (HAD-116) provides a description and analysis of each of the automatic fire suppression system provided for ATR. With the exceptions noted in the FHA, automatic fire sprinkler systems in the ATR are adequately designed and installed and are appropriate for the hazards protected.
- The location of safety equipment in the ATR building is summarized in Thatcher (2000a). Historically, ATR has never had fire protection systems in inaccessible areas containing the reactor vessel or primary coolant system because of maintenance difficulties and concerns about inadvertent actuation. ATR experiment and primary coolant system piping exposure to inadvertent firewater actuation could create costly piping contamination issues. Sprinkler systems have been disabled for experiment loop cubicles. The heat exchanger area, nozzle trench, and other areas around and below the reactor vessel are normally inaccessible areas during reactor operations and the combustible loading administrative requirements restrict combustible material loading. Surveillance of the combustible loading is performed prior to reactor startup (Thatcher 2000a).
- The operability of fire protection systems that are relied upon for nuclear safety is closely controlled in Abnormal Operating Procedures. Those fire protection systems important for the protection of safety related equipment are identified in Thatcher (2000b) and Atkinson (1999).
- Areas of the building with fire protection systems that would not mitigate building structural damage from a large fire such as in the canal area and reactor main floor have special restrictions in place to reduce the risk of a vehicle fire and standoff areas restricting transient combustible loading to reduce the risk of building structural damage.

4. Redundant fire protection systems in areas where safety class systems are vulnerable to fire damage and where no redundant safety capability exists outside of the fire area. In new facilities, redundant safety class systems shall be in separate fire areas. Redundant fire protection systems shall also be provided in areas where the maximum possible fire loss (MPFL) exceeds limits established by DOE.

   Summary of the FHA (HAD-116):

- The FHA provides an analysis of the 12 "Safety Related Systems" at ATR (Section 6 of the FHA). The "safety related" designation is similar to the "safety class" designation defined for non-reactor DOE facilities. The FHA provided recommendations for improvement of redundant level of fire protection as well as for improving protection of Safety Related Systems.

5. A means to summon the fire department in the event of a fire, such as a fire alarm signaling system.

   Summary of the FHA (HAD-116):

- All fire and EMS related communications are received by the INEEL Fire Alarm Center. This includes automatic fire alarms and telephone reports for fire and EMS emergencies. The communications alarm room is manned around the clock. Alarm room operators are part of the Alarm and Communications organization and are not members of the INEEL Fire Department.

6. A means to notify and evacuate building occupants in the event of a fire, such as a fire detection or fire alarm system and illuminated protected egress paths.

   Summary of the FHA (HAD-116):

- The automatic fire alarm system for the ATR Building consists of one intelligent, addressable fire alarm control panel (FACP) that is connected to the TRA Notifier Net system, which alarms to the INEEL Alarm Center and notifies the fire department. The FACP also alarms locally, via the Automated Voice Announcement System (AVAS).

- Detection device spacing and location appears to be in compliance with NFPA 72, National Fire Alarm Code. Occupant notification is accomplished with fire alarm speakers and combination speaker/strobe units that are located throughout the building. Speaker and speaker/strobe placement appears to be sufficient to notify occupants in case of fire.

- Fire alarm device spacing and location appears to comply with NFPA 72, National Fire Alarm Code and is expected to perform adequately during a fire.

- The normal illumination levels throughout ATR are adequate for egress. Battery-backed emergency lighting is provided to illuminate egress routes in the event that normal lighting fails. Illumination exit signs are ported at all exits. The exit signs are provided with normal power and battery backup. With the exceptions noted in the FHA (HAD-116), the illumination for egress is adequate.

7. Physical access and appropriate equipment to facilitate effective intervention by the fire department, such as an interior standpipe system(s) in multi-story or large facilities with complex configurations.

   Summary of the FHA (HAD-116):

- With the noted exceptions documented in this FHA, the fire protection features for the ATR Building are adequate based on anticipated fire hazards. In addition to the building fire safety features, the INEEL Fire Department provides emergency response capabilities for the hazards present. The fire scenarios that rely on fire department response for nuclear safety are identified in Thatcher (2000b). The Fire Department prepares facility Fire Department Pre-Plans that provide firefighters with information such as building configuration, hazards, firefighting tactics and limitations, utilities, and fire systems.

- Fire department vehicle access is provided via paved roads. The TRA site is secured and requires coordination of the fire department and security to obtain access.

- Adequate open street frontage is provided around the perimeter of the ATR Building to allow emergency response. The fire department has access to fire hydrants and can enter the buildings through several exterior doorways. No upgrades are required regarding vehicle or personnel access to the ATR Building.

8. A means to prevent the accidental release of significant quantities of contaminated products of combustion and fire fighting water to the environment, such as ventilation control and filter systems and curbs and dikes. Such features would only be necessary if required by the FHA or Safety Analysis Report (SAR) in conjunction with other facility or site environmental protection measures.

   Summary of the FHA (HAD-116):

- Potential for Toxic, Biologic, or Radiation Events are addressed in the FHA. Two potentials for release are analyzed; PCB release from the components associated with the diesel generators and exposure from unirradiated fuel elements.

- Several fire scenarios described in the FHA are capable of causing a release of contamination or fission products. These include fires in the Switchgear Room, the Pump Motor Corridor, and the Heat Exchanger Room. These fire scenarios can lead to a loss of primary coolant forced flow or a loss of primary coolant boundary integrity. In either case, fission product release or contamination release to the building exterior will be slowed by the building confinement system.

- Several fire scenarios are capable of interrupting operations for twelve months or more. The majority of this down time would be due to difficulty in obtaining replacement components, especially the diesel generators, the reactor vessel, and the switchgear.

- Water from fire suppression activities could either drain outside the building or drain into the sanitary drainage systems. Some of the fire suppression runoff that drains outside the building could contain contaminated water. With no dike system in place around the building, the runoff would not necessarily be contained. The recommended limitations to the fuel loading as described in the FHA would reduce the amount of water necessary to extinguish fires, especially in the areas where there may be contamination. This would limit the amount of the potential for contamination and the amount of contaminated water runoff.

9. Fire and related hazards that are unique to DOE and are not addressed by industry codes and standards shall be protected by isolation, segregation or use of special fire control systems, such as inert gas or explosion suppression, as determined by the FHA.

   Summary of the FHA (HAD-116):

- Fire and related hazards that are unique and not addressed by typical industrial standards are summarized throughout the Fire Hazard Analysis and a summary of items that would provide an increased level of protection are provided in the FHA.

10. Fire protection systems shall be designed such that their inadvertent operation, inactivation or failure of structural stability will not result in the loss of vital safety functions or inoperability of safety class systems as determined by the SAR.

Summary of the FHA (HAD-116):

- A spurious trip of an automatic sprinkler system within the building is possible, but would be infrequent. However, should a sprinkler fail resulting in water discharge, it would likely cause limited physical damage or interruption of operations; except if occurring in area of computer equipment or exposed thermally hot piping, then a significant interruption to operations is possible. Actuation of an automatic sprinkler system during a fire would likely cause less damage than an unmitigated fire.
- Accidental discharge of the Halon 1301 systems would not likely damage the building or significantly delay any vital programs. Furthermore, an accidental discharge of Halon from any system component will result in concentrations of less than 10%. This concentration in any area of the building is considered non-life threatening.
- Upon activation the installed fire suppression system does not create an unacceptable increase in potential damage or loss to the building.

9.5.1.2.2 Original Construction Design Requirements—The original design basis for fire protection of the ATR is the construction technical specification P-53 (Ebasco 1965b). This specification is designated NFPA 13, 1961 Edition, as the Code of Reference.

The water based fire sprinkler systems for TRA-670 consist of wet pipe systems and preaction systems, installed to the Code of Record at the time of installation, which included provisions for earthquake bracing. Water storage for the facility is considered adequate for 90 minutes of required supply at the maximum expected flow rate. The fire protection systems installed in the PPS rooms are designed to limit the probable fire loss in the PPS rooms so potential fire damage is limited to one system of reactor safety features. This is accomplished by providing redundantly installed fire suppression systems (Halon 1301 and preaction fire sprinklers), smoke/heat detection, and by providing facility fire separation areas with rated fire barriers.

The sprinkler system for the cooling tower is an open head deluge, hydraulically designed to provide 0.50 gpm/ft^2 over the entire system under the fan deck and around the velocity cone and fan motor, with a maximum of two cells per system. Activation of each deluge system is controlled by temperature sensitive thermistor wire. Water storage for a minimum of 90 minutes is required for the TRA fire protection water supply.

Sprinkler system waterflow and control valve supervisory tamper switches are connected to the building fire alarm system.

9.5.1.3 Systems Description

9.5.1.3.1 Heating, Ventilating, and Air Conditioning System—Five separate fan systems provide ventilation for the ATR. Section 9.4 of this SAR describes these systems.

9.5.1.3.2 Structural Fire Resistance—The structural support system for the first basement is bare steel beams and columns. The ceiling is reinforced concrete. The second basement is constructed using reinforced concrete floors, walls, and ceiling. The office areas, including control room, are constructed using reinforced concrete floors on steel, masonry, and gypsum walls for interior fire separations, and exterior insulated metal panel walls. The reactor building, ATRC, canal, and diesel electric generator portions of the building are structural steel with insulated metal exterior walls and interior masonry fire separations.

The ATR building (TRA-670) is divided into the fire areas as shown on Figures 9.5-1 through 9.5-8. Fire separation between the various areas can be provided by fire rated walls and other barriers. In some cases, the wall or other barrier providing separation is not fire rated. Small openings or voids can be detected in most of the firewalls separating the fire areas. An example of this is the north wall of the canal in the location where the basement exit stairway reaches the main floor. In these cases, administrative controls such as limiting combustibles are used to ensure fire separation between different fire areas.

9.5.1.3.2.1 Horizontal Fire Separations—Horizontal fire separations were identified in Hunter (2001). On the main floor, shown in Figure 9.5-1, the wall between the reactor main floor and the canal is noncombustible and is not fire rated. The wall between the reactor floor and the control room and office area and the storage canal area is two-hour fire rated with fire-rated windows installed on the first and second floors. The door between the reactor main floor and the airlock provides a smoke barrier.

In the first basement, a horizontal separation runs east-west through the building along the north wall of the storage canal (shown in Figures 9.5-2, G-F, 1-9). This wall is a 3-hour fire rated assembly.

A second horizontal separation runs north-south between the electrical switch room and the primary coolant pump room (Figure 9.5-2, F-K, 4-5). This wall is a 3-hour fire rated assembly.

A horizontal separation runs north-south between the Primary Coolant Heat Exchanger area and from the High Pressure Demineralized Water Equipment Area. This wall is a 3-hour fire rated assembly.

9.5.1.3.2.2 Vertical Fire Separations—The floors separating each of the levels of the building, with the exception of the mezzanine areas of the ATRC, are necessary fire barriers since the existing interior fire rated walls do not line up to form a common barrier through all levels. The FHA specifies that each level be assigned at least a 2-hour fire resistance. Since all levels are poured-in-place concrete with a thickness ranging between 8 in. and 6 ft, the 2-hour resistance can be met. Hunter (2001) assigns each of the building's floors with a 3-hour fire rating.

9.5.1.3.3 Transformer Protection—The ATR feeder transformers are separated by two-hour fire-rated partitions. There is no fire sprinkler protection for the transformers.

9.5.1.3.4 Electrical Switchgear Room—The main electrical switch gear room is located in the first basement. Electrical wiring enters into this common room and is then distributed out through the southeast cable tray entry and through the wall into the primary coolant pump motor area. The diesel generator feeder circuits go up through the ceiling into the diesel generator room upstairs and outside to ATR Building TRA-674. None of these electrical cables are separated by fire resistive separations. The cable trays containing this power cabling are stacked on top of one another with 9 to 12 in. vertical separation. The cable trays are 3 in. deep and 18 in. wide. The metal trays are slotted bottom, solid side, open top, galvanized metal.

9.5.1.3.4.1 Grouped Electrical Cables—The metal tray system (power distribution and instrumentation) travels along the main access aisle of the reactor in both the first and second basements. In the first basement, between column lines E and D and 2 and 3, the power cable trays join with the instrumentation cable trays coming from the reactor control room, which is located above this area. The cable trays for the electrical and electronic instrumentation are distributed in the same cable tray array (separate power and instrument trays) throughout the first and second basements.

9.5.1.3.4.2 Cable Tray Separation in Diesel Generator Room—Along the north side of the building, underground cable conduits enter the building and pass through the diesel generator pit on the way to the electrical switch gear in the first basement. These underground conduits include the fire alarm circuits, the security alarm circuits, the power circuits going to the cooling tower, the generator power circuits from TRA-674, and commercial power circuits. These cable trays are exposed by the two diesel generators located in the room.

9.5.1.3.5 Oil Lubrication System for Primary Coolant Pumps—Each of the primary coolant pumps is equipped with its own 17-gal oil reservoir, piping, and heat exchanger.

9.5.1.3.6 TRA-671—Cooling Tower Pumphouse—The building contains the deluge fire sprinkler risers for the cooling tower. Water supply for these systems is supplied by a single 12-in. connection to the TRA water supply. The building is protected by a wet-pipe, ordinary-hazard, sprinkler system. The sprinkler system is monitored by the INEEL fire alarm system.

9.5.1.3.7 TRA-771—Cooling Tower—The ATR Cooling Tower is a four cell, induced draft, counter flow, fiberglass cooling tower that is located north of the reactor building. This cooling tower is protected by automatic, deluge fire sprinklers underneath the fan deck, and over each fan motor. Fire sprinkler system design releases 0.50 gpm/ft^2 over the entire cooling tower.

Operation of the deluge fire sprinkler system is supervised by TRA-671 fire alarm control panels (FACPs) and INEEL fire alarm system. This supervision covers thermistor wire failure, control panel failure, waterflow, and control valve tamper switches.

9.5.1.3.8 ATR Buildings TRA-619 and TRA-633 Fire Pumphouses—TRA-619 is the raw water pumphouse. This building houses electrical switch gear for raw water pumps, one diesel engine-driven fire pump, one electric motor-driven fire pump, two cooling tower makeup pumps, and four raw feedwater pumps.

The building is protected by a wet-pipe, ordinary hazard occupancy, pipe schedule system. The building also houses a notifier FACP for the INEEL fire alarm system. The fire sprinkler system is monitored by the INEEL fire alarm system.

Building TRA-633 houses one diesel engine-driven fire pump. A 660-gal diesel fuel storage tank located within this building supplies fuel for the fire pump engine.

The building is protected by a wet-pipe automatic sprinkler system designed for ordinary hazard occupancy, pipe schedule systems. The fire sprinkler system is monitored by the INEEL fire alarm system.

9.5.1.3.9 TRA-688-Firewater Pumphouse-This building houses two diesel engine-driven firewater pumps to provide redundant fire suppression capabilities. Each diesel engine is supplied by a dedicated 572 gallon diesel fuel storage tank located inside the building. The pumps take a suction from a dedicated 1,000,000-gallon firewater storage tank (TRA-781), connected to the north side of the building, and discharge to the ATR underground firewater loop.

The facility is protected by a automatic wet pipe system. Fire protection for this facility is deemed adequate, since the system was installed in accordance with NFPA 13.

9.5.1.3.10 TRA-623—Electrical Substation Building—This building houses electrical switchgear, breakers, and equipment for the TRA area.

The cable trench under the building is protected by a fire detection system for early warning and reporting of fire related conditions. The system is supervised by the INEEL fire alarm system.

9.5.1.3.11 TRA-674—Diesel/Electric Generator Building—The building is protected by a dry-pipe, automatic-fire sprinkler system. The riser for the system is located inside the north wall of the TRA-670 diesel generator room. The system is designed for ordinary hazard occupancy, pipe schedule basis. The system is a subsystem of System 7, which protects part of TRA-670.

9.5.1.3.12 Fire Protection Program—The ATR has a comprehensive fire protection program. Chapter 13 (Management, Organization, and Institutional Safety Provisions) of this SAR discusses the program.

9.5.1.3.13 Fire Hazard Analysis—A qualified fire protection engineer is required to perform a fire hazards analysis. The fire hazards analysis is described in *ATR fire hazard analysis* (INEEL 2001a).

9.5.1.3.14 Fire Protection Water Supply—The primary fire protection water system for the TRA is a looped, underground piping system made up of 8-, 10-, 12-, and 14-in. diameter mains. This system receives water through three 375,000-gal, grade-level, steel, pump suction tanks, which draw water from three deep well, vertical turbine pumps. A 150-ft high, (as measured to the bottom of the curve portion of the tank) 150,000-gal gravity tank provides a secondary source for the system. A redundant firewater source is provided by the 1,000,000-gallon, grade-level firewater storage tank. See Figure 9.2-2 for a simplified diagram of the ATR Firewater System.

Water is pumped into the underground mains by five automatic, centrifugal firewater pumps: (a) an electric motor-driven fire pump (619-12), (b) #2 diesel engine-driven fire pump (619-10), and (c) #1 diesel engine-driven fire pump (633-1), (d) 688-M-1 diesel engine driven fire pump, and (e) 688-M-2 diesel engine driven fire pump. Each of the firewater pumps are rated between 2,500 to 5,100 gpm at normal system pressures. Normal operating pressure on the system is maintained by the 150-ft high gravity tank (75 to 85 psi).

The water level in the water storage tanks is normally controlled from 22 to 27 ft. This level provides a nominal total storage capacity of up to 1 million gal in the three (TRA-719) water storage tanks.

A limited secondary source of water (domestic and fire protection) is available from the 150,000-gal gravity tank (150 ft high).

The 1,000,000-gallon firewater storage tank (TRA-781) and pumphouse provide a redundant firewater supply. This tank and pumphouse have not been incorporated into the safety-related emergency firewater injection system (EFIS).

All of the underground supply piping, except for that around the ATR, was installed in 1978-79, which is Class 51, ductile iron pipe. The original ATR piping, which is cast-iron pipe, remains as it was originally installed. Many of the original control valves installed were curb box-operated gate valves with key-valve operators.

9.5.1.3.14.1 Sectional Isolation Valves—Sectional control valves are strategically located at exterior piping intersections. These valves are mostly the post indicator valve assembly and post indicator valve types. Most valves are equipped with electronic tamper switches, which are supervised by the INEEL fire alarm system. Critical ATR valves are further padlocked in their normal open position.

9.5.1.3.14.2 Hydrant Isolation Valves—Each fire hydrant is equipped with a hydrant isolation valve.

9.5.1.3.15 Manual Fire Suppression—A full-time, paid, fire department is operated by the Contractor at the INEEL. This fire department staffs stations located at the Central Facilities Area (CFA), Test Area North (TAN), and Argonne National Laboratory-West (ANL-W). The first responding engine company to TRA comes from CFA. The normal response time is between 6 and 10 minutes. If needed, the officer in charge manually initiates backup response. The INEEL Fire Department is trained to handle radiological and fire incidents commensurate with the hazards at the TRA area.

9.5.1.3.15.1 Incident Response Team (IRT)—The TRA has an IRT that is under the direction of the ATR shift supervisor or assistant. IRT leaders respond to all emergencies. The fire suppression activities are limited to incipient-stage fire activities and are designed to provide full support for the INEEL Fire Department upon its arrival. The IRT is regularly trained in all operations.

Portable fire extinguishers are located throughout TRA. The type, location, and size of extinguishers are in accordance with NFPA 10 requirements.

9.5.1.3.15.2 Standpipe Systems—All inside Class II, 1-1/2-in. standpipe and associated hoses are maintained in accordance with Contractor procedures. All outside hoses are also maintained in accordance with Contractor procedures.

TRA-670 has Class II standpipe hose connections in all areas of the building. These standpipe hose connections are each equipped with 50 ft of lined fire hose and adjustable spray nozzles, which are Underwriters Laboratories (UL) listed for ordinary and electrical fires. The hose racks are supplied from one 8-in. pipe connection into the building from the outside water main system. The outside post indicator valve is supervised by the INEEL fire alarm system.

The standpipe system is seismically qualified (Snow and Hendrickson 1996).

9.5.1.3.16 Automatic Fire Alarm and Detection System—The automatic fire alarm system for the ATR reactor building is made up of three intelligent, addressable FACPs, connected to the TRA Notifier Network, which alarms to the INEEL Fire Alarm Center. These FACPs report alarms locally, via the Automated Voice Announcement System (AVAS) and at the Fire Alarm Center.. Personnel from the Life Safety System Unit maintain the ATR fire alarm and detection system.

The FACPs are local and proprietary intelligent, addressable fire alarm panels. All fire alarms for this building are transmitted directly to the TRA fire alarm communication network, which reports the alarm on Intelligent Network Annunciators (INAs). The INAs then send the alarm via modems in TRA-614 and TRA-670 to the CFA Fire Alarm Center. At the same time this alarm is sent to the AVAS computer located in TRA-680 and to a printer that is located in TRA-658. The FACPs provide local building audible/visual alarming for the building. The AVAS system provides audible notification for the rest of TRA, and responds the IRT.

Within the ATR reactor building, all fire alarm circuits are hard wire, shielded pair supervised circuits. The ATR fire alarm circuit wiring is broken down into Signaling Line Circuits (SLC), which cover the TRA-670, TRA-674, TRA-676, and TRA-689. The fire alarm installation covers sprinkler system (wet and pre-action) water flow, the manual fire alarms, halon system activation, smoke detection, and heat detection.

The sprinkler systems within the ATR are also provided with "zone" flow switches to enhance emergency response. A main sprinkler system waterflow switch is installed for each of the fourteen sprinkler system risers in the building.

Portions of the ATR reactor building are also provided with fire detection devices (smoke and heat) that are associated with releasing functions (halon and pre-action systems). Automatic detection is provided in the diesel generator area (heat detectors), Lay Down Area (heat detectors), Primary Pump Motor corridor (Analaser smoke detection system and heat detectors), switchgear room (Analaser smoke detection system), PPS (heat and smoke detectors), RDAS (heat and smoke detectors), LDAS (smoke detectors), LCA (smoke detectors), and in the ATR Control Room (smoke and heat detectors).

Special extinguishing system control panels have been installed for the reactor control room (pre-action sprinkler system and halon extinguishing systems) and the ATR PPS rooms (pre-action system and halon extinguishing systems). These panels are intelligent, addressable panels and communicate via the TRA Fire Alarm network.

Each of the FACPs equipped with a releasing function for the halon or preaction systems has a backup battery power supply, designed for a minimum of 24 hours on standby. Circuits for detection devices for halon discharge are cross-zoned to actuate on any two smoke detectors. An audible alarm is provided on the first alarm, with discharge occurring 30 seconds after the second alarm activates. The halon discharge can be interrupted during the 30-second countdown by pressing a manual inhibit button. Additionally, there are manual pull stations that can discharge the halon systems.

The INEEL fire alarm system consists of a multiplex alarming system, which is supervised by Alarm Operators 24 hours a day. The TRA is on a separate multiplex communication system, which report all events to redundant computers.

The fire alarm system supervises the communications components, the fire alarm panels, and the INAs. The FACPs supervise the fire sprinkler waterflow devices, halon tank pressures, SLC integrity, valve tamper switches, manual fire alarm stations, impairments of systems, fire pump status, fire detection devices and, various other functions.

Within the TRA, there are 30 building fire alarm control panels that control and supervise the building fire protection systems. These panels also provide building specific annunciation upon the activation of a fire/smoke alarm. There are 4 INA associated with the TRA fire alarm network. These INAs are responsible for sending the fire alarm to the CFA Alarm Room, printing the event in TRA-658, and providing the event to the AVAS computer that is located in TRA-680.

9.5.1.3.17 Automatic Sprinkler Protection—Wet-pipe automatic sprinkler protection was originally installed at TRA-670 by Grinnell Fire Protection Systems in 1964. The automatic sprinkler protection for this building is designed and updated in accordance with NFPA 13. The most recent updates occurred in 1996. The architect/engineer delineated the areas of the building in which automatic sprinkler protection was installed.

9.5.1.3.18 Halon 1301 Fire Extinguishing Systems—Halon 1301 fire extinguishing systems are located in several areas of the ATR. These areas are the reactor control room, complex instrumentation room, computer support rooms on the main floor, the ATR PPS rooms and the SATS room in the first basement.

The Halon system for the ATR PPS/SATS rooms uses separate containers of Halon 1301 for each room. The five rooms use a single Halon control panel. The preaction fire sprinkler system uses this Halon control panel to receive the signals from the heat detectors and to operate the system by tripping the solenoid valve and filling the water piping of the preaction automatic sprinkler system.

The TRA-670 Control Room, PPS Rooms, Data Acquisition, and SATS room Halon 1301 Extinguishing Systems are essentially the same. These systems are activated by cross-zoned fire detectors (ionization and photoelectric). Activation of the first detector closes doors, shuts dampers, shuts down ventilation, and sounds a local alarm. It also transmits an alarm to the FACP for transmission to the INEEL fire alarm system. Upon activation of the second detector, the Halon is discharged after a 30-second time delay. Each room is equipped with a manual discharge station and a system inhibit switch. Operation of the manual activation station will discharge Halon even if the inhibit switch is engaged. The Halon control panel also activates the preaction fire sprinkler systems after receiving an alarm from the heat detectors.

9.5.1.4 Safety Evaluation. See Section 15.16.1.

9.5.1.5 Testing and Inspection. The testing and inspection requirements for the various fire protection systems are contained within their respective NFPA standards. These requirements have been translated into procedures that are completed on a scheduled basis. TRA Fire Protection Engineer, TRA Maintenance Operations (TRAMO) and ATR Operations oversee the testing and inspection procedures.

Life Safety Systems of the INEEL has developed and regularly completes procedures in fire alarm and detection systems and fixed fire protection systems (water, Halon 1301, standpipe, fire hydrants, extinguisher servicing, etc.).

Overview inspections are conducted by DOE-ID, other INEEL organizations, contracted outside inspection organizations, and TRA fire protection professionals. The inspection organization writes a report on each inspection; management provides appropriate action to resolve each identified deficiency.

9.5.1.6 Instrumentation Requirements. Each fire protection system is required to have local instrumentation and remote supervision instrumentation to ensure that the systems are operational.

9.5.2 ATR Communication Systems

The ATR communications systems provide diverse and redundant means for communication within the ATR building, throughout the TRA complex, and off-site as necessary to conduct normal operations and to provide necessary response during off-normal or emergency situations. It is anticipated that most, if not all, of these systems (radios and dedicated phone lines in the ECC, TRA-680) would be available during emergencies. However, only the emergency TRA evacuation alarm system is credited as being available for the accident analysis of Chapter 15. The evacuation system is discussed in conjunction with the evaluation of failures in supporting systems and the analysis of beyond design basis accident sequences in Chapter 15 (Accident Analyses).

9.5.3 ATR Normal and Emergency Lighting Systems

9.5.3.1 ATR Normal Lighting System—The design basis for the normal ATR lighting system is to provide a minimum illumination of 10 ft-candles at floor level in all non-work areas, a minimum illumination of 30 ft-candles at floor level for all work areas, and a minimum of 50 ft-candles at the work level for all work stations.

Original design basis is described in Ebasco Design Data Sheet No. E-18 - Outline of Lighting Design (Ebasco 1961). New fixture and modification follow the National Electric Code and ATR facility-specific General Design Criteria in Chapter 3 (Design of Structures, Components, Equipment, and Systems).

In this design, two sources of power are provided. The first is energized from various commercial distribution panels. The second is energized from various diesel-commercial distribution panels.

Upon loss of the normal operating diesel source, the diesel-commercial side of the panel is automatically transferred to the commercial source until the diesel power source is restored.

In the event of a commercial power outage, the portion of the lighting system on the diesel-commercial bus continues to operate until commercial power is restored.

Thus, it requires the loss of both sources of power to curtail the entire normal ATR lighting system. Loss of either normal power source will result in the illumination of the emergency lighting system as discussed in Section 9.5.3.2.

9.5.3.2 ATR Emergency Lighting Systems. The following subsections discuss the design basis, description, safety evaluations, and testing and inspection requirements for the ATR emergency lighting system.

9.5.3.2.1 System Design Basis—The current design basis for the ATR emergency lighting system is to provide a reliable source of lighting at an average floor level illumination of 1 ft-candle (minimum of .1 ft-candle) to permit an orderly and expeditious evacuation of personnel from the ATR reactor building and outlying support building floors in the event of the loss of both commercial and diesel-commercial power to the normal ATR lighting system.

The design basis for the ATR emergency lighting system is to provide illumination of building exits, manual fire alarms, and emergency showers throughout the ATR building during routine operations and in the event of loss of normal power sources.

The original design basis is described in Ebasco Design Data Sheet No. E-18-Outline of Lighting Design (Ebasco 1961). Modifications follow the National Electric Code NFPA 101, Sections 5.8 and 5.9, and ATR facility-specific General Design Criteria in Chapter 3 (Design of Structures, Components, Equipment, and Systems).

9.5.3.2.2 System Descriptions—Emergency lighting is provided throughout the ATR reactor building including over building or area exits, over manual fire alarms, and over emergency showers.

The emergency lights are dc powered and function only upon loss of both diesel and diesel-commercial power sources. These lights provide 90 minutes of low-level illumination for personnel egress from the building.

Each emergency lighting unit consists of two lamps and a rechargeable, sealed battery pack. The lamps are energized from the battery. An undervoltage relay automatically switches the lamps on when the normal ac power source fails, and it turns the lights off when the normal ac source is restored. The batteries are automatically recharged by a built-in charger when the normal power source is restored.

The emergency lights over the exits, fire alarms, and emergency showers are normally illuminated by power supplied from the commercial and diesel-commercial power sources. These lighting loads are picked up automatically by the independent battery pack power system upon loss of both commercial and diesel-commercial power sources and provide illumination for up to 90 minutes with the batteries at full charge, and 10 to 15 minutes of illumination when the batteries are at the end of their design life.

9.5.3.2.3 System Evaluation—The current ATR emergency lighting systems have been demonstrated by past experience as adequate for personnel evacuation.

9.5.3.2.4 Testing and Inspection Requirements—The ATR emergency lighting systems are subjected to routine preventative maintenance inspections and testing as part of the TRA maintenance program.

9.5.4 Experiment Storage

9.5.4.1 TRA-634 Experiment Storage. TRA-634 is normally used for interim storage of radioactive materials that result from maintenance activities. The radiological control program provides the necessary requirements to handle these materials. On occasion, TRA-634 is used for interim storage of experiments that are being transported either to the ATR or to another facility. TRA-634, other than during the time this facility is being used to store experiments is not within the scope of this UFSAR. The following sections describe and evaluate the interim storage of experiments within TRA-634. It should be noted that this section compares any postulated accident consequences with the evaluation guidelines

presented in DOE ID 420.D (DOE-ID 2000). This comparison is used versus that presented in Chapter 15 because TRA-634 does not directly support operation of the ATR and therefore has different evacuation procedures. The sections below describe interim storage in TRA-634 as it relates to the other various analyses presented in this UFSAR. Other analyses are included as relevant to the discussions in order to determine the hazard category of TRA-634 during experiment storage and whether additional controls are required during that time frame.

9.5.4.1.1 Evaluation Guidelines—Evaluation guidelines (EGs) are outlined in DOE-ID (2000). EGs are used to determine the need for safety equipment and controls for test train storage in TRA-634. The EGs were chosen versus the ATR plant protection criteria because within TRA-670 an evacuation is required following certain plant conditions. Since TRA-634 is not connected and is separate from these evacuation conditions, using the EGs is consistent with other TRA buildings that do not directly support TRA-670 operations (e.g., MTR, NMIS).

9.5.4.1.2 Description—Test trains are transported in the NR-3 and, NR-4 casks to TRA and then into TRA-670 for loading into the ATR. These casks might need to be stored for a short time prior to installation of the stored experiment into the ATR or its transport to another facility. If this need arises, either the NR-3 or the NR-4 cask can be stored in TRA-634. The ATR-1 cask is not transported outside of the ATR building.

Loading and unloading test trains from the ATR into transport casks is described elsewhere in this UFSAR. Once the transport casks are loaded with irradiated test trains, they are either shipped to the receiving facility or are temporarily stored in TRA-634. Irradiated test trains will contain various levels of radionuclides including actinides if the test train contained fissile material. This additional inventory of radioactive material requires comparison with the inventory thresholds given in DOE-STD-1027-92 (DOE 1997) to determine the level of safety documentation required.

Knudson (2002) has evaluated a test train that was irradiated in the ATR at 200 kW test power for 60 days. This evaluation concluded that a test train could contain an inventory that meets the Hazard Category 2 thresholds. Therefore, safety basis meeting the requirements of 10 CFR 830, Subpart B is required. However, for this case, the only time that this inventory of material will be located within TRA-634 is when either test train transport cask is being temporarily stored in TRA-634. Thus, this analysis only applies during the time either the loaded NR-3 or the NR-4 casks are stored in TRA-634. Note that the ATR-1 cask is not approved for storage in TRA-634 and will not be discussed further in the sections below.

9.5.4.1.3 Experiment Storage Evaluation—This UFSAR presents several accident scenarios that are applicable to the storage of test train casks within TRA-634. These scenarios are addressed below and show that the evaluations presented in Chapter 15 bound any potential consequences that might result from the storage of the test train storage casks in TRA-634.

9.5.4.1.3.1 Fire—A fire in TRA-634 is considered an anticipated (Condition 2) event. Test trains are loaded into the casks only following a certain decay time, which is controlled while the test train is in TRA-670. This ensures that a loss of water from within the casks will not cause the test train to melt, thus there is no release of fission products. In order for a release to occur, a fire would have to heat the cask(s) to a point where cooling water is lost. Without cooling water the test train could melt. Test trains are stored in TRA-634 less than 10% of the time in any given year and the majority of the test trains do not contain fissile material. Thus, the majority of the test trains (non-fueled) will have much lower dose consequences because of the smaller inventory of material available for release.

Most fueled test trains are operated as less than 200 kW fission power and average about 100 kW. Dose consequences are also less if fission power is less. Test trains that are stored in TRA-634 have greater than 16 hours of decay time due to the time involved in the removal of the test train from the ATR. Only those test trains removed from the ATR as soon as an outage cycle begins would approach a short decay time of 16 hours. The frequency of fire (0.05/yr) in conjunction with the storage of a test train in TRA-634 (10%) and that the test train contains fissile material only 50% of the time, results in a frequency of 2.5E-3/yr (0.05/yr*0.1*0.5). This represents the frequency (unlikely) at which a fire of sufficient magnitude to cause a release is expected to occur at TRA-634.

Knudson (2002) has evaluated a radiological release from NR cask(s) temporarily stored in TRA-634. The fire is assumed to cause the test train inside the cask to melt 16 hours following shutdown of the ATR. The analysis is based on a total test fission power of 200 kW with 60 days of irradiation. The test fission power for any test train is limited to 200 kW by analysis presented elsewhere in this UFSAR. Total irradiation time is typically interrupted by reactor outages and other delays periods during test examinations. These additional decay times make the above fission power and irradiation time conservative with respect to estimating dose consequences.

Release fractions, release time, personnel distances, and plume passage times are documented in Knudson (2002). A TRA worker located 100 m from the release during the passage of the entire plume would receive a TEDE of 18.1 rem and a member of the maximally exposed public would receive a TEDE of 0.26 rem.

9.5.4.1.3.1.1 Comparison to Evaluation Guidelines—Comparison of the exposures presented above to the INEEL EGs indicates that all consequences are within their applicable guidelines. Therefore, no TSR level controls or safety equipment are needed to mitigate or prevent a fire during storage of test train casks in TRA-634. This only means that no specific controls derived from the fire analysis are necessary. Institutional safety programs (e.g., radiological control program) are in place to ensure that protection is provided for the worker, the public, and the environment. In addition, maintaining an operable fire suppression system should also be ensured during the time the casks are stored in TRA-634.

9.5.4.1.3.2 Loss of Shielding—A potential loss of shielding might occur during handling inside of the ATR facility. The frequency of a loss of shielding event is reduced once the cask is loaded on the trailer. Loss of shielding during transport within TRA is considered an extremely unlikely (Condition 4) event. With the cask loaded on the trailer, the concern is for an external event that could lead to ejecting the test train from the cask. For storage in TRA-634, the external events of concern would be a fire or seismic event that leads to the collapse of the building. The building is constructed with heavy structural steel with a sheet metal covering. Similar to the other buildings of this type at TRA, it would have been designed and constructed to UBC requirements in effect at the time of construction. The likelihood of a seismic event leading to a building collapse is significantly lower than the likelihood of a fire.

An unmitigated fire is not expected to lead to a loss of shielding or removal of a test train from its cask for the following reasons. The roof on TRA-634 is sheet metal with some insulation and is light in weight compared to the cask and the cask mast. The fire suppression and HVAC equipment are likewise light compared to the cask and the cask mast. The building structural steel beams run parallel to the long axis of the cask are not directly over the cask and are the only heavy items that are located above the cask and trailer.

A loss of shielding would require pulling the highly irradiated portion of the test train out the top of the cask body. This is not very likely given the geometry of the cask and trailer. In addition, the highly irradiated portion of the test train is generally 5 to 8 ft below the top of the body of the cask depending on the test train. Radiation levels decrease exponentially above the in-core portion of the test train since the irradiation fluxes decrease exponentially above the top of the active core.

The mast portion above the cask body does not provide nor does it need to provide shielding and is much less robust than the cask body. However, the mast is much more robust than the top portion of a test train it contains. If a load was sufficient in size to break the mast it would also break the top of the test train and the highly irradiated portion will still remain within the cask body.

The worst case is assumed to be when the mast breaks and the test train is pulled up within the cask until the mast strikes the trailer. This is not considered likely because the clearance between the mast and the trailer is less than 3 ft. In this case, the highly irradiated portion of the test train would still be within the cask body.

Based on the above discussions, a loss of shielding during storage of test trains in TRA-634 is an extremely unlikely (Condition 4) event. Resulting consequences are bounded by those presented in Marts (1998). That analysis determined the expected consequences for a test train that has been ejected from its transport cask. The current case is well bounded because the test train will remain within the transport cask. However, radiation will stream out the area left open from breaking the cask mast. This beam is also directed upward which will reduce the potential dose to workers on the ground. Skyshine would increase, but it would not be in large amounts and would not increase enough that the consequences due to an ejected test train would not remain bounding.

9.5.4.1.3.2.1 Comparison to Evaluation Guidelines—Comparison of the exposures presented above to the INEEL EGs indicates that all consequences are within their applicable guidelines. Therefore, no TSR level controls or safety equipment are needed to mitigate or prevent a fire during storage of test train casks in TRA-634. This only means that no specific controls derived from the fire analysis are necessary. Institutional safety programs (e.g., radiological control program) are in place to ensure that protection is provided for the worker, the public, and environment. In addition, maintaining an operable fire suppression system should be ensured during the time the casks are stored in TRA-634.

9.5.4.1.4 Requirements—The above evaluations show that no additional TSR level controls or equipment are required to ensure that consequences caused by various events are within INEEL EGs. However, the above evaluations do rely on other controls such as minimum decay times. These decay times are derived elsewhere in this UFSAR and not further described here except to note that storage of loaded experiment casks within TRA-634 relies on adherence to those limits.

CHAPTER 9 – AUXILIARY SYSTEMS - UPGRADED FINAL SAFETY ANALYSIS REPORT FOR THE ADVANCED TEST REACTOR	**Identifier:** SAR-153 **Revision:** 11 **Page:** 9-72 of 9-90 **Effective Date:** 08/10/04

CHAPTER 9 – AUXILIARY SYSTEMS - UPGRADED FINAL SAFETY ANALYSIS REPORT FOR THE ADVANCED TEST REACTOR	**Identifier:** SAR-153 **Revision:** 11 **Page:** 9-73 of 9-90 **Effective Date:** 08/10/04

CHAPTER 9 – AUXILIARY SYSTEMS - UPGRADED FINAL SAFETY ANALYSIS REPORT FOR THE ADVANCED TEST REACTOR	**Identifier:** SAR-153 **Revision:** 11 **Page:** 9-74 of 9-90 **Effective Date:** 08/10/04

CHAPTER 9 – AUXILIARY SYSTEMS - UPGRADED FINAL SAFETY ANALYSIS REPORT FOR THE ADVANCED TEST REACTOR	**Identifier:** SAR-153 **Revision:** 11 **Page:** 9-75 of 9-90 **Effective Date:** 08/10/04

CHAPTER 9 – AUXILIARY SYSTEMS - UPGRADED FINAL SAFETY ANALYSIS REPORT FOR THE ADVANCED TEST REACTOR	**Identifier:** SAR-153 **Revision:** 11 **Page:** 9-76 of 9-90 **Effective Date:** 08/10/04

CHAPTER 9 – AUXILIARY SYSTEMS - UPGRADED FINAL SAFETY ANALYSIS REPORT FOR THE ADVANCED TEST REACTOR	**Identifier:** SAR-153 **Revision:** 11 **Page:** 9-77 of 9-90 **Effective Date:** 08/10/04

FOIA Exemption 3 UCNI, Exemption 7f (Pages 9-72 – 9-79 – Reactor building fire area drawings)

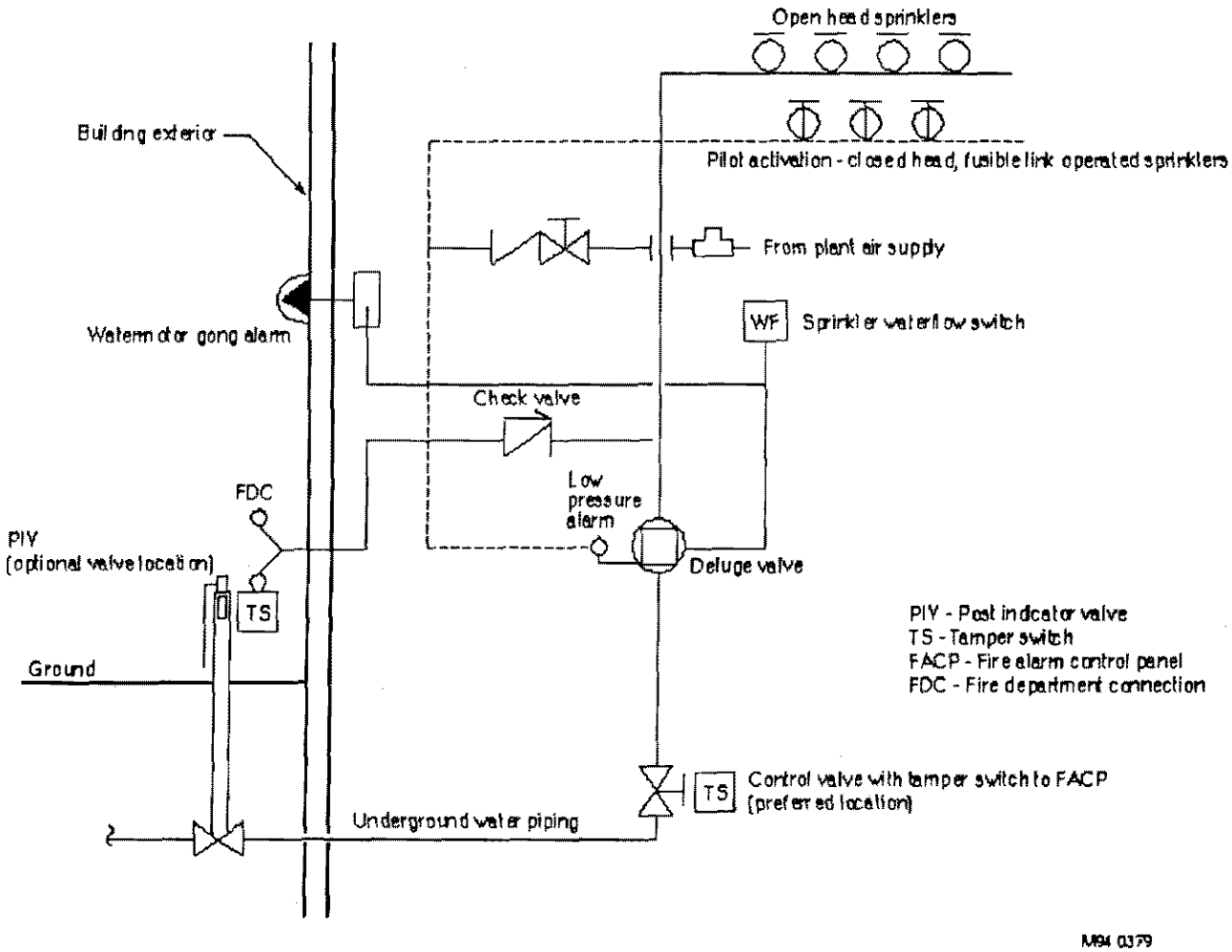

Figure 9.5-9. Typical Deluge Fire Sprinkler System Schematic. **(For Information Only)**

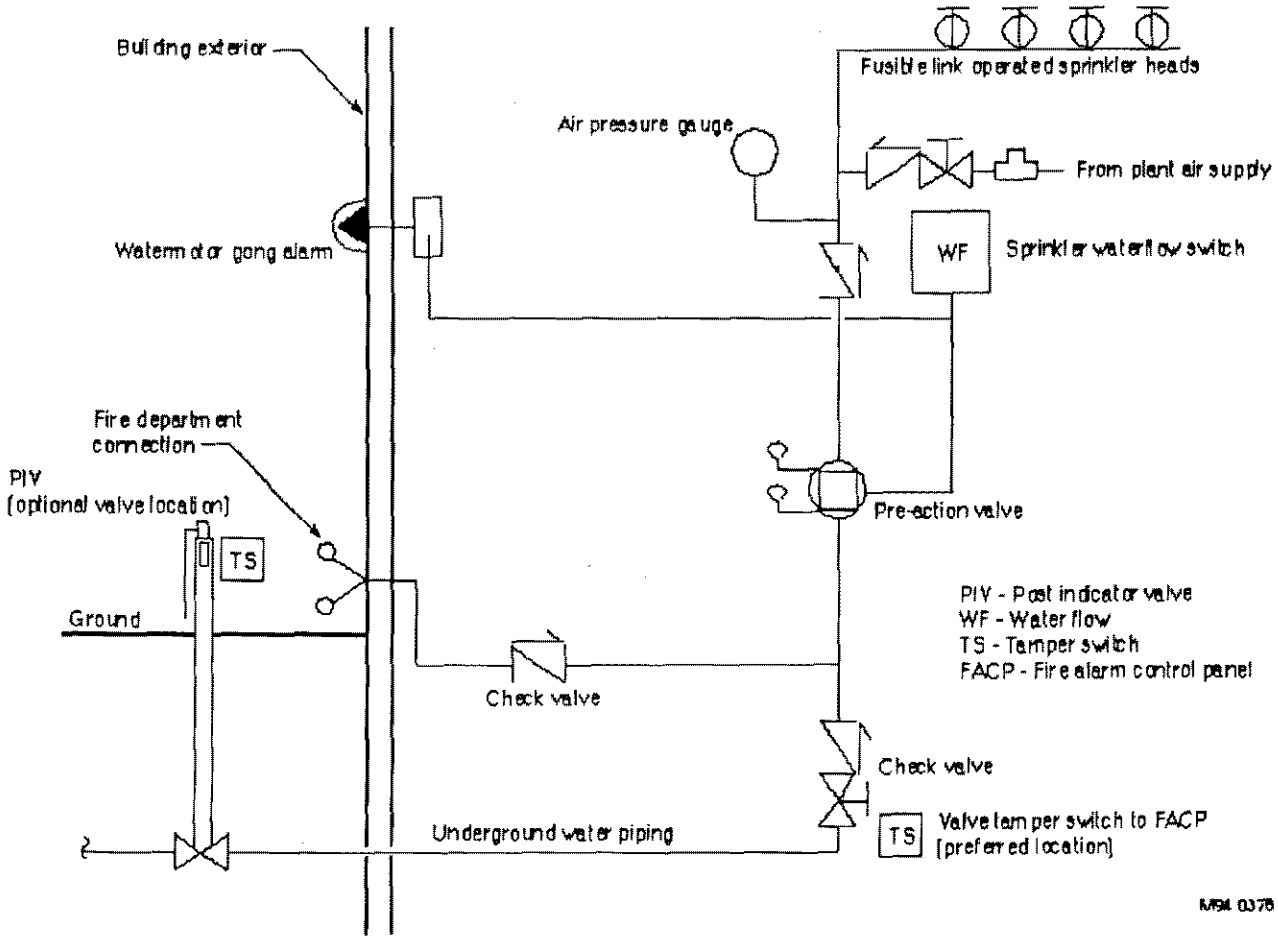

Figure 9.5-10. Typical Preaction Fire Sprinkler System Schematic. **(For Information Only)**

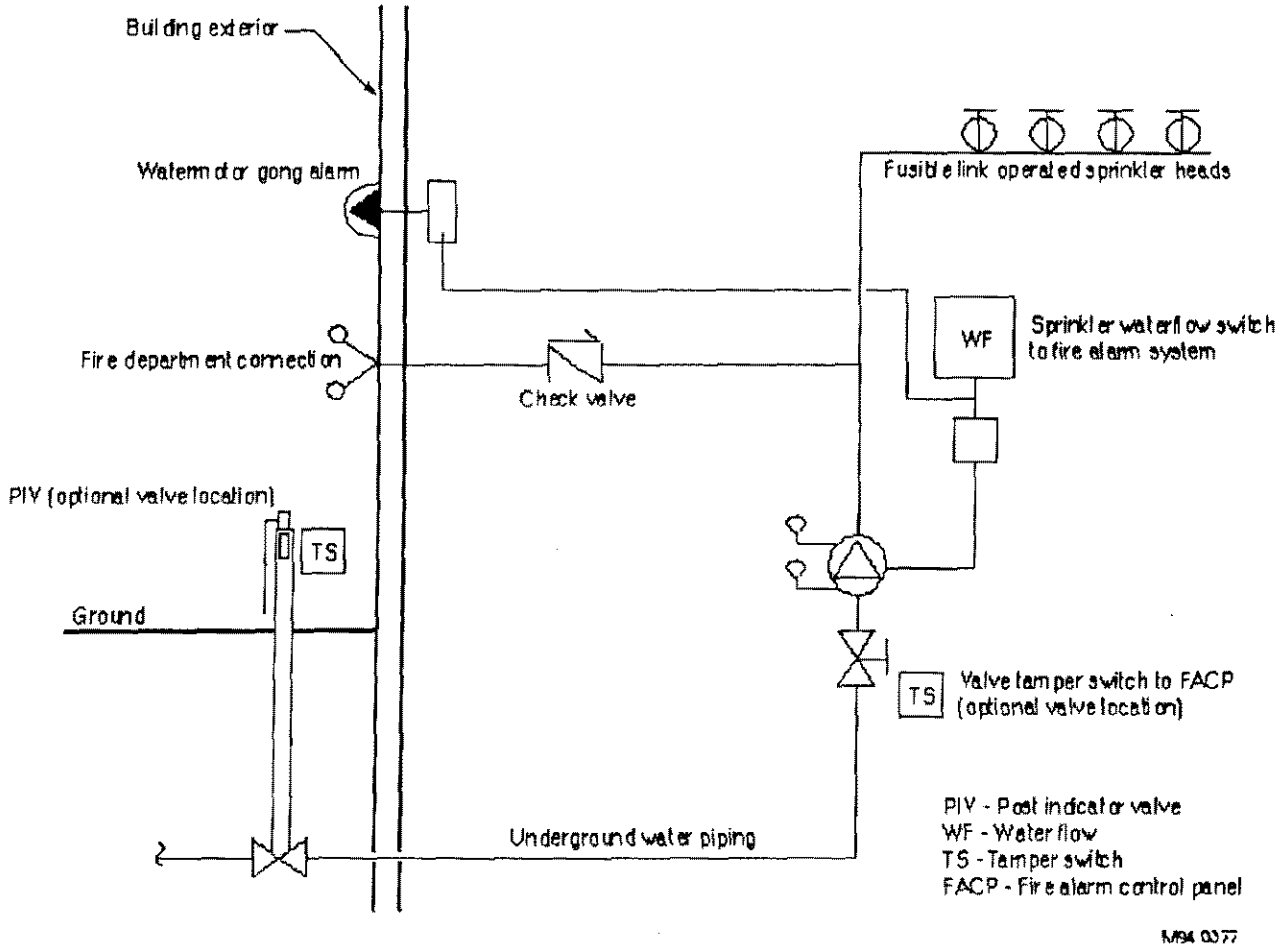

Figure 9.5-11. Typical Wet-Pipe Fire Sprinkler System Schematic. **(For Information Only)**

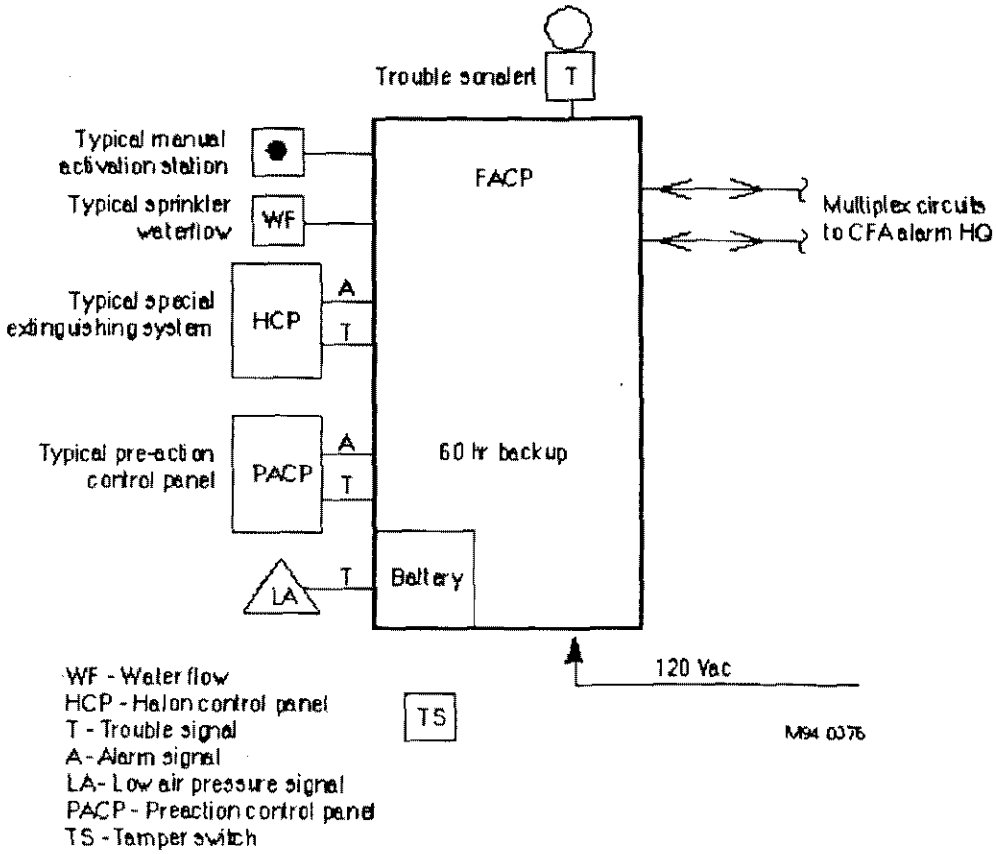

Figure 9.5-12. Typical Fire Alarm Panel Schematic. **(For Information Only)**

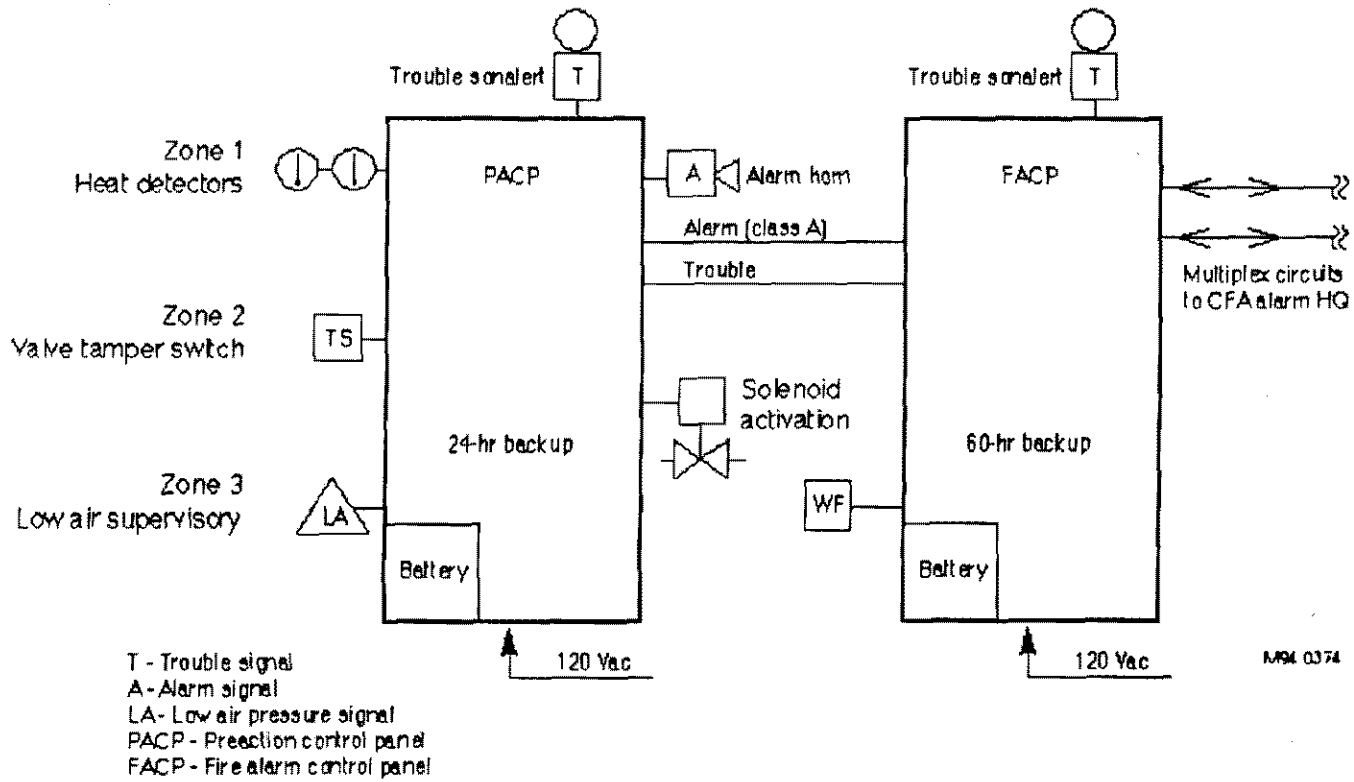

Figure 9.5-13. Typical Preaction Control Schematic. **(For Information Only)**

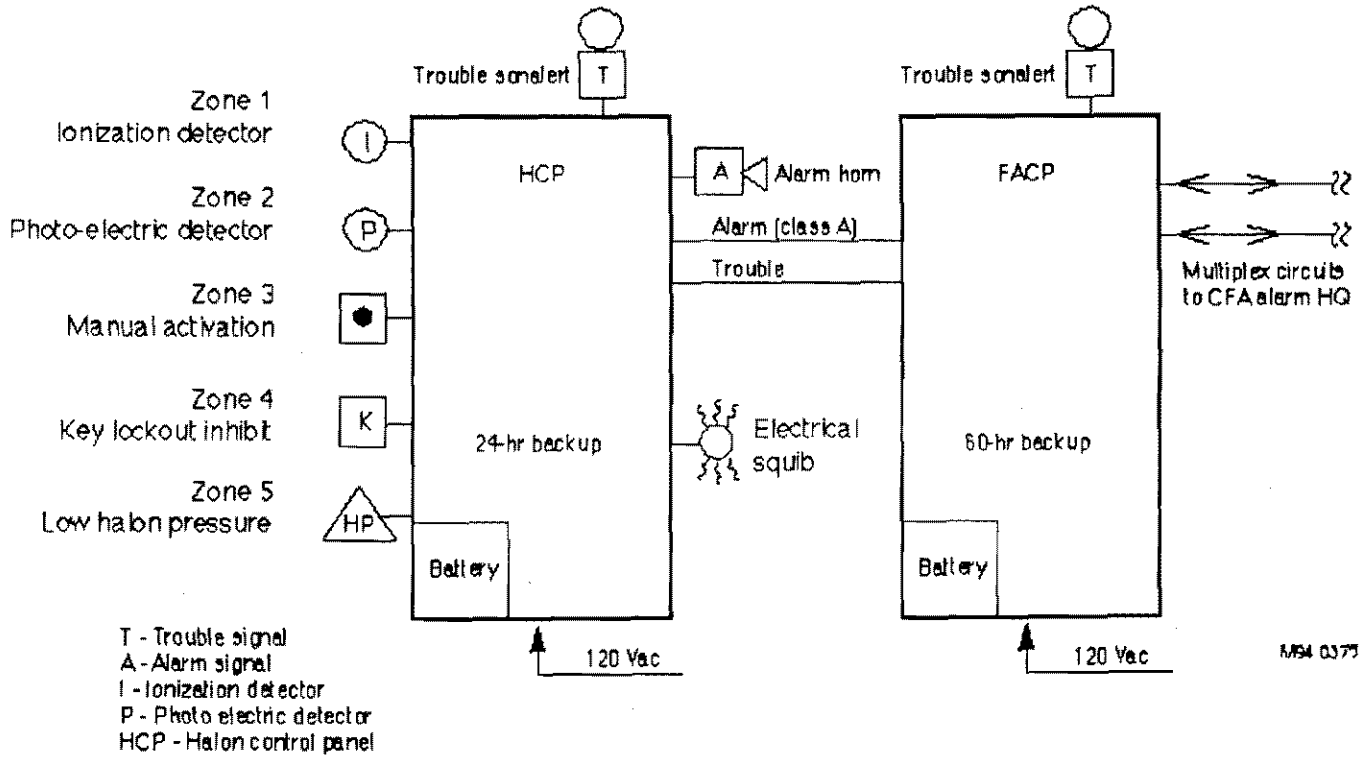

Figure 9.5-14. Typical Halon 1301 Special Extinguishing System Schematic. **(For Information Only)**

9.6 References

Abrashoff, J. D., 1979, *Criticality Safety Evaluation for ATR Experiment Holder*, SD-C-79-002, EG&G Idaho, Inc., June 1979.

Abrashoff, J. D., 1980, *Criticality Safety Evaluation for Beryllium Storage and Handling in the ATR Canal*, SD-78-014, Revision 1, EG&G Idaho, Inc., February 1980.

Anderson, E. C., 1991, Letter to W. W. Gay III, ECA-103-91, *Review of the Advanced Test Reactor (ATR) Fissile Material Storage Racks*, December 5, 1991.

ASME 1959, *Rules for Construction of Unfired Pressure Vessels, ASME Boiler and Pressure Vessel Code Section VIII*, 1959 Edition, American Society of Mechanical Engineers, New York, NY.

Atkinson, C. A., 1991, *Dose Versus Depth Due to a Postulated Criticality in Water*, EDF PBF/BNCT-185, EG&G Idaho, Inc., June 21, 1991.

Atkinson, S. A., 1994, *ATR Fissile Materials Control Area (FMCA) Criticality Event Tree Analysis*, EDF TRA-ATR-1030, LITCO, November 23, 1994.

Atkinson, S. A., 1999, *Test Reactor Area Firewater System Natural Phenomena Hazards Design Criteria for Firewater Service to the ATR*, EDF TRA-ATR-1368, January 11, 1999.

Bridges, T. L., et al., 2000, *ATR Fresh Fuel Shipping Container Safety Analysis Report for Packaging*, INEL-94/0275, March 28, 2000.

Chapman, J. C., 1996, *Safety Analysis for Soak Test in ETR/ATR Stagnation Column*, EDF TRA-ATR-1047, January 3, 1996.

Close, J. A., 1995, *Hazard Assessment of the ATR Arc Saw*, EDF TRA-ATR-1012, Rev. 2, July 13, 1995.

Companywide Manual, *Engineering and Research*.

Companywide Manual, *INEEL Emergency Plan/RCRA Contingency Plan*, and the TRA Facility Specific Addendum.

DOE, 1996, *Facility Safety*, Order 420.1, U.S. Department of Energy, Washington, D.C., October 24, 1996 (Order canceled).

DOE, 1997, "Hazard Categorization and Safety Analysis Techniques for Compliance with DOE Order 5480. 23, Nuclear Safety Analysis Reports, Change 1, DOE-STD-1027-92, U.S. Department of Energy, Washington D.C., September 1997.

DOE 1998, *Worker Protection Management for DOE Federal and Contractor Employees*, DOE Order 440.1A, U.S. Department of Energy, March 27, 1998

DOE, 2002, *Facility Safety*, Order 420.1A, U.S. Department of Energy, Washington, D.C., May 20, 2002.

DOE-ID, 2000, "Requirements And Guidance For Safety Analysis," Order 420.D, U.S. Department of Energy, Idaho Operations Office, July 17, 2000.

DOE-ID, 2002, "Hoisting and Rigging Program," Order 440.C, Rev. 1, U.S. Department of Energy, Idaho Operations Office, August 1, 2002.

Durney, J. L., 1993, *Criticality Considerations for Fission Rate Monitors for ATRC*, Unreviewed Safety Question Determination, TRA-SE-93-D, March 3, 1993.

Ebasco, 1961, *Design Data Sheet - Outline of Lighting Design*, Design Data Sheet No. E-18, Revision 1, Vol. 19, *ATR Design Manual of Design Data and Studies for Electrical & Instrumentation*, Ebasco Services, Inc., New York, NY, May 26, 1961, p. 38.

Ebasco, 1962a, *ATR Specification for Compressed Air Receiver*, Specification M-28, Revision 1, Ebasco Services, Inc., New York, NY, October 9, 1962.

Ebasco, 1962b, *HP Air System: ATR D-G Starting & Primary & HDW Pressurizing Compressor, ATR Design Manual, Calculations for Miscellaneous Process Systems*, Volume 8, Ebasco Services, Inc., New York, NY, May 31, 1962, pp. 46-52.

Ebasco, 1965a, *ATR Specification for High-Pressure Air Compressors, Receivers, and Accessories*, Specification M-35, Revision 6, Ebasco Services, Inc., New York, NY, October 11, 1965.

Ebasco, 1965b, *Automatic Fire Protection Systems*, Specification P-53, Revision 3, Ebasco Services, Inc., New York, NY, October 15, 1965.

Eide, S. A., S. T. Khericha, and T. A. Thatcher, 1991, *Advanced Test Reactor Probabilistic Risk Assessment*, EGG-PRP-8823, Rev. 1, EG&G Idaho, Inc., September 1991.

Holman, G. W., 1988, Letter to D. R. Mousseau, *Review of the ATR Canal Fuel Storage Racks*, GWH-04-88, February 2, 1988.

House, R. K., 1992, *Bases for Designation of Safety-Related Equipment in the ATR*, PG-T-92-114, EG&G Idaho, Inc., July 1992.

Hunter, L. D., 2001, *ATR-670 Fire Wall Designation*, EDF-TRA-ATR-1596, March 6, 2001.

IBC, 2000, *International Building Code*, International Conference of Building Officials, Whittier, CA, 2000.

INEEL, 2001a, *Combination Fire Hazard Analysis and Fire Safety Assessment ATR Building TRA-670 (HAD-116)*, March 19, 2001

INEEL, 2001b, *Combination Fire Hazard Analysis and Fire Safety Assessment ATR Support Buildings (HAD-114)*, March 19, 2001

INEEL, 2003, *Site Maintenance Management Program (PDD-600)*, Rev. 4, July 28, 2003.

Jones, R. R., 1979, *Criticality Safety Evaluation for the ATR Working Canal Experiment Storage Racks*, RE-P-77-101, EG&G Idaho, Inc., February 1979.

Kim, S. S., 1994, *Criticality Safety Analysis for Water Moderated and Reflected ATR Fuel Element Arrays*, ERA-NRE-94-051, EG&G Idaho, Inc., July 1994.

Knight, D. W., 1991, Letter to W. W. Gay III, DWK-30-91, *Movement of Beryllium in the ATR Canal*, November 21, 1991.

Knight, D. W., 1992, Letter to W. W. Gay III, DWK-03-92, *Storage of Experiments on ATR Canal Hooks*, January 31, 1992.

Knudson, D. L., 2002, *ATR Test Train Cask Radiological Analyses*, EDF TRA-ATR-1832, April 23, 2002.

Marts, G. A., 1998, *Exposures from a Dropped Loop Experiment*, EDF TRA-ATR-1300, Revision 1, March 26, 1998.

Mobley, E. V., 1993, *Criticality Calculations*, EDF TRA-ATR-835, EG&G Idaho, Inc., August 12, 1993.

Mobley, E. V., 1994, *ATR Technical Specifications 3.6 Screening*, EDF TRA-ATR-937, EG&G Idaho, Inc., October 10, 1994.

NFPA, 1961, *Standard for the Installation of Sprinkler Systems*, NFPA 13, National Fire Protection Association, *National Fire Codes*, Quincy, MA. (historical)

NFPA, 1996, *Standard for the Installation of Sprinkler Systems*, NFPA 13, National Fire Protection Association, *National Fire Codes*, Quincy, MA. (historical)

NFPA 10, *Standard for Portable Fire Extinguishers*, National Fire Protection Association, *National Fire Codes*, Quincy, MA.

NFPA 13, *Standard for the Installation of Sprinkler Systems*, National Fire Protection Association, *National Fire Codes*, Quincy, MA.

NFPA 72, *Standard for the Installation, Maintenance, and Use of Protective Signaling Systems*, National Fire Protection Association, *National Fire Codes*, Quincy, MA.

NFPA 101, *Code for Safety to Life from Fire in Buildings and Structures, Life Safety Code*, National Fire Protection Association, *National Fire Codes*, Quincy, MA.

NFPA 220, *Types of Building Construction*, National Fire Protection Association, *National Fire Codes*, Quincy, MA.

O'Brien, C. C., 1991, *Seismic Stress Analysis of the ATR Experiment Racks*, EDF TRA-ATR-591, October 8, 1991.

Snow, S. D. and M. B. Hendickson, 1996, *Analysis of the Complete ATR Firewater Piping System*, PG-T-90-016, Rev. 2, LMITCO, August 1996.

Stuart, C. E., 1998, *Storage of ATR Fuel Elements in ATR Storage Canal at TRA*, INEEL/INT-98-00380, November 1998.

Stuart, C. E., 2001, *Criticality Safety Analysis of ATR Fuel Element Transport Racks at TRA*, INEEL/INT-2000-01525, March 2001.

Stueve, K. A. and L. S. Ghan, 1998, *Firewater and LDW Requirements for the ATR Canal Irradiated Fuel Storage Area*, EDF TRA-ATR-1365, LMITCO, November 28, 1998.

Summers, A. D., 1984, letter to T. K. Campbell, ADS-6-84, *FMCA Criticality Alarm System Analysis*, EG&G Idaho, Inc., April 26, 1984.

Thatcher, T. A., 2000a, *Evaluation of ATR Safety-Related and Risk Significant Equipment Location-Dependent Vulnerability*, EDF TRA-ATR-1564, September 28, 2000.

Thatcher, T. A., 2000b, *Comparison of Postulated Fire Events in the ATR Building*, EDF TRA-ATR-1610, November 16, 2000.

Thatcher, T. A., et al., 1994, *Update to the Advanced Test Reactor Probabilistic Risk Assessment (Levels 1, 2, and 3, Including Shutdown Operations)*, EGG-PRP-11229, EG&G Idaho, Inc., May 1994.

UBC 1961, *Uniform Building Code*, International Conference of Building Officials, Whittier, CA, 1961. (historical)

INTENTIONALLY BLANK

CHAPTER 10

EXPERIMENT AND IRRADIATION FACILITIES

INTENTIONALLY BLANK

CONTENTS

ACRONYMS/ABBREVIATIONS 10-5

10. EXPERIMENTS AND IRRADIATION FACILITIES 10-7

10.1 General Discussion 10-7

10.1.1 Pressurized Water Loop Experiment Facilities 10-8
10.1.2 Capsule Experiment Facilities 10-9
10.1.3 Canal Experiments 10-9
10.1.4 Experiment and Experiment-Related Hardware Handling 10-9
10.1.5 Classification of Experiment Structures, Systems, and Components 10-10
10.1.6 Experiment Safety Analyses 10-11
10.1.7 General Experiment Safety Analysis Criteria 10-12
10.1.8 Experiment Reviews, Verification, and Approvals for All Experiments 10-15

10.2 Pressurized Water Loop Experiment Facilities 10-18

10.2.1 Pressurized Water Loop Inpile Tubes 10-18
10.2.2 Out-of-Pile Loop Facilities 10-26
10.2.3 Auxiliary Support Systems and Utilities 10-32
10.2.4 Loop Operating and Control System 10-39
10.2.5 Specialized Experiment Loop Configurations and Equipment 10-44
10.2.6 Specific PWL Experiment Safety Analyses Criteria 10-46

10.3 Capsule Irradiation Facilities 10-69

10.3.1 Capsule Irradiation Facilities and Experiments Design Functions 10-69
10.3.2 Capsule Irradiation Facilities and Experiment Description 10-69
10.3.3 Capsule Irradiation Facility and Experiment Evaluations 10-70
10.3.4 Capsule Irradiation Facilities and Experiment Testing and Inspection Requirements 10-70
10.3.5 Specific Capsule Irradiation Experiment Safety Analyses Criteria 10-70

10.4 Experiment Handling 10-75

10.4.1 Experiment Handling Equipment Design Function 10-75
10.4.2 Experiment Handling Equipment Description 10-75
10.4.3 Experiment Handling Evaluations 10-76
10.4.4 Experiment Handling Equipment Testing and Inspection Requirements 10-77

10.5 References 10-79

FIGURES

10.1-1. Representative ATR core plan view 10-17

10.2-1. View of typical SIPT elevations 10-51

10.2-2. Representative SIPT sub-pile room piping assembly 10-52

10.2-3. Representative standard IPT flow tube piston ring seal joint 10-53

10.2-4. Typical SIPT closure assembly 10-54

10.2-5. SIPT upper closure assembly/reactor top head seal 10-55

10.2-6. Typical lower envelope tube bellows seal configuration 10-56

10.2-7. Typical IPT reactor bottom head penetration 10-57

10.2-8. Typical SIPT experiment assembly detail 10-58

10.2-9. Typical LIPT assembly 10-59

10.2-10. Representative LIPT upper closure, nozzle flange, and bottom head closure seals 10-60

10.2-11. ATR Loop primary and secondary cubicle arrangement 10-61

10.2-12. Typical ATR Loop primary and secondary cubicles 10-62

10.2-13. Typical Representative ATR Loop facilities flow diagram 10-63

10.2-14. AHTL primary cubicle plan view 10-64

10.2-15. AHTL sub-pile room crossover piping assembly 10-65

10.2-16. Flow diagram of typical helium and moisture detection systems 10-66

10.2-17. PALM drive unit assembly 10-67

10.2-18. Typical MUCH experiment 10-68

10.3-1. ATR irradiation housing assembly 10-73

10.3-2. ATR irradiation housing assembly 10-74

10.4-1. ATR experiment handling general arrangement 10-78

ACRONYMS/ABBREVIATIONS

AHTL	ATR High-Temperature Loop
ANSI	American National Standards Institute
ASME	American Society of Mechanical Engineers
ATR	Advanced Test Reactor
BHS	bulk helium system
C	center
CSAP	core safety assurance package
DCS	distributed control system
DNB	departure from nucleate boiling
E	east
ESA	experiment safety analysis
ESAP	experiment safety assurance package
HDW	high-pressure demineralized water
IPT	inpile tube
ITV	irradiation test vehicle
LDW	low-pressure demineralized water
LMITCO	Lockheed Martin Idaho Technologies Company, Inc.
LIPT	large inpile tube
LOCS	Loop Operating and Control System
MeV	million electron volt
MICE	multiple irradiation capsule experiment
MUCH	maximum useful capacity holder
MW	megawatt
N	north
NE	northeast
NW	northwest
OPL	out-of-pile loop
PALM	powered axial locating mechanism
PCS	primary coolant system
psig	pounds per square inch gauge
PPS	plant protective system
PRA	probabilistic risk assessment
PWL	pressurized water loop
R-T-D	run-to-destruct
RAM	radiation area monitor

S	south
scf	standard cubic feet
SCR	silicon controlled rectifier
SCRAM	safety control rod axe man
SE	southeast
SIPT	standard inpile tube
SOPL	standard out-of-pile loop
SSC	structures, systems, and components
SW	southwest
TRA	Test Reactor Area
TSR	Technical Safety Requirements
UBC	Uniform Building Code
UFSAR	Upgraded Final Safety Analysis Report
W	west

10. EXPERIMENTS AND IRRADIATION FACILITIES

10.1 General Discussion

The Advanced Test Reactor (ATR) was designed for the irradiation of experiments. Many different experiment programs have been and can be conducted at the facility. New experiment programs are actively sought through new business initiatives. The reactor includes an array of core and capsule irradiation tank locations specifically designed to accommodate a variety of experiment assemblies including (a) pressurized water loop (PWL) inpile tube (IPT) experiment assemblies, (b) drop-in capsule irradiation assemblies, and (c) instrumented lead capsule assemblies. Out-of-pile locations are provided inside the reactor vessel, adjacent to the reflector tank in the capsule irradiation tanks. Additionally, experiments can be irradiated outside the reactor vessel using reactor radiation or radiation from materials irradiated in the reactor (e.g., the small gamma facility in the ATR canal).

This chapter describes the experiments and irradiation facilities that are significant to the reactor safety analysis. The reactor safety analysis has considered the potential impacts of the major permanent experiment facilities, programs, and operations and included this consideration in this Upgraded Final Safety Analysis Report (UFSAR). In some cases, these facilities and operations can be initiators of significant reactor facility accidents (e.g., reactivity insertion accidents from the PWL facilities and cask handling accidents). There are also criticality safety implications in the handling of experiments containing fissile material. The analysis of the reactor facility accidents can be found in Chapter 15 (Accident Analyses). Criticality scenarios and resulting controls are discussed in Chapter 9 (Auxiliary Systems). These analyses demonstrate that experiments can be conducted within the approved safety envelope. However, these analyses do not represent a thorough analysis of each experiment. Therefore, each experiment is supported by a detailed experiment safety analysis (ESA). The ESA coupled with the unreviewed safety question process ensure that each experiment is conducted within the approved facility risk envelope. This chapter includes a discussion of the ESA process and criteria that are to be addressed in the ESA.

Irradiation experiments conducted in the reactor vessel are characterized by three basic types. The first type of experiment is positioned in an IPT that isolates the experiment from the reactor coolant and, by means of connected piping and out-of-pile equipment, provides a means for controlling the experiment environment in terms of pressure, temperature, coolant flow, and chemistry. The second type of experiment is a drop-in capsule which is fixed in a core or a capsule irradiation tank position and is cooled by reactor primary coolant. The third type is a lead capsule experiment which is fixed in a core or a capsule irradiation tank position with instrumentation lines that exit the experiment and the reactor vessel and are connected to a control system for monitoring and control of operating parameters.

Figure 10.1-1 provides a representative plan view of the reactor core and the capsule irradiation tanks and identifies the in-vessel experiment locations. The 40-element serpentine core configuration defines positions for nine flux trap locations that are identified by their orientation to the north-south axis of the reactor core. Corresponding penetrations in the top and bottom head of the reactor vessel are provided for each of the nine flux traps. In addition, there are 19 penetrations in the reactor vessel wall that can be used for experiment hardware access.

Five of the nine flux traps contain IPTs for PWL facilities. IPTs are currently installed in the north (N), northwest (NW), southeast (SE), southwest (SW), and west (W) flux traps. The remaining four flux traps contain capsule irradiation facilities. Capsule irradiation facilities are currently installed in the northeast (NE), east (E), south (S), and center (C) flux trap positions. The capsule irradiation facilities are cooled by reactor water and allow easy insertion and removal of irradiation capsule assemblies. Tubular safety rod assemblies, installed in selected flux traps, surround the experiment facility in those flux traps. The non-loop irradiation facilities are cooled by reactor primary water. There is room for larger experiment facilities in the flux traps without safety rods. There are also capsule irradiation spaces surrounding the center flux trap, in the neck shim housing, in the beryllium reflector and outside the core reflector tank.

Experiments conducted outside the reactor vessel are primarily gamma irradiations of various materials using either irradiated reactor fuel elements or activated material from the reactor as the irradiation source. In some cases, the relatively low level direct radiation from the reactor vessel has been used as a source. These experiments are primarily conducted in the canal which is described in Chapter 9 (Auxiliary Systems). As with all experiments, experiments conducted outside the reactor vessel require an ESA.

The following subsections provide a general description of the in-vessel experiment facilities and experiment handling operations. The general requirements for the ESA and the experiment review and approval process are also discussed in the following subsections. Subsequent chapter sections provide more detailed descriptions of the experiment facilities and the experiment facility- specific requirements for the ESA.

10.1.1 Pressurized Water Loop Experiment Facilities

The PWL facilities or loops, installed in the N, NW, SE, SW, and W flux-traps, and the PWL experiments have the greatest significance to the ATR safety analysis. These facilities and experiments are therefore described in more detail than the other experiment facilities and experiments. The PWL facilities are used to conduct research on reactor materials and fuels in a controlled environment. The PWL facilities consist of an IPT where the irradiations are performed and associated out-of-pile equipment to control the irradiation conditions. PWL experiment assemblies that are inserted into the IPT consist of an IPT closure device, an experiment hanger rod, and the experiment hardware. The IPT interfaces with the reactor vessel. The top and bottom reactor vessel head penetrations for the five PWLs accommodate (a) the access for experiment insertion, (b) upper support for the IPT assembly, and (c) the egress for the lower end of the IPT into the reactor sub-pile room. In the sub-pile room, welded connections are made to associated out-of-pile piping and to equipment located external to the reactor in shielded cubicles. For the NW PWL facility there is cross-arm piping from the large inpile tube (LIPT) that exits the reactor vessel through an access penetration in the nozzle trench which is welded to the associated out-of-pile piping. Discussions of the design bases, description, safety evaluations, and testing and inspection requirements for the PWLs are provided in Section 10.2.

10.1.2 Capsule Experiment Facilities

There are in-vessel capsule irradiation facilities in the flux traps, neck shim housing, reflector and outside the reflector tank as shown in Figure 10.1-1. The capsule positions are cooled by reactor primary coolant water and allow easy insertion/removal of irradiation capsule experiments. Experiments designed for these facilities are encapsulated fuel and material specimens or target materials for neutron activation. Capsule experiments range from simple "drop-in" irradiation targets to more complex "lead" experiments. A "drop-in" capsule consists of an encapsulated experiment contained in a basket designed to interface with the reactor capsule facility. A "lead" experiment is an encapsulated experiment with instrumentation lines exiting the capsule and can have a system for measuring and controlling the experiment temperature and pressure. The capsule irradiation facilities and experiments have less significance to the ATR safety analysis than the PWL facilities and experiment; therefore, this UFSAR contains less material on these facilities.

Capsule irradiation facilities are currently installed in the NE, E C, and S flux trap positions. Typically the flux-trap capsule irradiation facilities are supported from the bottom head closure plugs up to just below core level in the northeast flux trap position. The irradiation facility in this position occupies the in-core section of the flux trap and rests on the lower support tube. Figure 10.1-1 also identifies 16 "H" hole capsule irradiation spaces (two of which have tubes for the N-16 system) surrounding the center flux trap, 16 "A" hole capsule irradiation spaces located in the neck shim housing, 12 "B" hole capsule irradiation spaces located in the beryllium reflector inside the shim drum ring, 24 "I" hole capsule irradiation spaces located in the beryllium reflector outside the shim drum ring, and 34 "O" hole capsule irradiation spaces (12 on the north and 22 on the south side of the core) located outside the core reflector tank.

10.1.3 Canal Experiments

Experiments are also conducted outside the reactor vessel. These experiments have little significance to the ATR safety analysis and are only briefly discussed. The primary permanent facilities for out-of-vessel experiments are the small gamma facilities located in the ATR canal. A small gamma facility can be installed in a fuel storage grid in the ATR canal to provide for gamma irradiations of materials using irradiated ATR fuel elements as the gamma source. Other out-of-vessel experiments have been conducted using temporary hardware installations.

10.1.4 Experiment and Experiment-Related Hardware Handling

For the PWL facilities, IPT and flow-tube assemblies and individual experiments (also called test trains) are inserted into and removed from the reactor through the top head shielding plate into shielded casks. Following removal, irradiated IPT and flow tube components are transferred to the ATR canal for examination, storage, or disposal. Irradiated experiments are either stored in the ATR canal or transferred in the handling cask by a transporter to the program sponsor's facility for disassembly and examination.

Other experiments (such as capsules or instrumented leads) are manipulated with specialized handling tools through refueling ports surrounding the top periphery of the reactor vessel. These types of experiments are usually inserted into and discharged from the reactor directly from/to the canal by means of a transfer tube operated from the canal parapet. New capsule (including instrumented leads) experiments are typically inserted through the refueling ports; however, capsule experiments installed in a flux trap can be inserted into and removed from the reactor through the top shielding plate into shielded casks.

Discussions of the design function, description, evaluations, testing, and examination of the various handling tools and equipment are provided in Section 10.4.

10.1.5 Classification of Experiment Structures, Systems, and Components

Based on conclusions derived from the safety analyses and using the equipment classification guidance in Chapter 3 (Design of Structures, Components, Equipment, and Systems), none of the PWL structures, systems, or components (SSC) are engineered safety features or safety-related equipment (House 1992). However the IPTs, vessel seals, loop piping, IPT annulus helium system, IPT annulus moisture detection system, subsystems of the Loop Operating and Control System (LOCS) detailed in Section 10.2.2.4.1, and cubicle shielding are important to safety; therefore, General Design Criterion 70, as outlined in Chapter 3 (Design of Structures, Components, Equipment, and Systems), is applicable to these SSC. General Design Criterion 70 requires that the experiment facilities and their associated out-of-reactor SSC important to safety shall meet applicable overall requirements of General Design Criteria 1 through 5. These criteria are met for the important-to-safety PWL SSC as discussed below.

- General Design Criterion 1-Quality Standards and Records. Application of Chapter 17 (Quality Assurance) for experiment SSC important to safety ensures the compliance to General Design Criterion 1.

- General Design Criterion 2-Design Bases for Protection Against Natural Phenomena. The discussion in Chapter 3 (Design of Structures, Components, Equipment, and Systems) for General Design Criterion 2 is applicable for cubicle shielding. Seismic loadings for the IPTs (and vessel seals) were investigated in the reactor vessel seismic analysis (Davidson 1978) and the deflections of the IPTs were less than 0.02 in. These small deflections do not cause damage to the IPT and, therefore, the IPTs are seismically qualified. Sudden catastrophic failure or rupture of loop piping caused by a seismic event is beyond-design-basis (Hendrickson 1997b). After a seismic event at a level that would cause the PPS seismic subsystem to trip, the loop facilities will be inspected using Hendrickson (1997d) to ensure the loop facilities were not damaged during the event. As the LOCS is not required to maintain operability during or after a seismic event, the LOCS equipment was designed for personnel safety to conform with the requirements of the Uniform Building Code (UBC) for Static Zone 2B locations (ICBO 1991).

- General Design Criterion 3-Fire Protection. Fire protection for experiment SSC is provided by the ATR fire protection system as described in Section 9.5.1, Fire Protection Systems, in Chapter 9 (Auxiliary Equipment) as there are no specialized requirements for fire protection of the experiment SSC.

- General Design Criterion 4-Environmental and Dynamic Effects Design Bases. The environmental design criteria for the experiments SSC important to safety are listed in Ebasco (1963), EG&G Idaho (1988a, 1988b) and INEEL (1999, 2003). As discussed in Chapter 3 (Design of Structures, Components, Equipment, and Systems) for Criterion 4, the missile suppression shield plugs prevent experiments from being ejected from an IPT. The majority of loop piping and mechanical machinery is contained in separate cubicles, so that, should a failure occur, damage due to pipe whipping or missiles from rotating machinery will be isolated from safety-related equipment or other SSC important to safety. The evaluation in Snow (1998a) concludes that the high frequency (Condition 2) failures of small diameter tubing will not result in failures of the loop piping. The pipe whip from failure of the larger diameter loop piping may lead to additional failures within the same cubicle; however, this would not result in a more severe accident sequence than the analyzed

Condition 4 failure of the large diameter loop piping. Dose consequences are enveloped by complete melting of the experiment fuel and reactor consequences are enveloped by the reactivity insertion from the initial depressurization. However, there is loop piping in the subpile room, subpile room pipe corridor, and the nozzle trench, and a pipe whip event that affects safety-related equipment or other SCC important to safety could occur if guillotine break occurs in the loop piping. Complete circumferential rupture of loop piping in the subpile room, subpile room pipe corridor, and nozzle trench is shown to be beyond design basis using leak-before-break analysis (Atkinson 1998).

- General Design Criterion 5-Sharing of Structures, Systems, and Components. Application of Section 10.1.7.3.6 (Failure of Common Systems) of this chapter for all experiment equipment ensures compliance to General Design Criterion 5. Evaluations and analyses associated with the PWL experiment facilities are conducted routinely to evaluate potential interactions between the experiment systems and reactor for each operating cycle, and to assess the experiment systems and components relative to any proposed modifications to the currently approved configuration or service limits.

Classification of the capsule and canal experiment SSC and the applicability of General Design Criterion 70 to capsule experiment SSC are addressed on a case basis in the ESA for the capsule.

10.1.6 Experiment Safety Analyses

In addition to providing a detailed description of the experiment, the ESA demonstrates the operations required to support irradiation of each experiment, including operations of any supporting systems consistent with the approved facility risk envelope. The reactor, experiment, and experiment support systems must be operated within the conditions and assumptions of the ESA. The ESA demonstrates that the ATR Plant Protection Criteria are met for all operating conditions (Conditions 1, 2, 3, and 4) and all applicable operating modes. The analyses considers:

- Effects of plant transients on the experiment
- Effects of normal and off-normal conditions in the experiment and supporting systems on the plant, onsite personnel and public
- Thermal performance of the experiment
- Material content and material containment of the experiment, the structural integrity of the experiment and supporting systems, including the effects of irradiation, operating conditions, and off-normal conditions
- Potential for the experiment and supporting systems to initiate off-normal conditions in the plant
- Full range of facility operations and operating modes required to support irradiation of the experiment
- Unreviewed safety question issues related to the experiment.

This program of ESA allows maintaining the flexibility to accommodate new experiment programs while ensuring experiments are conducted within the approved facility risk envelope.

Some experiments have the potential for initiating events that present a challenge to the integrity of the cladding of fuel elements in the reactor or stored in the canal; the UFSAR includes analyses of various experiment related events. These events include (a) voiding a flux trap and subsequent reactivity excursion associated with the failures of the out-of-pile loop (OPL) piping, including a double-ended offset shear; (b) failure of the upper and lower "dummy" IPT/reactor-vessel penetration seals; (c) flow bypassing the maximum useful capacity holder (MUCH); (d) gas leakage into fuel annulus; (e) handling of experiments using shielded casks; (f) heatup in the loops leading to boiling, dry out, and possible experiment damage, including melting of fueled specimens; and (g) fissile experiment handling. Items (a) through (f) are discussed in further detail in Chapter 15 (Accident Analyses) and item (g) is discussed in Chapter 9 (Auxiliary Systems). These analyses demonstrate that experiments can be conducted within the approved safety envelope. In most cases, these analyzed events are referenced in the ESA to support conduct of the experiment. In some cases, the experiment specific initial conditions or potential reactivity insertions may not be clearly bounded by those in the Chapter 15 analysis. In these cases, the ESA includes detailed analysis of the specific experiment parameters and operation to show compliance with the ATR Plant Protection Criteria.

The ESA addresses the experiment process from receipt at the Test Reactor Area (TRA) until the experiment leaves the TRA boundary. The experiment process includes handling, assembly/disassembly, and operation. For the portion of the experiment process in the ATR facility, the ESA demonstrates that the experiment, experiment facility, experiment operation, and consequences of fault conditions comply with the ATR safety envelope as described in the UFSAR and as implemented in the Technical Safety Requirements (TSRs). The safety concern posed by an experiment may depend solely on its location and/or on the conduct/operation of the equipment. Thus, portions of an ESA may be provided as the need arises. This concept is useful in allowing an evaluation for the installation of an experiment separate from the operation, since the details of the operation may not be fully developed in the early stages of experiment development. General guidelines for experiment safety analyses for all types of experiments are addressed below in Section 10.1.7.

10.1.7 General Experiment Safety Analysis Criteria

The following subsections detail general safety criteria for experiments in the ATR facility. These criteria were derived from the results of the accident analyses in Chapter 15 (Accident Analyses) and Regulatory Guide 2.2 (NRC 1973). These criteria are comparable to the ESA criteria in use prior to the development of this UFSAR.

General and specific experiment safety analyses criteria have been developed for guidance in the preparation of ESA that meets the requirements of Section 10.1.6. The specific experiment safety analyses criteria are provided in accordance with the significance of the experiment to reactor safety. That is, there are more specific experiment safety analyses criteria for the PWL facilities than for the capsule facility experiments since the PWL facilities have more potential for impacting reactor safety. General experiment safety analysis criteria are provided in this section. Specific experiment safety analyses criteria are provided in Section 10.2.6 for PWL facility experiments and in Section 10.3.5 for capsule facility experiments.

10.1.7.1 Primary Experiment Safety Analyses Criterion. The primary experiment safety analyses criterion applicable to all experiments is:

> The consequences of normal operation of the experiment and of any experiment fault must be bounded by the ATR Plant Protection Criteria for the same operating condition (i.e., Conditions 1, 2, 3, and 4 as defined in Chapter 15 [Accident Analyses]).

This primary experiment safety analyses criterion applies whenever the experiment is within the ATR facility. The ATR Plant Protection Criteria are defined in Chapter 15 (Accident Analyses).

10.1.7.2 General Experiment Safety Analyses Criterion for Experiments Containing Fissile Material. The following general experiment safety analyses criterion must be met for any experiment containing fissile material:

> The experiment fissile material form and content must be shown to be enveloped by the existing criticality safety evaluations described in Chapter 9 (Auxiliary Systems) and the TSR administrative controls for nuclear criticality safety.

This general experiment safety analyses criterion for experiments containing fissile material applies whenever the experiment is within the ATR facility. If this criterion is not met, additional criticality safety evaluations and appropriate changes to the TSR administrative controls must be made prior to conducting the experiment.

10.1.7.3 Mechanical Design Criteria for Experiments. The following mechanical design criteria must be met for experiments. Exceptions to the mechanical design criteria can be made, provided the exceptions do not constitute an unreviewed safety question, and the exceptions are addressed in the ESA. Additional experiment safety analyses criteria for PWL and capsule experiments are developed later in this chapter in the sections providing more detail about these types of experiments.

10.1.7.3.1 Experiment Containment Fault Categories—The experiment containment minimum fault probabilities are based on the following guidelines. Chapter 15 (Accident Analyses) provides further guidance for establishing probability categories for faults other than experiment containment failures.

- Condition 2 Fault—For experiment containment, a Condition 2 fault is defined as failure of a single vessel not meeting applicable American Society of Mechanical Engineers (ASME) Section III, or equivalent code requirements.

- Condition 3 Fault—For experiment containment, a Condition 3 fault is defined as failure of a single vessel meeting applicable ASME Section III or equivalent code requirements.

- Condition 4 Fault—For experiment containment, a Condition 4 fault is defined as failure of a single vessel meeting applicable ASME Section III or equivalent code requirements that is surveyed for the development of leaks or flaws or as an independent failure of two vessels, each meeting applicable ASME Section III or equivalent code requirements that are not surveyed for the development of leaks or flaws.

These criteria apply for all experiments in the ATR facility.

10.1.7.3.2 Code Compliance of Experiment Containment—Experiment containment that holds pressure greater than 235 psig, or contains material that can generate pressure pulses greater than 430 psig, must have a design that meets the intent of ASME Section III, Class 1 standards, or the ability, demonstrated by prototype testing or other means, to withstand service conditions without failure.

For PWL piping structures, systems, and components, ASA B31.1-1955 or USAS B31.7-1969 code requirements are considered to be equivalent to ASME Section III with regard to this specific experiment safety criteria.

This criterion applies for all experiments in the ATR facility.

10.1.7.3.3 Containment of Materials—Materials which are incompatible with the reactor fuel element cladding, the reactor primary coolant, canal water coolant, or with the reactor primary coolant system (PCS) structural materials must be contained to ensure they are not released to the PCS or canal as a result of a Condition 2 or 3 fault.

Incompatible materials, normally used as activation monitors, must be secured to minimize the likelihood of being lost in the reactor PCS. The following are examples of materials which are chemically incompatible with the PCS: mercury, gold, copper, silver and chlorides. Gold, silver, or other properly reviewed materials may be used as activation monitors, provided they are secured so that the material cannot be lost into the reactor PCS. The preceding materials list is not all inclusive, there are other materials not listed that are incompatible with the reactor fuel element cladding.

These criteria apply for all experiments in the ATR facility.

10.1.7.3.4 Excluded Materials—The following materials are not permitted in an experiment or loop facility within the reactor biological shielding:

- Unknown Materials - No experiments shall be performed unless the material content, with the exception of trace constituents, is known.
- Explosive materials with an equivalent of ≥ 25 mg of TNT. (Explosive material is a solid or liquid which has an explosion hazard in water or steam, as defined in Lewis (1990), and is used in a configuration that can detonate and produce a shock wave.)
- Cryogenic liquids.

These criteria apply for all experiments in the ATR facility.

10.1.7.3.5 Evaluation of Materials—The following materials are not used in experiments unless such usage is shown to be in compliance with the primary experiment safety analyses criterion in Section 10.1.7, and the compliance analyses are completed prior to insertion in the reactor vessel or canal.

- Radiologically hazardous activation products
- Radiation sensitive materials

- Highly flammable or toxic materials, per se or as by-products of radiation sensitive materials

- Reactive Materials which are defined as any solid or liquid which has a reactivity index of 2 in National Fire Protection Association Publication 704 (NFPA 2001) or has a disaster or fire hazard indicating detrimental reactions in water or steam Lewis (1990).

These criteria apply for all experiments in the ATR facility.

10.1.7.3.6 Failure of Common Systems—The failure of systems that are common to both the experiment facilities and experiments and to the plant will not cause interactions (from this common use) that result in total consequences exceeding those specified by the IPT Protection Criterion in Section 10.2.6.1 and ATR Plant Protection Criteria discussed in Chapter 15 (Accident Analyses) for Conditions 2, 3, and 4.

This criterion applies for all experiments in the ATR facility.

10.1.7.3.7 Physical Layout—Components of experiment facilities are located and oriented to preclude physical interference with personnel evacuation or with safety related systems, structures, and components. If displacement of system shielding is involved, measures are to be taken to ensure radiation levels are below the ATR Plant Protection Criteria for occupational exposure.

This criterion applies for all experiments in the ATR facility.

10.1.7.4 Thermal Hydraulic Criterion. The conduct of the experiment must not adversely affect decay heat transfer from the canal fuel elements or heat transfer from the PCS.

This criterion applies for all experiments in the ATR facility.

10.1.8 Experiment Reviews, Verification, and Approvals for All Experiments

The following reviews, verifications, and approvals of experiments are completed to ensure that all experiments have adequate quality assurance, safety analyses, management review, and independent safety review.

10.1.8.1 Quality Review. The design, fabrication, testing, and material content of all contractor-supplied experiment hardware are verified in accordance with the contractor's Quality Assurance Program (See Chapter 17, Quality Assurance). For experiment hardware supplied by other organizations, the design, fabrication, testing and material content are verified in accordance with a Quality Program that has been reviewed by the contractor and found to meet the intent of applicable sections of the contractor Quality Assurance Program or the contractor verifies that the experiment meets the intent of the applicable sections of the contractor Quality Assurance Program. These quality reviews are documented in the ESA.

10.1.8.2 Supporting Analyses. The contractor is responsible for the adequacy and accuracy of supporting analyses submitted by experimenter organizations. The operation of each experiment facility is compared with the facility design specification to ensure that it is properly enveloped. Each experiment is compared to the safety analyses envelope to ensure consistency with the assumptions made in the analyses.

10.1.8.3 Independent Safety Review. Each ESA has an independent safety review.

- A Contractor-designated, multi-disciplined independent safety review committee reviews each experiment and the analyses used to verify compliance to this UFSAR and the TSR, and presents any recommendations to the Reactor Programs Director.
- The independent safety review committee concurs with conducting the experiment.
- The independent safety review committee keeps records of the review for each experiment or class of experiments.

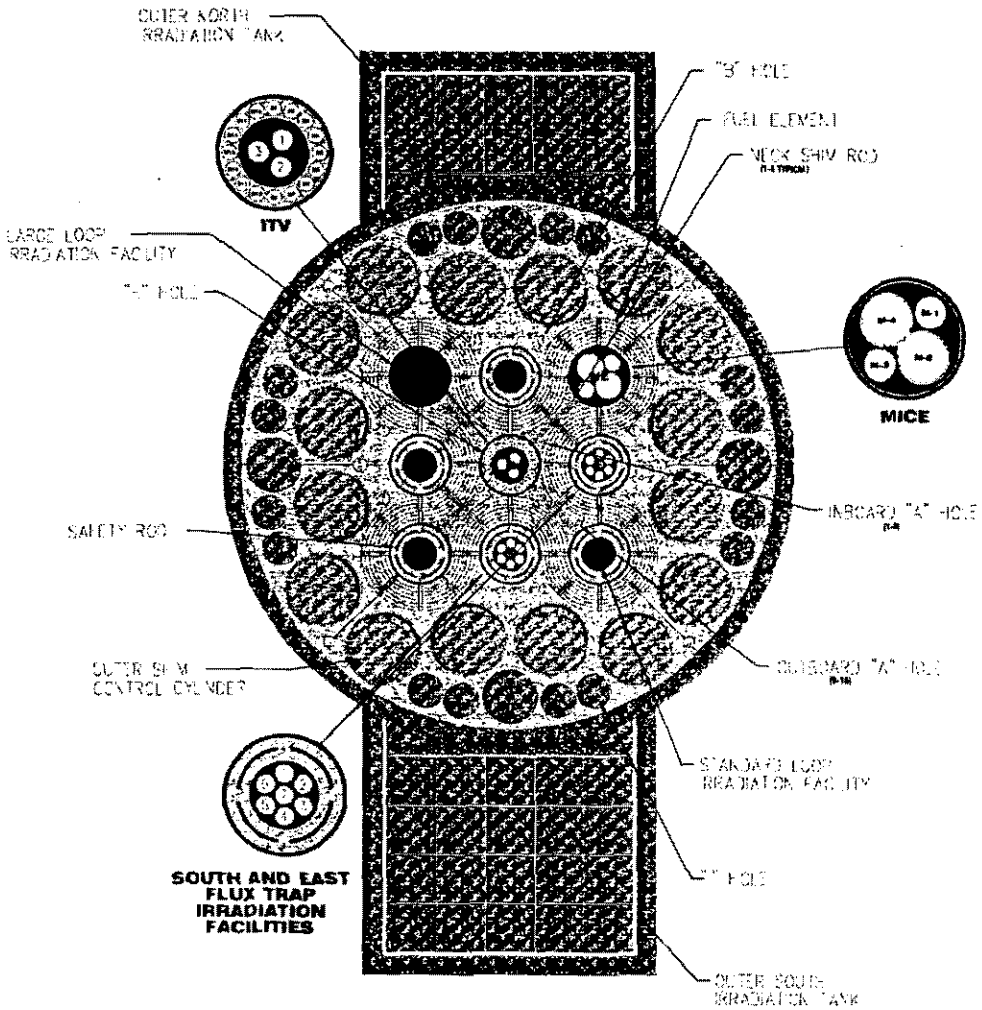

ATR CORE
CROSS SECTIONAL DIAGRAM

Figure 10.1-1. Representative ATR core plan view. **(For Information Only)**

10.2 Pressurized Water Loop Experiment Facilities

The ATR has operated with various numbers of PWL experiment facilities. There are currently five PWL facilities which consist of IPTs, out-of-pile piping, common auxiliary support systems, and the (LOCS). The five IPTs are located in the N, NW, SE, SW, and W flux-trap positions. The OPL equipment necessary to control the environment of the PWL experiments (for example; pumps, heaters, heat exchangers, flow and temperature control valves) is located in shielded cubicles in the first and second basements of the reactor building. Auxiliary systems provide secondary cooling, power, ventilation, PWL water makeup and chemistry control, and PWL monitoring functions in support of loop operation. The LOCS provides the capability to (a) monitor and control various PWL parameters as necessary to establish and maintain the environmental conditions specified by the experiment sponsor and (b) to initiate mitigative actions.

10.2.1 Pressurized Water Loop Inpile Tubes

The IPT assembly consists of an envelope tube and a pressure tube. The IPTs are located in the N, NW, SE, SW, W flux-traps identified in Section 10.1, Figure 10.1-1. Currently, there are three basic IPT designs in use.

The first design is the Standard Inpile Tube (SIPT), which is the original IPT design. The second IPT, designed to operate in conjunction with the ATR High Temperature Loop (AHTL), is identified as the AHTL IPT. While the AHTL IPT has a thicker envelope-tube wall (0.1395 in. versus 0.1205 in. for the SIPT) that enables it to be used at higher temperatures and pressures, its other design features are similar enough to the SIPT to make some of the supporting analyses identical for both designs.

The third IPT design is the LIPT, which accommodates larger-diameter experiment assemblies operating at SIPT temperature and pressure (Refer to Figures 10.2-9 and 10.2-10). The LIPT was designed for installation in a flux trap without a safety rod and uses the maximum space inside of the flux trap baffle. LIPT total flow is significantly higher than SIPT flow to provide similar flow velocities through the experiment. Even though the LIPT differs both in design and functional operating configuration from the SIPT and AHTL IPT, the design function for all IPTs is similar enough that a detailed description of only the SIPT is presented in this section. Where appropriate, the differences between the SIPT, LIPT, and the AHTL are noted by reference to the applicable supporting design specifications and analyses.

The number, size, location, and specific design features of the installed array of IPTs are determined by the PWL experiment sponsor's test program and budget. There have been several configurations over the lifetime of the reactor. The current configuration with three SIPT, one LIPT, and one AHTL IPT was installed during the 1994 core internals change out. The previous configuration used all nine flux traps with six SIPT, two LIPT, and one AHTL IPT. The reactor power distribution and the specific experiment loading for a given reactor operating cycle are specified to satisfy the experiment program sponsor's requirements. The operating requirements must be formally analyzed and documented as being within the constraints imposed by the General and Specific PWL ESA Criteria, UFSAR, TSR, ATR Plant and IPT Protection Criteria, and the approved configuration and analytical operating envelope for the inpile and out-of-pile portions of each PWL facility.

An experiment sponsor's request for operation of an IPT and experiment must fall within the approved configuration and analytical operating envelope. Otherwise, additional analyses, including an unreviewed safety question determination, are required to confirm the acceptability of the proposed experiment. The expanded analyses and supporting approval become a part of the operating envelope and are documented as being within acceptable limits for the intended core and experiment loading as described in the safety documentation for the reactor cycle.

10.2.1.1 IPT Assembly Design Bases. The following subsections provide a summary of the design bases for the major components on the SIPT assembly in terms of the applicable design codes, functional performance and design service limits. Where appropriate, a discussion is included of unique features of the AHTL IPT and the LIPT.

10.2.1.1.1 IPT Design Bases—The IPT constitutes a significant source of energy when operated at temperature and pressure. The IPT assembly constitutes a portion of the reactor vessel pressure boundary at the points of penetration through the top and bottom head of the reactor, and for the LIPT where the cross arm piping exits the reactor vessel wall. Therefore, all IPTs are designed, analyzed, and constructed according to ASME Boiler and Pressure Vessel Code Section III Class 1, without the "N Stamp" certification. The design basis for the IPT is to prevent the release of energy to the reactor and to prevent a loss of integrity of the reactor vessel pressure boundary. The "N stamp" is a "tag" to show that a component meets ASME Section III requirements. The stress analyses for the IPT (Harris 1983, 1988; Goodell 1986) show that the ASME Section III requirements are met. Because the IPTs are vessels within a reactor vessel, they are not easily accessible and tagging is not applicable. The "N stamp" is primarily used for quick identification of Section III components within a system.

The IPT assembly consists of an envelope tube and a pressure tube. The envelope tube provides an annular space which is filled with helium gas to provide (a) temperature insulation to reduce heat losses to the reactor primary coolant, (b) a medium suitable for detecting a leak of reactor coolant or loop primary coolant into the annular space between the pressure tube and envelope tube, and (c) an external pressure on the IPT pressure tube as required by design stress requirements for operation of the AHTL IPT and the LIPT. The pressure tube provides containment of the loop water.

Analyses and requirements documents supporting each IPT design include engineering specifications, system design descriptions, and reports containing the specific design basis parameters; service limits for normal, upset, emergency and faulted conditions; required testing and analyses; and inservice inspection requirements (as analyzed for operation in specific flux traps). These documents, listed in Section 10.2.1.3, also identify the applicable design drawings and other applicable codes and standards. Sections 10.2.1.3 and 10.2.1.4 and associated references address items necessary to ensure compliance with the IPT design basis to prevent release of energy to the reactor and loss of integrity of the reactor pressure boundary. The AHTL IPT may be operated at SIPT pressures and temperatures or elevated temperatures and pressures. The specific source power and design service limits of the AHTL IPT are based upon the operating conditions. The current design analyses for a SIPT and when the AHTL IPT is operating at SIPT conditions (≤ 2500 psig) are based on a maximum source power of 60 MW; a maximum source power of 50 MW for the AHTL IPT at elevated temperature and pressure (> 2500 psig); a maximum source power of 34 MW for the LIPT; and design service parameters, including:

- Maximum average pressure tube wall temperature (≤ 800°F).
- PWL design parameters (e.g., flow, temperature, internal and external pressure, and pressure differential) and experiment design parameters (e.g., total fission power, fission power distribution, and material content).

- Inpile tube induced reaction forces with the reactor vessel, reactor internals, and OPL piping.
- Mechanical and nuclear design life; mechanical service life is based on pressure and thermal cycles allowed by code, and nuclear service life is based on fast neutron fluence (> 1 MeV) and attendant fracture toughness and creep strain.
- Loop coolant chemistry as related to pressure tube conditioning and stress corrosion.
- Mechanical loadings on the pressure tube closure assembly components.

The term *source power* is used in the analyses of experiment facilities; the source power is the power generated in the vicinity of the experiment facility. For inner flux traps (i.e., those inside the fuel annulus), the source power is the local lobe power. For the outer flux traps, the source power is the average of the three adjacent lobe powers.

10.2.1.1.2 IPT Top Closure Assembly Design Basis—The IPT top closure assembly serves as the pressure barrier between the primary loop pressure vessel and the shielded area above the reactor top head. The design basis for the closure assembly is to prevent uncontrolled release of primary loop coolant at or below the settings of the loop safety relief systems, as described in the PWL piping design specifications and IPT design specifications. While a credible mechanism for catastrophic failure of the IPT closure assembly has not been identified, postulated failure of the primary loop pressure boundary and voiding of an IPT have been analyzed. The analyses are presented in Chapter 15 (Accident Analyses).

10.2.1.1.3 IPT Top and Bottom Head Closure Seal Design Basis—The seal between the IPT top closure assembly and the reactor top head, and the seal between the envelope tube and the reactor bottom head, are elements of the reactor vessel pressure boundary. The design basis for these two seals is the prevention of undetected and uncontrolled leakage of reactor primary coolant. Analyses of the consequences of accident sequences associated with the failure of these closure seals are based on larger reactor primary piping failures as described in the ATR Probabilistic Risk Assessment (PRA) (Thatcher et al. 1994) and Chapter 15 (Accident Analyses).

10.2.1.1.4 IPT Experiment and Hanger Rod Design Function—A PWL experiment assembly for insertion into an IPT consists of an IPT closure plug, a hanger rod, and the experiment or test train. The IPT experiment components, hanger rod, and closure plug all position the experiment relative to the reactor core. The design function of these components is (a) to prevent movement or displacement of the experiment from the position specified for the experiment during the reactor cycle, and (b) to ensure the analyzed flow around and through the test section.

10.2.1.2 IPT Assembly Description. The IPT assembly is approximately 40 ft long. The SIPT pressure tube has an inside diameter of 2.123 in. and the LIPT has an inside diameter of 4 in. From its closure assembly located in a penetration in the reactor top head, the IPT runs down through the corresponding flux trap formed by the 40-element serpentine core, and exits the reactor vessel into the sub-pile room through a penetration in the reactor bottom head. The IPT assembly includes inpile and sub-pile room components that are joined by welding at the time of installation; the assembly acts as an inlet and outlet for piping running to a shielded cubicle, forming a closed recirculating water system. The basic description of the AHTL IPT assembly is identical to that for the SIPT, with the exception of the envelope-tube wall thickness, as discussed in Section 10.2.1. For the LIPT, the outlet piping run begins at the cross-arm piping, which is welded to the IPT inside the reactor vessel, and extends through the reactor vessel at an access flange into the nozzle trench corridor to return to the shielding cubicle. A view of typical SIPT elevations is shown in Figure 10.2-1 and a typical LIPT assembly is shown in Figure 10.2-9.

10.2.1.2.1 IPT Installation—At the time of installation, the bottom end of the IPT is welded to a matching concentric piping assembly in the sub-pile room. A schematic of this offset piping assembly is shown in Figure 10.2-2. This sub-pile room component piping assembly consists of a pressure tube, and for the SIPT and the AHTL IPT, flow tube extensions that extend from the point of connection with the pressure tube, across the sub-pile room, and down into a trench in the sub-pile room floor. The envelope tube of the IPT terminates in a bellows and welded seal (AHTL IPT and LIPT), or compression seal (SIPT), with the pressure tube below the reactor bottom head. This bellows seal or compression seal accommodates vertical differential expansion between the pressure tube and the envelope tube. Details of the bellows seal are shown in Figure 10.2-6.

Below the seal, the concentric inlet and outlet piping for the SIPT and the AHTL IPT are physically separated by means of a piping assembly. Also at this location, for all IPT designs, the piping assembly includes a shielded particle trap located at the bottom of the sub-pile room pressure tube extension that is set below floor level at the end of the piping trench. This offset piping run, from its welded juncture with the IPT to the shielded particle trap, also has thermal insulation and removable lead shielding.

Below the reactor vessel top head, alignment and lateral support for the IPT assembly are provided at the top of the reactor neck shim housing by a locator tie and, at the point of penetration of the reactor vessel bottom head, by a gland seal arrangement. To compensate for the dead-weight loads produced by the tube assembly and lead shielding in the sub-pile room, a constant load hanger is provided at the lower end of the pressure tube offset piping. Details of the piping assembly and shielded particle trap are also shown in Figure 10.2-2 for the SIPT and the AHTL IPT.

10.2.1.2.2 IPT Closure Assembly Description—The IPT closure assembly consists of a closure housing, closure sleeve with threaded locking ring, and closure plug with threaded locking ring (shown in cross section in Figure 10.2-4). The closure sleeve is a concentric spacer, which is sealed to the closure housing with dual rubber O-rings and is locked in place by a locking ring threaded into the closure housing. The closure plug (a) closes the opening of the pressure tube, (b) is sealed to the closure sleeve with dual O-rings, and (c) is locked in place by a locking ring threaded into the closure sleeve.

The closure plug is keyed to the closure sleeve, which in turn is keyed to the closure plug housing to prevent rotation and to provide a preferred orientation of the experiment. The closure plug is bored to allow the exit of instrument leads, and is fitted at its top with a conax-type seal around the instrument leads.

10.2.1.2.3 IPT Top and Bottom Head Closure Seal Descriptions—The IPT assembly seats on a support ring that is milled on the inner surface of the penetration through the reactor vessel top head. The seal between the IPT upper closure assembly and the reactor vessel top head is made by double O-rings mounted in recesses in the outer diameter of the closure assembly. Figure 10.2-5 provides a cross section of this upper seal configuration.

The IPT assembly passes through the reactor vessel bottom head, and the reactor primary coolant is sealed off using graphite compression ring mechanical seals referred to as freeze seal units. These units bolt and seal to the bottom of the snubber tube assemblies, and the graphite compression rings accommodate vertical movement of the IPTs due to thermal expansion. A typical seal configuration is shown in Figure 10.2-7 and Figure 10.2-10 for the LIPT.

10.2.1.2.4 IPT Experiment and Hanger Rod Description—The experiment consists of interlocking holders containing irradiation specimens. Each holder has male and female interlocking lugs to allow assembly of a holder stack. The holder stack is secured by a retainer tube or shroud. The retainer tube can contain flux tailoring neutron poison materials. Depending on their design, experiments can contain fuel, structural material, instrumentation and/or poison materials. In addition, the individual holders within the test train and the spacing of the test specimens within each holder determine the experiment test flow.

A PWL experiment assembly for insertion into an IPT consists of an IPT closure plug, a hanger rod, and the experiment or test train. The hanger rod, attached to the IPT closure plug, position an experiment vertically within the IPT and, hence, the reactor core. Flow from the loop pumps is directed out of the shielded cubicle, through the loop piping in the piping corridor, to the sub-pile room, and into the IPT. The SIPT and AHTL IPTs have a bottom reentrant coolant-flow configuration. Flow through the IPT can be routed in one of two ways. Usually the flow is routed up through the experiment and flow tube, then through ports in the upper end of the flow tube. Then, flow is reversed, running down through the outer annulus formed between the flow tube and pressure tube, and then back to the loop cubicle. This is referred to as up-flow configuration. Flow direction through the inpile tube can also be routed up the annulus formed between the flow tube and the pressure tube. Flow is then reversed near the upper end of the inpile tube and is routed down through the test assembly, and flow tube, and out to the loop cubicles.

The flow tube is a stainless steel tube which is inserted into the IPT. The flow tube seats in the flow tube receiver which is part of the subpile room piping (Refer to Figure 10.2-3). Metal piston rings at the bottom of the flow tube provide the seal. The flow tube is secured in place by the closure sleeve and the closure sleeve locking ring (Refer to Figure 10.2-4).

In the MUCH (Refer to Section 10.2.5.2) experiment, the function to flow tube is replaced by the shrouds for the experiment. With the flow tube removed, the diameter of the experiment shrouds was enlarged allowing a larger diameter for experiment holders/specimens.

The IPT hanger rod is bolted and lock-wired to the bottom of the closure plug. The lower end of the hanger rod engages the top of the experiment. The holders and the bottom of the hanger rod are attached by a mechanical joint held in place by a retainer clip and a series of shrouds that run the length of the test train to a nose piece at the bottom of the experiment (Figure 10.2-8).

10.2.1.3 IPT Assembly Evaluations. The major components of the IPT assemblies are designed, fabricated, and operated in accordance with requirements presented in Section 10.2.1.1.1. Since the original complement of IPTs was fabricated, additional evaluations and analyses have been performed to extend the original design life, or to expand the original design and service limits for operating these facilities, in response to the changing requirements of the irradiation program sponsors.

10.2.1.3.1 IPT Evaluations—The IPT design specifications and evaluations of the IPT assemblies are identified below with their supporting references:

- Inpile tube design specification (SIPT - EG&G Idaho 1988b; AHTL IPT - Edgett 1986; LIPT - EG&G Idaho 1983)
- Inpile tube operating temperature analyses (SIPT - Hendrickson 1996a; AHTL IPT and MUCH experiments in SIPT - Boodry and Hendrickson 1995; LIPT - Hendrickson 1995)
- Inpile tube stress analyses (SIPT - Harris 1988; AHTL IPT - Goodell 1986; LIPT – Harris 1983)

- Inpile tube fracture mechanics analyses (SIPT - Reuter 1988; AHTL IPT - Livingston 1986; LIPT - Livingston 1985)
- Inpile tube bowing analyses (Buescher 1994)
- Inpile tube seismic analyses (Davidson 1978).

The IPT operating temperature analyses listed above (Boodry and Hendrickson 1995; Hendrickson 1995 and 1996a) define the allowable IPT inlet and outlet temperature given lobe power, test fission power, IPT inlet pressure, and IPT inlet flow for non-MUCH tests or MUCH test flow, to ensure that the wall temperature of the IPT remains below 800°F and bulk water conditions are below saturation. This requirement is imposed on the average IPT wall temperature radially at the hottest location. The loop ESA will contain a comparison between the maximum allowable IPT temperatures and the IPT temperature scram setpoints for both the inlet and outlet temperature channels.

Reactor scrams from a high IPT inlet or outlet temperature, low IPT inlet pressure, low IPT inlet flow, and low MUCH test flow (for MUCH test) ensure adequate cooling of the IPT and experiment. For the AHTL IPT, there is an additional reactor scram from a high-pressure tube delta pressure which is necessary to protect the pressure tube from an over stress condition. Refer to Section 10.2.4.1 of this chapter for further details of the IPT protective channels.

The IPTs operate in a high radiation field. The neutron exposure will cause material degradation (such as loss of ductility) which reduces the fracture toughness. In order to ensure that the fracture toughness of the IPT remains high to prevent brittle fracture of the components, the allowable fluence for the IPTs has been analyzed (Livingston 1985 and 1986; Reuter 1988). The lifetime limit is a function of the stresses (limited by operating conditions and source power), fracture toughness, and the maximum flaw size. The fluence limit (n/cm^2 or nvt for energies greater than 1 MeV) for a SIPT and a 300 series stainless steel LIPT is 5.5E22 nvt. The analyses assume the maximum creep strain associated with fluence limit will be 1.8% or less; to verify the assumptions used (initial crack size and crack propagation rate), the analyses (Livingston 1985; Reuter 1988) require inspection of the IPTs to determine flaw sizes when the fluence is within 2 to 3E22 nvt. The fluence limit for the AHTL IPT is lower than the limit for the SIPT because of the more severe operating conditions (Livingston 1986). The AHTL IPT is limited to 2.7E22 nvt with an assumed maximum creep strain of 2.0%.

The fluence to the IPTs is evaluated using a combination of calculations and measurements. The analyses for each reactor operating cycle include projecting fluences to the IPTs. Measurement of flaw size in an irradiated IPT requires specialized techniques. Ultrasonic methods have been used successfully in the past; however, the measurement is demanding and requires sophisticated equipment. A conservative limit on fluence is established to allow operation without verification of flaw size after the installation of a new IPT. Measurement of the flaw size is required after significant embrittlement to support operation to the maximum lifetime.

Prediction of the creep strain is based on the operating history of the IPTs. Additionally, the creep strain can be directly measured using a bore gauge.

Operating the IPT within the design parameters for neutron fluence and creep provides assurance that failure of the inpile tube is remote. The probability of failure is considered beyond design basis; there is no credible failure that results in a compromise to the reactor fuel element cladding.

Each of the IPT fracture mechanics analyses (Livingston 1985 and 1986; Reuter 1988) have stress cycles that are tracked to ensure the stress cycles used in the analyses are not exceeded. The tracking of the stress cycles for each IPT is documented in the loop ESAP.

The gas annulus between the pressure tube and the envelope tube is monitored for moisture to verify the integrity of the envelope tube and the pressure tube during reactor operation.

The ESAP and Core Safety Assurance Package (CSAP) for each reactor operating cycle document (a) the formal analysis of the operation of a specific IPT assembly and experiment loading, and (b) the objective evidence that such operation in a given flux trap falls within the envelope of the defined parameters and service limits. Together, the preceding evaluations and analyses constitute the current basis for operating the IPTs.

10.2.1.3.2 IPT Closure Assembly Evaluation—Routine analytical evaluations are not required on the IPT closure assemblies beyond those associated with the requirements of the design code.

10.2.1.3.3 Vessel Wall Flange, Top and Bottom Head Seal Evaluations—Analytical evaluations are not required on the vessel wall flanges or the IPT top and bottom head seals beyond those associated with the requirements of the design code.

10.2.1.3.4 IPT Experiment and Hanger Rod Evaluations—Each experiment scheduled for irradiation is supported by a detailed data package supplied by the experiment sponsor. The data package information is reviewed, and additional independent analyses are performed as necessary, to predict thermal hydraulic and nuclear coupling of the experiment and reactor. Specific operating instructions, system alarm and corrective action setpoints, and limitations are included in an experiment operating information letter provided to the operations organization for each loop.

10.2.1.4 IPT Testing and Inspection Requirements. This section discusses the testing and inspection requirements for components of the IPT.

10.2.1.4.1 IPT Preservice Testing and Inspection—The IPTs are inspected during fabrication in accordance with requirements described in Section 10.2.1.1.1. The inspection includes 100% radiography, liquid penetrant examination of all welds, and hydrostatic testing of the completed assembly before installation of the outer envelope tube. Although the exterior surface of the pressure tube is inaccessible following the installation of the outer envelope tube, a visual inspection for gross distortion, straightness, and alignment is performed before inserting the IPT assembly into the reactor.

10.2.1.4.2 IPT Post-insertion Testing and Inspection—After inserting the IPT and welding it to the OPL piping in the sub-pile room, the installation weld is examined by radiographic and liquid penetrant methods. The IPT (pressure tube, envelope tube, and closure assembly) is then subjected to a hydrostatic pressure test consistent with code requirements.

Following the initial post-insertion tests, the IPT is inspected and tested in accordance with the *ATR Inservice Inspection Plan* (INEEL 2002). This plan describes the specific part or feature of the IPT to be examined, the examination requirements, method, acceptance criteria, and interval between inspections. The measurement of flaw size in the SIPT and LIPT, between a fast neutron fluence level of $\geq 2.0 \times 10^{22}$ n/cm^2 but $\leq 3.0 \times 10^{22}$ n/cm^2 and the bore gauge measurement of creep strain at one half and three quarters of the creep strain limits, is of particular importance to support the assumption that catastrophic failure of the IPT is beyond design basis. If the measured creep falls outside of the predicted creep range, an annual frequency measurement check is required. The tracking of fluences and creep strain and the results of measurements are reported in the ESA for each reactor operating cycle.

The following stress cycles are monitored in accordance with the IPT fracture mechanics analyses (Livingston 1985 and 1986; Reuter 1988). The tracking of stress cycles is included in the ESAP.

SIPT

- Lobe power cycles to 66 MW, where a lobe power cycle consists of a reactor startup and a reactor scram (unscheduled reactor scram and recoveries will be counted as a normal startup/shutdown cycle). The analysis assumed one thousand five hundred twelve of these types of cycles.
- Lobe power upset to 72.6 MW (1.1 times 66 MW). The analysis assumed five hundred four of these type cycles.
- Pressure cycles, where a pressure cycle occurs when loop pressure is cycled, with the reactor shut down, from less than 800 psig to normal operation pressure and back to less than 800 psig. The analysis assumed two thousand one hundred of these types of cycles.
- Maximum cooling transient, where a maximum cooling transient occurs when there is a rapid loop cooldown from 600°F to 110°F within two minutes. The analysis assumed one hundred twelve of these types of cycles.

AHTL IPT

- Lobe power cycles to 40 MW (for operation at AHTL conditions). The analysis assumed two hundred and forty of these types of cycles.
- Lobe power upset to 44 MW (1.1 times 40 MW). The analysis assumed seventy-six of these types of cycles.
- Lobe power cycles to 50 MW (for operation at standard conditions). The analysis assumed forty-eight of these types of cycles.
- Lobe power upset to 55 MW (1.1 times 50 MW). The analysis assumed twenty of these types of cycles.
- Emergency Maximum Cooling, where emergency maximum cooling occurs when there is a rapid increase of loop flow to 80 gpm with a decrease in IPT inlet temperature from maximum to 200°F in 17 minutes with the reactor at normal operating power. The analysis assumed two of these types of cycles.

LIPT

- Lobe power cycles to 34 MW. The analysis assumed nine hundred eighty of these types of cycles.
- Lobe power upset to 37.4 MW (1.1 times 34 MW). The analysis assumed one hundred sixty three of these types of cycles.
- Loop heatup and cooldown, where loop heatup and cooldown occur when the loop is heated to 600°F with a subsequent cooldown with the reactor at zero power. The analysis assumed three hundred fifty of these types of cycles.

- Maximum cooling transient, where a maximum cooling transient occurs when there is a rapid loop cooldown from 600°F to 110°F in two minutes. The analyses assumed three of this type of cycle.
- Depressurization at 30 MW, where depressurization at 30 MW occurs when the gas annulus depressurizes with the loop pressurized, and with the reactor at normal operating power. The analysis assumed one of this type of cycle.

10.2.1.4.3 IPT Closure Assembly Testing and Inspection—IPT closure assembly parts are given routine examinations in accordance with the requirements of the *ATR Inservice Inspection Plan* (INEEL 2002). The examinations are conducted in accordance with detailed procedures that cover the installation of experiments, and in conjunction with leak tests that are part of the startup checklist for each reactor cycle. Additionally, formal inservice inspection of the closure assembly is not required since these components are replaced within the 10-year inspection interval. Initial baseline volumetric inspections are performed on these components at the time of fabrication.

10.2.1.4.4 IPT Vessel Wall Flange, Top and Bottom Head Closure Seal Testing and Inspection—Routine closure seal inspections are performed in conjunction with the reactor vessel leak rate tests as addressed in Chapter 5 (Reactor Coolant System).

10.2.1.4.5 IPT Experiment and Hanger Rod Testing and Inspection—The lugs on the specimen holders are inspected prior to assembly of the experiment. Prior to reactor full power operations, each PWL facility is operated at normal operating flow for a minimum of four hours and at startup temperature for at least two hours to observe loop and experiment parameters for any indication of flow blockage.

10.2.2 Out-of-Pile Loop Facilities

The equipment necessary to control the environment of the PWL experiments (e.g., pumps, heaters, heat exchangers, flow and temperature control valves, etc.) is located in shielded cubicles on the first and second basement floors of the reactor building. These cubicles have alphanumeric identifiers that denote the basement floor location and radial orientation relative to the reactor shielding structure. For example, in the 2A cubicle designation, the numerical character identifies the cubicle as being located on the second basement floor. The alpha character designates the basement orientation A through E, running clockwise from the east side of the second basement floor to the west side.

The cubicle designations are also coupled to one of the nine flux trap locations to fully identify the PWL facility. For example, 2B-SE designates the coupling between the 2B out-of-pile cubicle equipment, and SE designates the IPT in the southeast flux trap. The current IPT-cubicle couplings are 1C-W (AHTL), 1D-N (SIPT), 2B-SE (SIPT), 2D-SW (SIPT), and 2E-NW (LIPT). Figure 10.2-11 is a plan view of the arrangement of the cubicles in the reactor building second basement.

This section discusses (a) the design bases; (b) piping and component descriptions; (c) evaluations; and (d) testing and inspection requirements for the OPL components and systems. Generally, these items include out-of-pile piping, components, and systems that are subject to loop pressure.

Three basic OPL designs currently support the three IPT designs. The original OPL design was associated with the SIPT and dates from the initial construction of the ATR (loops 1D-N, 2B-SE, and 2D-SW). The second OPL design supports operation of a LIPT (loop 2E-NW). The third OPL design supports operation of the AHTL IPT (loop 1C-W).

Primary and secondary cubicles 1A, 2A, and 2C contain equipment that was previously used to support IPT removed during the 1994 core internals change out. This equipment and associated motor control centers have been removed from service.

10.2.2.1 Out-of-Pile Loop Design Bases. The following subsections discuss the design bases of the OPL. For the purposes of this document, the original standard OPL (SOPL) is used as the reference design in the descriptions of the design bases, system and component descriptions, safety evaluations, and inspection and testing. Where appropriate, the differences between the SOPL, the AHTL, OPL, and the LIPT OPL are described or identified by reference to supporting detailed design specifications describing unique characteristics rather than repeating the discussions of loop features that are identical for SOPL, AHTL OPL and LIPT OPL designs.

10.2.2.1.1 Loop Equipment, Valves, and Piping Design Bases—The out-of-pile equipment is a significant source of energy when operated at temperature and pressure. Loss of integrity of the piping, valves, and equipment could potentially result in a blowdown of the loop, followed by potential release of fission products, and a positive reactivity effect because of voiding of the pressure tube. Therefore, the OPL piping and equipment are designed in accordance with the requirements discussed below. Except for the items detailed in the following subsections, the design basis for all loop piping, valves, and system components subject to loop coolant pressure is to minimize the risk associated with the potential release of energy and fission products during operation of the system at elevated pressure and temperature.

The PWL piping systems were built to applicable codes at the time of construction. For the five loops these are:

Loop 1C-W	ASME Boiler and Pressure Vessel Code Section III Class 1 1978 Edition (ASME 1978)
Loop 1D-N	ANSI Power Piping Code B31.1-1955 Edition (ASME 1955)
Loop 2B-SE	ANSI Power Piping Code B31.1-1955 Edition (ASME 1955)
Loop 2D-SW	ANSI Power Piping Code B31.1-1955 Edition (ASME 1955)
Loop 2E-NW	ANSI Power Piping Code B31.1-1955 Edition (ASME 1955)

The design flow, temperature, and pressure for each loop facility is given below;

Loop 1C-W	80 gpm, 710°F, and 3800 psig (EG&G Idaho 1988a)
Loop 1D-N	80 gpm, 650°F, and 2500 psig (Bettis 1975)
Loop 2B-SE	80 gpm, 650°F, and 2500 psig (Bettis 1975)
Loop 2D-SW	80 gpm, 650°F, and 2500 psig (Bettis 1975)
Loop 2E-NW	350 gpm, 650°F, and 2500 psig (INEEL 2003; Hendrickson 1995)

Repairs, replacements, or modifications to the loops are controlled by the rules and regulations established in the *ATR Inservice Inspection Plan* (INEEL 2002).

10.2.2.1.2 Loop Pressure Relief Systems Design Basis—The loop is designed with pressure relief systems off the pressurizer and primary loop piping downstream of the loop heaters. The design basis for these systems is to prevent the primary loop piping and components pressures from exceeding values allowed by the design codes and thus from over-pressurizing sufficiently to breach the loop pressure boundary, and release pressure and fission products.

10.2.2.1.3 Loop Shielding Design Basis—The design basis for the loop shielding is to minimize personnel exposure from N-16, and from activation and fission products circulating in the loop coolant as a result of an intentional or inadvertent failure of an experiment. Specifically, the cubicle walls are designed to perform the following:

- Decrease radiation from N-16 in the PWL with the reactor at full power to 2.5 mrem/hr[a] at the outer surface of the cubicle wall
- Restrict the integrated dose from fission products during the first hour following a test failure to 12.5 mrem[a] at the outer surface of the cubicle wall
- Restrict the dose rate inside the cubicle (with the loop shutdown) to 2.5 mrem/hr[a] from an adjacent operating cubicle and to a 1.0 mrem/hr[a] design level on the reactor floor.

10.2.2.2 Out-of-Pile Loop Description. The following subsections contain a brief description of the OPL.

10.2.2.2.1 Loop Equipment, Valves, and Piping Description—The loop systems and components are designed and analyzed for fabrication from 300 stainless steel or Inconel. For the SOPL and the AHTL OPL, the out-of-pile piping interconnection with the inlet and outlet branch piping from the IPT exits the sub-pile room through a shielded trench, then passes around the reactor biological shielding through a piping corridor. For the LIPT OPL, the inlet branch piping from the IPT exits the sub-pile room through a shielded trench, then passes around the reactor biological shielding through a piping corridor to the rear wall of the cubicle and the outlet branch piping from the IPT exits the nozzle trench room in a piping corridor to the rear wall of the cubicle. From the piping corridor, the pipe enters the corresponding shielded cubicle that contains the out-of-pile equipment, through an opening in the rear wall of the cubicle.

The loop primary cubicle contains over 500 ft^2 of floor space with an additional 300 ft^2 of floor space allocated to an adjacent secondary cubicle, as shown in plan view in Figure 10.2-12. The primary cubicle contains the experiment loop primary heat exchangers, loop primary circulation pumps, pressurizer, primary loop heaters, purification cooler, regenerative heat exchanger, purification ion exchange columns, pressurizer intercooler, and associated piping and valves. Secondary cubicles house equipment needed to maintain loop-coolant chemistry within the sponsors' specifications. The secondary cubicle shown in Figure 10.2-12 contains the loop instrumentation transmitter panel and sample cabinets used to sample the loop coolant at various sample tap locations and to inject additives.

---

[a] These are expected average numbers. There may be some locations with higher dose rates. The walls are routinely monitored for any hot spots, and proper precautions taken if any are found.

Equipment in the cubicle is arranged such that any major component can be installed or removed without removing adjacent equipment. Each cubicle has an overhead monorail for handling loop primary pumps and other heavy equipment. The walls of the cubicle are constructed of 32-in.-thick, high-density concrete block to reduce radiation levels outside the cubicles to acceptable levels. Each cubicle is ventilated through an individually controlled supplementary exhaust system.

Most manually operated valves, such as isolation valves, loop drain valves, etc., are located such that they can be operated from outside the cubicle walls by using extension handles. A sample box is located in the secondary cubicle adjacent to each primary cubicle where sampling connections from various points in the loop are provided.

Generally, the electrical switchgear and auxiliary-equipment areas are located on the same floor, but outside the respective cubicles.

Figure 10.2-13 is a flow diagram of the typical SOPL loop. In the SIPT (and AHTL IPT) "bottom reentrant" configuration, primary loop coolant enters and leaves the IPT via the shielded trench in the sub-pile room floor. From the sub-pile room, the inlet and outlet lines rise to an elevation about 15 ft above the elevation of the top of the core. They reverse direction in an inverted "U" bend in the pipe corridor between the reactor biological shielding and the inner cubicle wall, then enter the primary cubicle. In the LIPT configuration, primary loop coolant enters the IPT via the shielded trench in the sub-pile room floor and primary loop coolant exits the IPT via shielded piping in the nozzle trench. The inlet piping for the LIPT is configured as the inlet piping for a SIPT complete with the inverted "U" bend.

Each of the piping "U" bends and the LIPT outlet piping is fitted with high point vent valves. Typically during reactor shutdowns, these valves are opened when the loop is depressurized to provide syphon breakers that prevent draining of the IPT in the event of a leak in the out-of-pile piping or components. For the standard OPLs, after entering the cubicle, the coolant from the IPT flows through a flow control valve, then to a pneumatically actuated three-way valve that proportions flow through and around a heat exchanger to maintain a constant inlet temperature to the IPT. From the primary loop heat exchangers, coolant flows to the suction of the primary loop pumps, through an enlarged piping section equipped with "clam shell" type clamp-on heaters, and back to the IPT. The pressurizer is connected to the loop piping at the suction of the primary loop pumps. The LIPT and AHTL OPLs general piping designs differ from the SOPL. For the LIPT and AHTL OPL the flow control valve is located after the temperature control valve, whereas for the SOPL, the flow control valve is located prior to the temperature control valve. For the LIPT and AHTL OPL, primary loop piping is generally 3-in. versus 2-in. for the SOPL. The AHTL and the LIPT loops have increased heater capacity of 324 kW versus 216 kW for the SOPL. The LIPT has eight pumps in two parallel banks with four pumps per bank, and the AHTL has six pumps in series, whereas the SOPL has three pumps in series.

The detailed system design descriptions for the SOPL and LIPT OPL equipment (including service limits, system limitations, setpoints, casualty events, recovery procedures, and maintenance requirements) are provided in Ebasco (1963) and EG&G Idaho (1980b).

In addition to higher design service limits, as discussed in the following sections, the AHTL OPL configuration differs from the SOPL configuration in that the AHTL OPL includes three additional primary loop pumps and two additional banks of heaters, which are shown in Figure 10.2-14. In addition, the AHTL is provided with a set of crossover piping assemblies with flange connections. This feature enables the reversal of the flow direction over the experiment as shown in Figure 10.2-15.

EG&G Idaho (1980a) provides the detailed system design descriptions and specifications for the AHTL OPL equipment. This reference includes service limits, system limitations, setpoints, casualty events, recovery procedures, and maintenance requirements.

10.2.2.2.2 Loop Pressure Relief System Description—The loop components and piping are protected against over pressurization by the use of relief valves located on the loop primary piping and on the pressurizer. These devices prevent the piping and the IPT pressure from exceeding design pressure by more than 10%. Relief valves also protect the shell side of the primary loop heat exchanger, shell side of the purification cooler, and HDW inlet header to the primary loop pump cooling coils against over pressure.

10.2.2.2.3 Loop Shielding Description—The loop cubicle walls are used as biological shielding to reduce radiation levels in normally occupied areas during operations. The loop cubicle walls are constructed of magnetite concrete blocks and are 2 ft 8 in. thick; the floors consist of 4 ft 6 in. of ordinary concrete. The cubicle ceilings in the first basement are made of ordinary concrete, 5 ft thick.

10.2.2.3 Out-of-Pile Loop Evaluations. Since fabrication and operation of the original OPL components and systems, a number of additional evaluations and analyses have been performed. These additional evaluations were done to be consistent with the evolution of more rigorous safety- evaluation criteria and to expand the original design and service limits for operating facilities in response to the changing requirements of the irradiation program sponsors.

The following subsections identify the specific individual evaluations supporting the current operation of the loop systems and components (including system and components service limits, system limitations, setpoints, casualty events, and recovery procedures).

10.2.2.3.1 Loop Equipment, Valves, and Piping Evaluation—The specific evaluations of the loop equipment, valves, and piping are identified below with their supporting references. Loop failure initiated reactivity events are addressed in Chapter 15 (Accident Analyses). Sudden catastrophic failure or rupture of loop piping caused by a seismic event is beyond design basis (Hendrickson 1997b). Complete circumferential rupture of loop piping in the subpile room and in the nozzle trench is shown to be beyond design basis using leak-before-break analysis (Atkinson 1998).

- System design descriptions and specifications (SOPL - Ebasco 1963; AHTL - EG&G Idaho 1988b; LIPT loop - INEEL 2003).
- Loop piping design specification (SOPL - Bettis 1975; AHTL - EG&G Idaho 1980a; LIPT loop - EG&G Idaho, 1980b).
- Thermal and stress analyses for loop piping (1C-W - Morton 1997a, 1D-N - Morton 1997b, 2B-SE - Morton 1997c, 2D-SW - Morton 1997d, 2E-NW - Morton 1997e).
- Over pressure protection and relief valve analyses report for loop piping (SOPL - Pace 1993a; AHTL - Pace 1987; LIPT loop - Pace 1993b).
- Probabilistic risk assessment of loop piping/component failures (Hendrickson 1997c).
- Small loop tubing pipe whip evaluation (Snow 1998a).

- Evaluation of experiment loop pipe impact loadings on the ATR primary coolant system (Snow 1998b).
- Loop subpile room, subpile room pipe corridor, and nozzle trench piping leak-before-break analysis (Atkinson 1998).

The IPT are located in flux traps which have positive temperature and void coefficients. The combination of the positive coefficients and the high temperature and pressure operating conditions in the PWL results in the potential for significant reactivity insertions from off-normal conditions in the PWL. Therefore, the IPT and OPL equipment are designed, fabricated, and operated in accordance with the requirements discussed in Sections 10.2.1.1.1 and 10.2.2.1.1, respectively. The PWL designs are well established and do not change significantly relative to the considerations for reactor safety. Therefore, it is possible to establish accident sequences and initial conditions that envelop most combinations of PWL and experiment operating conditions. These accident sequences, initiated in the PWL, have been evaluated in Chapter 15 (Accident Analyses). The specific accident sequences are listed in Chapter 15. The significant considerations from the analyses in Chapter 15 are:

- limiting the potential reactivity insertions from depressurizations and voiding in the IPT and from failure of the experiment hardware to the values assumed in the accident analyses
- maintaining PWL operating conditions within limits that preserve the depressurization rates developed in the accident analyses
- maintaining the PWL operating conditions within the design analyses to maintain the failure probabilities assumed in the accident analyses
- maintaining the PWL hardware and control system protective features used in the accident analyses to develop accident sequence probabilities.

In addition, specific OPL accident sequences have been evaluated to assess the consequences of the events and to demonstrate the acceptability to the worker and public risk associated with the operation of the experiment facilities. The consequences to the reactor of PWL accident sequences have been evaluated for the public risk probabilistically and mechanistically in the ATR Level II PRA (Thatcher et al. 1994) and Chapter 15 (Accident Analyses).

The formal analyses of the operation of a specific SOPL, AHTL, or LIPT, with a specific experiment loading and the objective evidence that such operation in a given flux trap falls within the envelope of the defined parameters and service limits, is documented in the CSAP and the Loop ESA for each reactor cycle. Together, the preceding evaluations and analyses constitute the current basis for the operation of the SOPL, AHTL, and LIPT.

10.2.2.3.2 Loop Pressure Relief Systems Evaluation—Specific evaluations are detailed in Pace (1993a) for the SOPL, Pace (1993b) for the LIPT loop, and in Pace (1987) for the AHTL. The loop pressure relief systems are tested per the *ATR Inservice Inspection Plan* (INEEL 2002) discussed in Section 10.2.2.4.2.

10.2.2.3.3 Loop Shielding Evaluation—Specific evaluations are not performed on the loop shielding beyond the original analyses that were done to estimate personnel exposure that could result if a failed experiment were to release fission products into the loop's coolant (Ebasco 1963). The effectiveness of the PWL shielding is demonstrated by routine radiological surveys from 30 years of facility operation.

10.2.2.4 Loop Testing and Inspection Requirements. The following subsections discuss the testing and inspection requirements of the OPL.

10.2.2.4.1 Loop Equipment, Valves, and Piping Testing and Inspection Requirements—Routine testing and inspection requirements for all loop piping and components are conducted in accordance with the *ATR Inservice Inspection Plan* (INEEL 2002) and the preventative maintenance programs developed in accordance with the equipment manufacturer's recommendations. The ATR Inservice Inspection Program was developed and is conducted in accordance with Section XI of the ASME Boiler and Pressure Vessel Code (ASME 1989) on all loop components and on all piping greater than 1/2 in. Because the loops are basically closed, welded systems, the inservice inspection of loop piping and components is conducted primarily by hydrostatic testing. A detailed description of the *ATR Inservice Inspection Plan* (INEEL 2002) is provided in Chapter 14 (Initial Test Program, Inservice Surveillance and Maintenance). To support the leak-before-break analysis of the loop subpile room piping (Atkinson 1998), the following limits are placed on loop pressurizer leak rates;

- If the pressurizer leak rate exceeds 13%/hour, the reactor is immediately shutdown.
- If the leak rate exceeds 5%/hour, during the next available reactor outage with the loop pressurized but cooled down, positive identification of the sources of the leakage will be determined including visual inspection of loop piping including the piping in the subpile room, the subpile room corridor, and in the nozzle trench.

10.2.2.4.2 Loop Pressure Relief System Testing and Inspection Requirements—Testing and inspection of the loop pressure relief systems is conducted in accordance with the *ATR Inservice Inspection Plan* (INEEL 2002) as discussed in Chapter 14 (Initial Test Program, Inservice Surveillance and Maintenance).

10.2.2.4.3 Loop Shielding Testing and Inspection Requirements—Area radiation monitoring equipment is located both inside and outside the loop cubicles. Other than routine surveillance and radiological monitoring of this equipment, routine tests or inspections are not conducted on the loop shielding.

10.2.3 Auxiliary Support Systems and Utilities

This section provides a discussion of the following for a representative cubicle: (a) the design function, (b) component descriptions, (c) evaluations, and (d) testing and inspection requirements for auxiliary support systems and utilities. Generally, these systems provide secondary cooling, power, ventilation, PWL water makeup and chemistry control and PWL monitoring functions in support of loop operation. This section covers the following systems:

- IPT annulus helium system
- IPT annulus moisture detection system
- Radiation monitoring system
- Water systems
- Air systems
- Ventilation and cooling system

- Electrical system
- Vent and drain system.

10.2.3.1 Standard Auxiliary Support System and Utilities Design Functions. This section describes the design functions of the PWL auxiliary support systems and utilities in terms of the functional design bases and the applicable supporting design specifications.

10.2.3.1.1 IPT Annulus Helium System Design Functions—The design functions of the IPT annulus helium system are (a) to provide insulation between the pressure tube and envelope tube to reduce heat losses to the reactor primary coolant, (b) to provide a medium suitable for detecting a leak of reactor coolant or loop primary coolant into the annular space between the pressure tube and envelope tube, and (c) to provide an external pressure on the IPT pressure tube as required by design stress requirements for operation of the AHTL IPT and LIPT. To prevent increasing the probability of an envelope tube rupture with gas annulus over pressure, any modifications of the IPT annulus helium system must comply with the Event Probability Analyses For An In-Pile Tube Gas Envelope Tube Rupture with Gas Annulus Overpressure (Atkinson 1994).

10.2.3.1.2 IPT Annulus Moisture Detection System Design Function—The design function of the IPT annulus moisture detection system is to provide a means for monitoring the moisture in the helium flow stream from the envelope-tube/pressure-tube annulus so that a leak from either the pressure tube or envelope tube may be detected.

10.2.3.1.3 Radiation Monitoring System Design Function—The design function of the PWL radiation monitoring system is to provide means for detecting activation and fission products in the loop coolant, and for determining radiation levels in the coolant. To do so, the loops are equipped with Radiation Area Monitors (RAMs) near the loop coolant piping at the outlet of the IPT (inside the primary cubicle) and purification inlet.

10.2.3.1.4 Utility Water Systems Design Function—The PWLs use four utility water systems: the ATR well water system, the ATR LDW system, the loop makeup systems, and the ATR HDW system. The design function of each of these systems is as follows:

- The well water system provides well water for the cooling coils at the cubicle space coolers and provides secondary cooling for the 1C-W HDW cooling water heat exchangers.
- The LDW system provides demineralized water from the ATR LDW system for the loop resin addition tank, the decontamination solution tanks in the decontamination system, the loop sample box, loop sample coolers (except for the AHTL), and the loop makeup systems.
- The HDW system supplies the secondary side of the loop heat exchangers, the loop purification intercooler, the bearing and stator cooling inlets on the primary loop circulation pumps, and the AHTL HDW system.
- The two loop makeup systems supply deoxygenated-demineralized water to the loop makeup pumps for the normal water supply to the loops.

10.2.3.1.5 Ventilation and Cooling Systems Design Function—The design function of the PWL ventilation systems is to provide a supplementary air exhaust flow capable of maintaining the PWL primary and secondary cubicles at a negative pressure with respect to the surrounding operating corridors. The purpose for maintaining negative pressure is to prevent the possible release of contaminants from the cubicles.

The design basis for the experiment cubicle cooling unit is to remove heat in excess of that removed by the cubicle exhaust system. Programmatic specifications limit cubicle temperatures to protect instrumentation. There are no reactor safety analysis requirements on the loop cubicle temperatures.

10.2.3.1.6 Electrical Power System Design Function—Electrical power for the PWL is from the ATR power distribution system. The design function for PWL facility electrical power is to provide commercial, diesel, and commercial-diesel power at the appropriate voltages to the experimenters' power panels to provide power to loop electrical equipment, control panels, and instrumentation.

10.2.3.1.7 Vent and Drain Systems Design Function—The design function of the PWL vent and drain systems is to provide for the controlled discharge of (a) air and gas to the ATR stack, or (b) liquids from the loop to a system of collection tanks (through either the warm or hot drain systems depending on the concentration of radioactive contaminants or conductivity of the liquid).

10.2.3.2 Auxiliary Support System and Utilities System Description. Following the initial design, construction, and operation of the PWL facilities, design modifications have been completed to upgrade or enhance the original design of the auxiliary support and utility systems in response to the experiment sponsors' requirements.

Following is a summary of the individual auxiliary support and utility systems for the PWLs. The detailed design descriptions, design specifications, and code and standards for the individual PWL systems are provided in EG&G Idaho (1988a), INEEL (1999, 2003), and Ebasco (1963).

10.2.3.2.1 IPT Annulus Helium System Description—Figure 10.2-16 is a flow diagram of a typical PWL IPT annulus helium system. The number of helium bottles, the gas manifold, tubing and valves, the specific alarm functions, and other pertinent design information for the individual PWLs are given in the references noted in the previous section.

The IPT annulus helium system has three functions: (a) temperature insulation to reduce heat losses to the reactor primary coolant, (b) a medium suitable for detecting a leak of reactor coolant or loop primary coolant into the annular space between the pressure tube and envelope tube, and (c) an external pressure on the IPT pressure tube as required by design stress requirements for operation of the AHTL IPT and the LIPT. Separate moisture detection equipment is connected to each of the IPT gas annuli. The moisture detection equipment draws a sample flow from the basically static annulus helium system.

The SIPT IPT annulus helium system has a design pressure of 390 psig at 240°F and a normal operating pressure of 20 psig. The IPT annulus helium system associated with the AHTL IPT has a design pressure of 743 psig at 120°F and a normal operating pressure of 590 psig. The IPT annulus helium system associated with the LIPT has a design pressure of 450 psig at 240°F and a normal operating pressure of 390 psig.

For any IPT, in case of a leak in the inpile pressure tube, the relief valve will open, the loop coolant will exhaust to the hot waste storage tank. For a SIPT, in case of a leak in the envelope tube, the relief valve will open, the reactor coolant will exhaust to the hot waste storage tank. As the AHTL IPT and the LIPT operating pressure of the helium systems are above the nominal pressure of the reactor primary system, a leak in the envelope tube will leak helium gas into the reactor vessel. Gas leakage in the reactor core is discussed in Chapter 15 (Accident Analyses).

For the AHTL, IPT inlet pressure minus IPT annulus helium pressure is used to determine the pressure tube delta pressure. As discussed in Section 10.2.4.1.6, the LOCS will initiate a reactor scram and shut off all but one loop primary pump upon an excessively high pressure tube delta pressure.

10.2.3.2.2 IPT Annulus Moisture Detection System Description—The IPT annulus moisture detection system is located in the out-of-pile secondary cubicle. ME-1 in Figure 10.2-16 contains the moisture element, a sample rotameter to measure flow, a pressure regulator, and a bypass line with a rotameter. The outlet tube is connected to the vent collection piping in the cubicle. The moisture analyzer is connected to, and draws a helium sample flow from, the annulus between the pressure tube and the envelope tube.

10.2.3.2.3 Radiation Monitoring System Description—Typically there are two RAMs in each cubicle, one on the outlet piping (inside the primary cubicle) and one on the purification inlet piping. Each monitor has, as a minimum, a high radiation level alarm/setpoint adjustable over the entire detector range, and a circuit failure alarm. The operator is able to set the actual setpoint for each channel from the control system. The cubicle space RAM setpoint which alarms in the primary cubicle for the AHTL and in the secondary cubicle for all other loops is adjusted at the remote ratemeter module. In all cases, the radiation history is available on the LOCS.

The radiation detectors do not perform a control function, but their readings are monitored parameters by the control system.

In addition, the out-of-pile cubicle wall is provided with a port that is closed by a removable plug. The plug can be removed to insert a radiation detector for area monitoring to determine radiation levels in the cubicle before entry of personnel.

10.2.3.2.4 Makeup and Utility Water Supply Systems Description—The well water supply and return headers run through the reactor building first and second basements. From the inlet header, individual lines supply each of the OPL cubicles. Valves outside the loop cubicles are used to provide well water to the cooling coils of the cubicle space cooler and to the AHTL HDW cooling water heat exchangers.

Demineralized water from the ATR LDW system (as described in Chapter 9, Auxiliary Systems) is used in the loop resin addition tank for the purification system, sample coolers, the sample box, and the loop makeup systems. LDW is supplied to these systems from the 2-in. LDW headers that run through the reactor first and second basements.

The HDW system is a closed loop with its own pumps, heat exchanger, and other auxiliaries. The HDW system supplies 100°F water and 130°F water. The 100°F HDW is used on the shell side of the purification cooler and the primary loop circulation pump motor stator jackets. The 130°F HDW is used on the shell side of each loop heat exchanger. The AHTL has a separate HDW system to provide cooler water to the primary loop pumps, sample coolers, and the purification cooler. This system consists of four heat exchangers and two recirculation pumps and is supplied by the main HDW system.

The loop makeup system consists of two separate systems that utilize similar components; deoxygenators, mixed bed demineralizers, resin charge tanks, a makeup water storage tank, and recirculation pumps. One makeup system supplies loops 1C-W and 1D-N and the other system supplies loops 2B-SE, 2D-SW, and 2E-NW.

10.2.3.2.5 Ventilation and Cooling Systems Description—Ventilation is provided for the primary and secondary cubicles through an individually controlled supplementary exhaust system that draws air from the basement area, which is supplied with fresh air by the main reactor building ventilation supply system. The air is drawn from the secondary cubicle into the primary cubicle under negative pressure. Typically, the primary cubicle has 1,000 cfm of air exhausted to a duct work system, which is connected to the main exhaust system and carried out to the ATR stack. The ATR ventilation system is described in Chapter 9 (Auxiliary Systems).

Because the cubicle exhaust systems cannot absorb all of the heat given off by the various cubicle components and piping, the primary cubicle is also equipped with a recirculation-type air-handling and cooling unit. This unit consists of a fan and a cooling section bolted together to form an integral unit. The water-cooled, serpentine, finned coils have a continuous circuit from the inlet to outlet and require 30 gpm of well water to maintain the cubicle air temperature at 95°F.

10.2.3.2.6 Electrical Power System Description—The ATR electrical power system is designed to provide multiple electrical power sources to the PWL equipment. The power sources include commercial power, diesel power, and automatically switched diesel or commercial power. The ATR electrical power system is described in Chapter 8 (Electric Power).

Typically, the PWL are provided with the following power distribution and control equipment:

- 480 V commercial and 480 V diesel motor control center
- 120 Vac Power distribution panels
- Uninterruptible power supply.

Since the initial design and construction of the PWL electrical power systems, a number of modifications have been made to enhance the system design or to respond to specific experimenters' requirements. The specific design descriptions, specifications, design codes, and requirements for the individual loops are contained in EG&G Idaho (1988a), INEEL (1999, 2003), and Ebasco (1963).

10.2.3.2.7 Vent and Drain Systems Description—Both inpile and out-of-pile equipment is designed to facilitate the venting of air and gases and the draining of water. Vents and drains are double-valved, and vent or drain valves that are inaccessible are normally provided with reach rods that have their handwheel in accessible areas.

The venting and draining system consists of (a) the cubicle vent collection system and (b) the PWL draining and vent system. These systems are described in Chapter 9 (Auxiliary Systems).

The cubicle vent collection system consists of a header that leads to a vent header common to all cubicles, which in turn directs gases to the vent gas duct and then to the ATR stack.

The PWL draining and vent system has a drain-collection header and a vent collection trough. The drain-collection header can be directed to the warm waste tank or the hot waste tank. The drain collection header has a relief valve with the outlet connecting to the cubicle vent collection system. The vent collection trough is in the secondary cubicle. The vent collection trough is provided with a plexiglass cover for observing flow. The vent collection trough is valved for drainage to either the hot waste tank or the warm waste tank as required. There are vents that are located at the high points of the primary loop coolant piping which, when open, act as syphon breakers. They are separated from the other PWL vents and consist of a plexiglass flow box on the reactor main floor to observe flow. These high point vents are routed to the hot waste tank by tubing with double block valves.

10.2.3.3 Auxiliary System and Utility Evaluations. The PWL auxiliary and utility system evaluations mainly consist of those evaluations performed (a) in conjunction with the initial equipment design, and (b) in subsequent upgrades of the design and safety documentation for the reactor and experiment systems. These evaluations consider specific casualty events associated with the malfunction of the analyzed systems and utilities. They also provide the bases for loop alarms and functional corrective actions of loop equipment and, where appropriate, reactor power reductions through the LOCS.

Mitigative actions from the auxiliary systems, discussed in Section 10.2.4, may result in reactor power reductions. The actions are designed to protect the loop equipment and programmatic investment of the experimenter.

10.2.3.3.1 IPT Annulus Helium System Evaluations—The IPT annulus helium system insulates the IPT pressure tube from the reactor coolant to control the experiment environment in accordance with the requirements of the experiment sponsor. In addition, the system provides a means for (a) a medium suitable for detecting a leak of reactor coolant or loop primary coolant into the annular space between the pressure tube and envelope tube and (b) an external pressure on the IPT pressure tube as required by design stress requirements for operation of the AHTL IPT and the LIPT. Although the design analyses indicates that the consequences associated with the loss of integrity of either vessel will not lead to the failure of the second vessel, the IPT annulus helium system is designed to alarm on both high and low annulus gas pressure.

10.2.3.3.2 IPT Annulus Moisture Detection System Evaluations—The IPT annulus moisture detection system also provides a means for detecting a breach in either of the two IPT vessels by the presence of moisture in the annulus gas. As with the IPT annulus helium system, the moisture detection system is alarmed on high moisture in the helium gas medium, allowing the operator to take corrective action if the reactor has not been scrammed from low pressure in the loop primary system. As the AHTL IPT and the LIPT operating pressure of the IPT annulus helium systems are above the nominal pressure of the reactor primary system, a leak in the envelope tube will leak helium gas into the reactor vessel.

10.2.3.3.3 Radiation Monitoring System Evaluations—Operation of the loop radiation monitoring system and the system alarm setpoints are based on predictions of the loop coolant radiation levels associated with a specific experiment. In some cases, the experiment involves irradiation of fuel samples with intentional defects, the radiation monitoring system is used to monitor for fission breaks in the loops as a fission break is capable of producing high radiation fields outside the loop cubicle and the existence of fission products in loop coolant makes loop cubicle contamination and/or ATR stack releases more probable. Suitable manual sampling shall be performed to determine gross activity in the loop coolant, whenever the loop radiation monitoring system is inoperable.

10.2.3.3.4 Makeup and Utility Water Supply Systems Evaluations—Specific evaluations are not performed on the makeup and utility water supply systems beyond those associated with the original design analyses, which includes consideration of reduction or loss of flow from either a breach of the system or loss of power to the pump or system control valves. The PWL HDW flows and temperatures are monitored and will alarm on the LOCS on loss of pressure or flow. As appropriate, reactor power reductions from loop control circuitry will occur because of low loop flow (from a loop primary pump trip due to loss of pump coolant flow) or high loop temperatures (from loss of coolant flow to the loop primary heat exchanger).

10.2.3.3.5 Ventilation and Cooling Systems Evaluations—Casualty events associated with the loss of cubicle exhaust fans or cooling water can result in (a) an alarm at the LOCS and appropriate corrective action by the loop operator, or (b) a reactor power reduction if loop coolant exceeds the approved setpoints for the reactor cycle.

10.2.3.3.6 Electrical Power System Evaluations—Evaluations associated with casualty events involving the electrical power system consider the loss of both commercial and diesel power. Loop primary flow is provided by operating at least two loop primary pumps; one being supplied by commercial power and the other pump being supplied by diesel power. If commercial power fails, the reactor will be scrammed by the low loop flow, but the pump in the loop connected to diesel-electric power will continue operating. Similarly, upon loss of diesel power, the reactor will be scrammed by the low loop flow, but the pumps in the loop connected to commercial electric power will continue operating.

10.2.3.3.7 Vent and Drain Systems Evaluations—Specific evaluations are not associated with the vent and drain system beyond (a) those evaluations performed in conjunction with the original design, and (b) establishment of criteria associated with the fluid activity levels that dictate to which of the two drain systems (warm or hot waste) the fluids are discharged.

10.2.3.4 Testing and Inspection Requirements. This section describes the periodic testing and inspection performed as necessary to ensure reliable operation and acceptable performance of PWL auxiliary and utility systems.

10.2.3.4.1 IPT Annulus Helium System Testing and Inspection—The IPT annulus helium system is monitored during operation and the equipment is included in the loop preventative maintenance program. The system relief valves are tested in conjunction with the loop preventative maintenance program.

10.2.3.4.2 IPT Annulus Moisture Detection System Testing and Inspection—The IPT annulus moisture detection system is monitored during operation and the equipment is included in the loop preventative maintenance program. As the AHTL IPT and the LIPT operating pressure of the IPT annulus helium systems are above the nominal pressure of the reactor primary system, gas leakage from the AHTL IPT and LIPT into the reactor vessel is routinely checked during periods when the reactor vessel is open. In addition, the pressure in the IPT annulus helium annuli for the AHTL IPT and LIPT is lowered periodically when the reactor primary system is at nominal pressure and the moisture detection system are checked to confirm there is no leaks in the envelope tube.

10.2.3.4.3 Radiation Monitoring System Testing and Inspection—The Radiation Monitoring System is checked during operation, the low alarms and high alarms are periodically checked, and the IPT outlet radiation detectors are monitored during reactor startup to verify instrument response.

10.2.3.4.4 Makeup and Utility Water Supply Systems Testing and Inspection—These secondary water systems and components are included in the loop preventative maintenance program.

10.2.3.4.5 Ventilation and Cooling Systems Testing and Inspection—The cubicle air handling and cooling system components are monitored during operation and are included in the loop preventative maintenance program.

10.2.3.4.6 Electrical Power System Testing and Inspection—The electrical power system equipment is included in the loop preventative maintenance program.

10.2.3.4.7 Vent and Drain Systems Testing and Inspection—The venting and draining system components are exempt from examination in accordance with the *ATR Inservice Inspection Plan* (INEEL 2002).

10.2.4 Loop Operating and Control System

The following sections discuss (a) the design functions, (b) component and system descriptions, (c) evaluations, and (d) testing and inspection requirements for the LOCS. The major portion of the LOCS is a MAX 1000 Distributed Control System which consists of five remote processing units and eight computer workstations. Each of the five remote processing units is used to control the equipment for a specific loop facility. The eight workstations are used by operations and engineering personnel to control and monitor the system. The communication between the eight workstations and the remote processing units is through a dual directional fiber optic highway. The remote processing units contain input/output modules, two pairs of redundant Distributed Processing Units, two pairs of redundant power supplies, and two optical-to-electrical interface modules. The input modules interface with the loop equipment to convert field signals to digital signals (for example, converting a 4-20 mA signal to a digital signal). The output modules convert digital signals to interface with loop equipment (for example, stopping and starting equipment). The two pairs of redundant Distributed Processing Units, designated the A/B and C/D pair, interface with the input/output modules to operate the loop equipment at operator requested values. Two pair of Distributed Processing Units are necessary as a single Distributed Processing Unit cannot process all the information necessary to control a loop facility. One of the two pairs of redundant power supplies are used to provide power for the electric equipment in the remote processing unit, transmitters, and to the supply power to field electrical signals optical-to electrical interface units for communication over the fiber highway. The other pair of redundant power supplies are used to provide power to field electrical equipment. The LOCS is described in the System Design Description for the ATR Loop Operating Control System (INEEL 1999).

The purposes of the LOCS are (a) to monitor and control various experiment loop parameters to establish and maintain the environmental conditions specified by the experiment sponsor, and (b) to initiate mitigative actions. These actions include reactor power reductions as necessary to protect loop equipment and the investment of the experiment sponsor in the event of postulated off-normal conditions of sufficient magnitude to potentially damage loop equipment or result in the loss of experiment data. Selected LOCS protective functions have been used in the selection of the frequency of occurrence for the loop facility accident sequences analyzed in Chapter 15 (Accident Analyses).

Based on conclusions derived from the analyses, the LOCS is not considered to be engineered safety features nor safety-related equipment (Durney 1994; House 1992).

10.2.4.1 Design Function of the LOCS Control and Protective Functions. This section describes the design functions of the LOCS control and protective functions associated with the individual loop and experiment parameters. The LOCS protective functions provide protection for the experiment hardware, protection for the IPT, and are used in establishing the frequency of occurrence for various PWL fault conditions in Chapter 15 (Accident Analyses).

The protective functions input variables associated with each PWL for IPT protection and to establish the frequency of occurrence of accidents analyzed in Chapter 15 (Accident Analyses) are

- IPT inlet coolant temperature
- IPT inlet coolant flow
- IPT inlet coolant pressure
- IPT outlet coolant temperature
- MUCH experiment flow (MUCH experiments only)
- Pressure tube differential pressure (AHTL only - provides IPT protection only, not used in Chapter 15 [Accident Analyses]).

The specific design requirements, such as monitored variable, setpoint range, channel accuracy and response time, and number of channels, are included in INEEL (1999). The specific design functions for each of these protective functions are provided below.

10.2.4.1.1 LOCS IPT Inlet Temperature Protective Function Design Function—The design function of the IPT coolant inlet high-temperature protective function is to prevent over temperature of the IPT wall or the experiment by initiating a reactor scram upon reaching the IPT inlet temperature setpoint.

10.2.4.1.2 LOCS IPT Inlet Flow Protective Function Design Function—The design function of the IPT coolant inlet low flow protective function is to prevent over temperature of the IPT wall or the experiment by initiating a reactor scram upon reaching the low IPT inlet flow setpoint.

10.2.4.1.3 LOCS IPT Inlet Pressure Protective Function Design Function—The design function of the IPT coolant inlet low pressure protective function is to prevent over temperature of the IPT wall or the experiment. The over temperature is caused by the reduction in pressure leading to reduction in the capability to remove heat. Over temperature is prevented by initiating a reactor scram and cut-out of the loop line heaters upon reaching the low IPT inlet pressure setpoint.

10.2.4.1.4 LOCS IPT Outlet Temperature Protective Function Design Function—The design function of the IPT coolant high outlet temperature protective function is to prevent over temperature of the IPT wall or the experiment by initiating a reactor scram and cut-out of the PWL line heaters upon reaching the high IPT outlet temperature setpoint.

10.2.4.1.5 LOCS MUCH Flow Protective Function Design Function—The design function of the MUCH low flow protective function is to prevent over temperature of the IPT wall or the experiment, when a MUCH experiment is installed, by initiating a reactor scram upon reaching the low MUCH flow setpoint. This protective function is used only when a MUCH experiment is installed. The MUCH Allowable Operating Temperature analyses (Boodry and Hendrickson 1995) details that during a bypass flow event, plastic deformation of the pressure tube will occur 11.7 seconds after the initiation of the event. Conservatively, a required MUCH Safety Control Rod Axe Man (SCRAM) time response of less than or equal to 7 seconds has been chosen.

10.2.4.1.6 LOCS AHTL IPT Pressure Tube High Differential Pressure Protective Function Design Function—The design function of the IPT pressure tube high differential pressure protective function is to prevent an over pressure across the pressure tube in excess of the design code Service Level B event by initiating a reactor scram and shutting off all but one loop primary pump upon reaching the high pressure tube differential pressure setpoint.

10.2.4.1.7 LOCS Watchdog Timer Scram Function Design Function—All protective functions described above in Sections 10.2.4.1.1 through 10.2.4.1.6 are processed in the A/B Distributed Processing Unit pairs for each loop facility. If failure of individual loop scram functions (processed in the A/B Distributed Processing Unit pair) were to occur during a transient event (such as, loss of flow) experiment damage could occur. To prevent undetected loss of the loop scram functions, the LOCS will initiate a reactor scram within seven seconds whenever a loss of any loop's A/B Distributed Processing Unit pair occurs (Hendrickson 1994). The watchdog timer scram function provides assurance that the protective functions used in Chapter 15 (Accident Analyses) (See Subsection 10.2.4.1) remain operable when the reactor is operating.

10.2.4.1.8 LOCS Process Control Functions Design Function—The design functions of the loop process control functions include (a) automatic control of loop primary coolant flow, loop primary coolant temperature, loop primary coolant pressure, and pressurizer level; and (b) manual control of loop degassing flow and ion exchange column flow.

The specific performance requirements for the process control functions include controlled variable, monitored variable, operating range, manual and automatic control range, channel accuracy, and control response time. The specific design basis for each of these process control functions is included in INEEL (1999).

10.2.4.1.9 LOCS Equipment Control Functions Design Function—The design function of PWL equipment control functions are to provide mode selection (on-off, manual-automatic) and control interlocks for loop primary coolant pumps and auxiliary equipment as described in INEEL (1999).

10.2.4.1.10 LOCS Surveillance Functions Design Function—The design function of the LOCS surveillance function is to provide the necessary displays, indications, and alarms to the experiment operators and personnel in the reactor control room to permit safe and effective operation of each experiment loop in accordance with sponsor requirements.

10.2.4.2 LOCS Descriptions. This section provides a summary description of the LOCS protective, process control, equipment control, surveillance, and data acquisition functions.

The purpose of the experiment loop control system is to detect and mitigate abnormal conditions within the PWL that can lead to possible experiment or hardware damage (e.g., provide programmatic protection); control the loop parameters according to sponsor experiment requirements; and provide loop equipment protective interlocks.

10.2.4.2.1 LOCS Protective Function Descriptions—Four protective functions are associated with each of the PWL for IPT protection: (1) IPT inlet temperature (high), (2) IPT inlet flow (low), (3) IPT inlet pressure (low), and (4) IPT outlet coolant temperature (high). In addition, there is a protective function on experiment flow (low), applicable for irradiation of a MUCH experiment and a protective function for the AHTL IPT on pressure tube differential pressure (high). Additional parameters can be selected for protective actions ranging from reactor power reductions to a reactor scram. The test sponsor determines for each experiment which additional parameters are necessary to provide programmatic experiment protection. For example, specimen temperatures can be selected to provide either a reactor scram or setback if necessary for experiment protection.

The protective functions for IPT have a scram as the mitigating action. MUCH experiment flow will always have the mitigating action of a reactor scram; however, this feature will be disabled when an experiment other than a MUCH experiment is installed. These protective functions are assumed functional in determination of the frequency of occurrence of off-normal events associated with the loop operation.

All IPT protective functions are operated in either one-of-two (1/2) or two-of-three (2/3) trip logic. The scram trip signals are interfaced to the ATR Plant Protection System. Upon protective function trip, certain protective functions also initiate specified process control interlock actions.

Each loop A/B Distributed Processing Unit pair monitors another loop A/B Distributed Processing Unit pair. Upon loss of communication of the monitored Distributed Processing Units, the watchdog loop will initiate a reactor scram.

The applicable design requirements and the requirements for analyses, fabrication, and operation of the LOCS are provided in Section 1.3 of INEEL (1999).

10.2.4.2.2 LOCS Process Control Functions Description—Several loop parameters can be controlled. These include loop primary coolant flow, loop primary coolant temperature, loop primary coolant pressure, pressurizer level, loop degassing flow control, and ion exchange column flow control.

The flow is controlled by adjusting a valve opening; it uses flow monitoring for feedback to the controller. Coolant temperature is controlled in two ways. Excess heat from an IPT is removed by adjusting the flow through the loop heat exchanger using downstream temperature monitoring for feedback to the controller. Heat addition using line heaters ahead of the IPT is controlled by silicon controlled rectifiers (SCRs) by using the line heater outlet temperature monitoring for feedback to the controller. The operator balances the settings for temperature control through adjustments that show the test specimens are within the required temperature ranges. The coolant pressure is controlled by adjusting the pressurizer heat addition through the use of SCRs, and has pressurizer pressure as feedback to the controller. The operator adjusts the setting so that the IPT inlet pressure meets sponsor's experiment requirements. The pressurizer level is automatically controlled by turning on and shutting off a makeup pump using pressurizer low- and high-level settings as trip points.

The loop primary coolant pumps, line heaters, pressurizer heaters, and makeup pumps have various control modes to meet process control functional requirements. For example, the loop primary coolant pumps have the following modes: on, off, and R-T-D (run-to-destruct). Also, various control interlocks protect the system from excessive excursions caused by abnormal operation of the equipment.

10.2.4.2.3 LOCS Equipment Control Description—Equipment controls are provided for loop primary coolant pumps, loop line heaters, pressurizer heaters, coolant makeup pumps, 1C-W HDW pumps, makeup system pumps, and conductivity flow control.

10.2.4.2.4 LOCS Surveillance Functional Description—A central control area is provided for the experiment operators to maintain surveillance of experiment loop protection, control, and monitoring functions. The primary means of providing the specified loop functions and communicating experiment loop data status and other selected facility information is a computer-based distributed control system (DCS) LOCS. There are six operator stations of which any can be used to control a loop.

The DCS consists of independent, rack-mounted control computers, with associated input/output modules, at several locations on the reactor first and second basements. All main DCS nodes communicate by way of a dual, redundant, fiber-optic network. The DCS is capable of maintaining uninterrupted process control at this rate while simultaneously processing a maximum of 100 alarms and performing equipment action responses within the specified time intervals.

A detailed listing of the data surveillance parameters for each loop is included in INEEL (1999).

10.2.4.3 LOCS Evaluations. As the probability of occurrence for certain events is affected by the scram from the loop control system, an evaluation for the LOCS was conducted as part of the initial design and installation and is detailed in Close (1994). Another evaluation was conducted to ensure that failures of the LOCS would be within the envelope of the programmatic loop control system failure analyses for Loops 2C-S/2C-E (Cardinal and Mrazik 1976) and is detailed in Hendrickson (1994). A function denoted as the Watchdog Timer was added to each loop Distributed Processing Unit A/B pair (refer to INEEL (1999) for further details) as a result of this report (Hendrickson 1994) and USQ Safety Evaluation SE-97-008 (Penny 1997). Each loop monitors another loop and upon loss of communication of the monitored Distributed Processing Units the watchdog loop will initiate a reactor scram. The LOCS setpoints for each loop are established each reactor cycle for pneumatic, mechanical, and electronic devices interfacing with the LOCS to control and protect the loop equipment and experiments within the established service limits derived from the system or component design analyses. Setpoint values are specified before reactor operation for each experiment. This information is reviewed and approved before each reactor cycle in conjunction with the ESA.

10.2.4.4 LOCS Testing and Inspection Requirements. Routine and preventative maintenance activities on the components of the LOCS, including standards calibration, channel accuracy and response time, etc., are developed and performed in accordance with the type of maintenance and intervals recommended by the equipment vendor. There are no inspections of LOCS equipment required by the *ATR Inservice Inspection Plan* (INEEL 2002).

Required frequencies of channel calibration and functional checks have been established for important-to-safety PWL instrumentation and controls (see Section 10.2.6.2). The surveillance intervals are based on system design and performance and the historical intervals from the past operation. Surveillance intervals may be changed with adequate basis (e.g., long-term results of surveillance activities). The experiments safety analysis criteria do not include setpoint value or accuracy requirements. Programmatic requirements for these parameters are much more restrictive than reactor safety requirements. These parameters are controlled at the facility procedural level.

10.2.5 Specialized Experiment Loop Configurations and Equipment

This section provides a discussion of specialized PWL experiment equipment that is significant to the ATR safety analyses.

10.2.5.1 Powered Axial Locating Mechanism (PALM). The PALM operates in conjunction with a modified experiment hanger rod that penetrates a modified test closure plug and permits axial movement of the test train during reactor operation. As with the standard test closure, the PALM closure assembly is a part of the PWL pressure boundary. The following subsections provide the (a) design function, (b) component descriptions, (c) evaluations, and (d) testing and inspection requirements associated with this modification.

10.2.5.1.1 PALM Design Function—The design functions for this assembly are (a) to provide a containment for the stored energy within the loop when operated at elevated temperature and pressure, (b) to prevent loss of integrity of the modified closure assembly configuration, (c) to minimize the probability of a loop blowdown and the attendant risk associated with voiding of the flux trap as analyzed in Chapter 15 (Accident Analyses), and (d) to prevent uncontrolled movement of the experiment and any attendant flux peaking or reactivity effects beyond those analyzed and approved in conjunction with the cycle CSAP.

10.2.5.1.2 PALM Description—The PALM is used to optimize certain experiment conditions over the period of a reactor cycle by controlled axial movement of the experiment within the pressure tube [e.g., (a) small incremental movements to effectively compensate for changes in the axial power distribution caused by depletion of the reactor fuel, or (b) cyclic movement used to simulate power transients].

Controlled axial movement of the experiment is accomplished by using a drive mechanism that engages an extension of the experiment hanger rod as shown in Figure 10.2-17. The hanger rod extension passes through a sliding seal in a modified version of the experiment closure assembly. The drive mechanism is actuated by a motor and servo amplifier controlled from a servo drive unit control panel stationed in an enclosure on the reactor main floor adjacent to the south side of the reactor biological shielding. The PALM can be manipulated from the control panel. Control circuitry and a mechanical stop prevents withdrawal of the PALM experiment beyond the closure seal. A detailed design description of the PALM drive system, analyses of its operation, and the PALM Operating Manual are provided in Durney (1982, 1984) and Bettis (1982, 1984a, b, and c, and 1994).

10.2.5.1.3 PALM Evaluation—To prevent excessive reactivity changes during operation with two PALM experiments, the PALM control system has interlocks that prevent simultaneous movement of both PALM experiments (except during an updrive which is used for experiment protection) (Durney 1982). For experiments where the PALM system is used for small position adjustments (not automatic cycling), the PALM control system is aligned to preclude any automatic movements (Durney 1984). The analyses of reactivity insertion events in Chapter 15 (Accident Analyses) result in limitations on potential PALM experiment void and test failure reactivities comparable to those of other non-driven experiments. Evaluations for each PALM experiment are conducted as required for the other types of IPT experiments including CSAP analyses and tests during power escalation to determine that the reactivity changes caused by normal movement of the PALM experiment will not exceed the capability of the reactor control system and analyses of potential accident reactivity insertions.

10.2.5.1.4 PALM Testing and Inspection Requirements—Testing is performed on the PALM control system prior to operation to minimize the probability of control system failures analyzed in Chapter 15 (Accident Analyses). Testing prior to full power operation (greater than 3 MW but less than 50% of nominal full power) is performed on PALM experiments to ensure the reactivity changes due to movement of the PALM experiment are within the limits analyzed in Chapter 15 (Accident Analyses). The PALM seals require occasional actuator movement to ensure that seal integrity is maintained. The movement required is less than one in. with a frequency of about twice a week (Durney 1984).

10.2.5.2 Maximum Useful Capacity Holder Experiment. The MUCH was developed to expand the size of the original experiment holder by eliminating the separate flow tube. The following subsections provide the (a) design functions, (b) component descriptions, (c) evaluations, and (d) testing and inspection requirements associated with this modification.

10.2.5.2.1 MUCH Design Function—The MUCH experiment assembly includes a modified flow tube receiver extension that extends from the bottom of the MUCH experiment to the flow receiver so that flow is directed up through the experiment and an experiment flow venturi. The experiment flow venturi measures flow through the experiment as flow could possibly leak through the experiment shroud stack thus short cutting the normal flow path through the experiment and past the IPT reducing cooling flow to the IPT. The design function for the MUCH shroud interfaces is to allow operation of a segmented flow tube (which allows larger diameter experiments) while minimizing the probability of flow leakage through the experiment segment joints.

10.2.5.2.2 MUCH Description—The MUCH experiment allows the test sponsor to irradiate more specimens in the same flux trap by replacing the flow tube with test hardware as shown in Figure 10.2-18. This increases the available irradiation space. Each MUCH test contains a single venturi with three separate sets of delta pressure measurement taps. The MUCH experiment flow measurement system is part of the LOCS and upon a low flow the LOCS will initiate a reactor scram (see Section 10.2.4.1.5). A detailed design description of a MUCH experiment and analyses of its operation are provided in Bettis (1989).

10.2.5.2.3 MUCH Evaluation—Evaluations for the MUCH equipment design were conducted as part of the initial design and installation and are detailed in McCracken (1994). Evaluation of fueled specimen and hafnium shrouds in a MUCH experiment is detailed in Hendrickson (1996b).

10.2.5.2.4 MUCH Testing and Inspection Requirements—Per the MUCH safety analyses (McCracken 1994), the experiment sponsor is to perform a close visual inspection of the shroud-to-shroud interfaces during assembly. This inspection along with flow testing prior to reactor startup should detect significant leakage.

10.2.6 Specific PWL Experiment Safety Analyses Criteria

Each PWL experiment will have an approved ESA as described in Section 10.1.6 which addresses the General Experiment Safety Analyses Criteria outlined in Section 10.1.7 and the specific PWL experiment safety analyses criteria described below. These specific criteria were developed based on reviews of the evaluations summarized in the previous subsections.

10.2.6.1 IPT Protection Criterion. The following IPT Protection Criterion supplements the ATR Plant Protection Criterion:

Damage to either the pressure tube or envelope tube (such that the IPT might require replacement) is acceptable during a Condition 2 fault, with the exception that the damage will not prevent a safety rod from functioning. However, a Condition 2 fault shall not cause failure of either the pressure tube or envelope tube in the PWL.

The IPT Protection criterion applies during reactor operation and compliance must be demonstrated prior to reactor operation.

10.2.6.2 Mechanical Design Criteria

10.2.6.2.1 IPT Fluence and Creep Strain—Prior to reactor operation, IPT fast neutron fluence (energy>1 MeV) and creep strain are shown to be less than the limits below unless otherwise supported by a specific evaluation:

IPT Type	Creep Strain	Fluence without flaw size inspection (n/cm^2)	Fluence after flaw size inspection (n/cm^2)
SIPT	$\leq 1.8\%$	$\leq 3.0 \times 10^{22}$	$\leq 5.5 \times 10^{22}$
LIPT	$\leq 1.3\%$	$\leq 3.0 \times 10^{22}$	$\leq 5.5 \times 10^{22}$
AHTL IPT	$\leq 2.0\%$	$\leq 2.7 \times 10^{22}$	$\leq 2.7 \times 10^{22}$

10.2.6.2.2 Comparison to Design and Blowdown Analyses—Prior to reactor operation, the operation of each PWL facility that is operated at greater than 200°F or greater than 750 psig (1500 psig for the AHTL) is compared with the IPT and PWL facility evaluations (Sections 10.2.1.3 and 10.2.2.3) and the loop blowdown envelope analysis (Terry 1998) to ensure that the operation is consistent with the assumptions and results of the analyses. The table below is a compilation of these analyses with the more restrictive controlling limits listed. If the experiment parameters are within the blowdown analysis (Terry 1998), then operation of the experiment is within the assumptions of the analyses in UFSAR Chapter 15 for a loop blowdown. This analysis (Terry 1998) assumed the experiment was near saturation; using the applicable maximum allowable temperature analysis (Boodry and Hendrickson 1995; Hendrickson 1995 and 1996a) to determine the maximum allowable inpile tube temperatures prevents operation of the experiment near saturation. PWL experiment parameters can affect the reactivity insertion rate. Both the total insertion, as limited below, and the rate of insertion are

significant to the consequences of the analyses. For the LIPT, the ratio of the flow through the test train to that in the surrounding annulus affects the reactivity insertion rate. With a 70:30 flow split ratio, the void worth to the pressure tube is limited to 1.0$. With a 60:40 flow split ratio, the void worth to the pressure tube is limited to 0.88$. Operating parameters must fall within the limitations of the table below or additional analyses must be completed to support the operation. Operation of an experiment outside the limits below may be shown to be acceptable (usually by limiting other experiment conditions) if analyses demonstrate that conducting the experiment is within the ATR Plant Protection Criteria as discussed in Chapter 15 (Accident Analyses). Additionally, the actual PWL thermal cycles must be compared to the assumptions of the fracture mechanics analyses and shown to be enveloped (Refer to Section 10.2.1.4.2). The maximum allowable operating temperature analysis (Boodry and Hendrickson 1995; Hendrickson 1995 and 1996a) determines the maximum allowable IPT inlet and outlet temperature for the given operating conditions (IPT inlet or MUCH flow, IPT inlet pressure, fission power, and source power) to maintain the average IPT wall temperature[a] at less than or equal to 800°F or bulk water conditions at or below saturation (whichever is more limiting). The IPT inlet and outlet temperature scram setpoints are set equal to or less than the maximum allowable IPT inlet and outlet temperatures, respectively. The maximum allowable IPT inlet and outlet temperatures (Boodry and Hendrickson 1995; Hendrickson 1995 and 1996a) are 10°F less than calculated allowable temperatures to account for uncertainties and for conservatism. This table sets the controlling limits for source power, void worth, flow, pressure, temperature, and fission power.

Parameter		Standard Loop Facility (1D-N, 2B-SE, 2D-SW)	Large Loop Facility (2E-NW)	AHTL (1C-W)
Maximum Source Power (MW)		60	34	60 MW if loop pressure ≤ 2500 psig, otherwise ≤ 50 MW
Maximum Loop Void Worth ($)		0.80	1.00$ [70:30 flow split] 0.88$ [60:40 flow split]	0.80$
Flow Rate [inlet or MUCH] (gpm)		20 to 60	120 to 350	20 to 60
Inlet Pressure (psig)	Design	2500	2500	3800
	Nominal	1800 to 2200	1800 to 2200	1800 to 3400
Maximum Allowable IPT Inlet and Outlet Temperature (°F)		The Maximum Allowable Operating Temperature Analyses (Boodry and Hendrickson 1995; Hendrickson 1995 and 1996a) determine the maximum allowable IPT inlet and outlet temperatures.		Less than 699°F or as determined by the maximum allowable operating temperature analysis. (Boodry and Hendrickson, 1995)
Maximum Test Fission Power (kW)		Standard -200 MUCH –0	200	200 kW if loop pressure ≤ 2500 psig, 0 kW if MUCH experiment or loop pressure > 2500 psig
Maximum Fission Power over a length of 9.6" (kW)		56		

[a]. This requirement is imposed on the average IPT wall temperature radially at the hottest location.

10.2.6.3 Required Instrumentation and Controls

10.2.6.3.1 LOCS Protective Functions—During reactor operation, the instrumentation for each PWL facility includes the following operable scram channels (and associated surveillances) as indicated below with at least one-out-of-two logic (except for the LOCS watchdog scram, which is a single channel). If number of operable channels is less than required in the below table, the reactor is scrammed within 15 minutes. The surveillance frequencies (and the associated extension intervals) in the below table will be controlled in the same manner as surveillance frequencies for the ATR.

Parameter	Required Number of Operable Scram Channels given Reactor Operation Status		Calibration Frequency	Setpoint Frequency	Functional Test Frequency
	Pressurized	Depressurized			
Low Loop Facility Flow	2	2	Semi-annually	100 days	100 days
Low IPT Inlet Pressure	2	0	Semi-annually	100 days	100 days
High Bulk Water Temperature (IPT Inlet or Outlet)	2	2	Semi-annually	100 days	100 days
Low MUCH Experiment Flow	2	2	Semi-annually	100 days	100 days
(MUCH experiments only)	X	X	X	N/A	Time response – 12 months
LOCS Watchdog	1	1	N/A	N/A	100 days
AHTL High Pressure Tube Delta Pressure (1C-W ≥ 2500 psig)	2	2	Annually	N/A	12 months

10.2.6.3.2 Radiation Monitoring—Prior to reactor operation, one operable in-cubicle radiation instrumentation is required for any PWL with a fueled experiment. Suitable manual sampling will be established if the in-cubicle radiation instrumentation is inoperable.

10.2.6.3.3 MUCH Experiments Channel Response Time—Prior to reactor operation, the total response time of the MUCH scram channels for experiment cooling flow is less than or equal to 7.0 seconds.

10.2.6.3.4 IPT Annulus Moisture Detection—Prior to reactor operation, each IPT will have an operable annulus moisture detection system. Should the IPT annulus moisture detection system become inoperable during reactor operation the system will be operable prior to the next scheduled reactor startup.

10.2.6.3.5 Dual PALM Cycling Controls—The PALM control system will prevent simultaneous cycling of two PALM experiments during reactor operation. This feature will not prevent simultaneous withdrawal of the PALM experiments out-of-core due to abnormal conditions. This feature is functionally checked prior to reactor operation.

10.2.6.3.6 Special Controls for Positioner Experiments—The following controls will be established prior to reactor operation whenever the PALM control system is used to operate a Positioner experiment in-core:

- The PALM control system is in translator mode
- The updrive feature is inhibited
- The jog and home drive speeds potentiometers are set to zero
- The power to the PALM drive motor is off when the test is not moving
- The keys to the PALM drive system (key switches and cabinet door locks) are controlled by the Shift Supervisor.

10.2.6.3.7 Pressurizer Leak Rate Surveillance—During reactor operation, the pressurizer leak rate in percent per hour shall be determined using non-temperature compensated pressurizer level at least once per shift. If the leak rate exceeds 5%/hour, during the next available reactor outage with the loop pressurized but cooled down, positive identification of the sources of the leakage is required including visual inspection of loop piping including the piping in the subpile room, the subpile room corridor, and in the nozzle trench. The reactor is to be immediately shutdown if the pressurizer leak rate exceeds 13%/hour.

10.2.6.4 Reactivity Criteria

10.2.6.4.1 IPT Void Reactivity Addition Limits (PWL Experiments)—Prior to reactor operation, the potential IPT void reactivity addition of PWL experiments must be limited to the maximum loop void worth values in Section 10.2.6.2.2 (Maximum Loop Void Worth) when the PWL conditions are > 200°F or > 750 psig (1500 psig for the AHTL) or a specific analyses must be completed.

10.2.6.4.2 Static Worth of a PALM Experiment—The static reactivity worth over the full travel of any single, regularly cycled PALM experiment is shown to be less than or equal to the integral worth of the regulating rod over its allowable operating range by cycling the PALM experiment during low power operation. Refer to Section 10.2.5.1.4.

10.2.6.4.3 Experiment Holder/Hanger Rod Failure Reactivity Insertion—For experiments, administrative controls, test stops, and/or followers are provided to limit the worth of credible failures in the experiment assembly within the IPT. The reactivity insertion from this event is bounded by analyses used in Chapter 15 (Accident Analyses) if the reactivity insertion ≤ 0.10$. Whenever the reactivity insertion exceeds 0.10$, additional analyses is performed to show that the combined reactivity insertion from a loop decompression and the experiment failure is within the ATR Plant Protection Criteria for a Condition 4 event. The verification of the reactivity insertion is completed prior to reactor operation.

10.2.6.4.4 Flux Trap Cascading—Experiments in a reactor flux trap that generate significant heating and transfer the heat to the associated coolant very rapidly have the capability of adding additional positive reactivity during a power transient. This effect is known as cascading. Analyses in Chapter 15 (Accident Analyses) establish a reactivity insertion envelope for this effect. The cascading reactivities used in Chapter 15 were developed from the previous analyses of a 0.75$ step insertion (EG&G 1994). The cascade reactivity envelope as defined in Chapter 15 is 0.05$ in 0.13 seconds for Condition 2 events, 0.03$ in 0.04 seconds for Condition 3 events and 0.17$ in 0.15 seconds for Condition 4 events. The assumed cascading becomes an envelope considered in the operation. A higher cascading reactivity insertion rate may be shown to be acceptable (usually by limiting other experiment conditions) if analyses demonstrate that conducting the experiment is within the ATR Plant Protection Criteria as discussed in Chapter 15. The verification of cascade reactivity criteria is completed prior to reactor operation.

10.2.6.4.5 Flux Trap Reactivity Feedback—The positive reactivity feedback from the flux traps was considered significant in the analyses of the PCS flow coast down event during a loss of commercial power (Chapter 15.3, Decrease in Reactor Primary Coolant Flow Rate) (Terry 1994). The reactivity feedback from the flux traps shall not exceed the values of the analyses without additional analyses to demonstrate compliance with the plant protection criteria. The verification of the reactivity feedback is completed prior to reactor operation.

10.2.6.5 Thermal-Hydraulic Criteria

10.2.6.5.1 PWL Surfaces Cooled by Reactor Primary Coolant—During reactor operation with reactor power greater than 3 MW, when reactor primary coolant is used to cool surfaces of PWL facilities, the following thermal-hydraulic criteria are used to ensure no flow instability occurs during normal transient conditions:

A. The departure from nucleate boiling (DNB) ratio is always greater than two; or the heat flux at the hottest spot is lower, by at least three standard deviations, than the DNB heat flux computed for the condition of reactor primary coolant pumps coast down to emergency flow assuming reactor power is initially 250 MW and a PPS scram occurs.

B. The rise in bulk reactor primary coolant temperature along the hot track of the PWL surface is less than half the value that would cause flow instability; or the highest reactor primary coolant temperature is lower, by at least three standard deviations, than the value that would cause the flow to become unstable, computed under the same condition as (A) above.

C. Any perturbation by an experiment of reactor primary coolant flow in a fuel element shall not cause the protection criteria of Chapter 15 (Accident Analyses) to be exceeded.

The thermal hydraulic criteria is verified prior to reactor operation.

10.2.6.5.2 Gas Leakage—During reactor operation, experiments and experiment facilities will not leak gas into the reactor such that the IPT Protection Criterion in Section 10.2.6.1 and the ATR Plant Protection Criteria as discussed in Chapter 15 (Accident Analyses) are exceeded. The verification is required prior to reactor operation.

10.2.6.6 Verification of PWL Process Variables. The PWL operating conditions are verified to be as specified or within the limits of the ESA specifications prior to each scheduled startup.

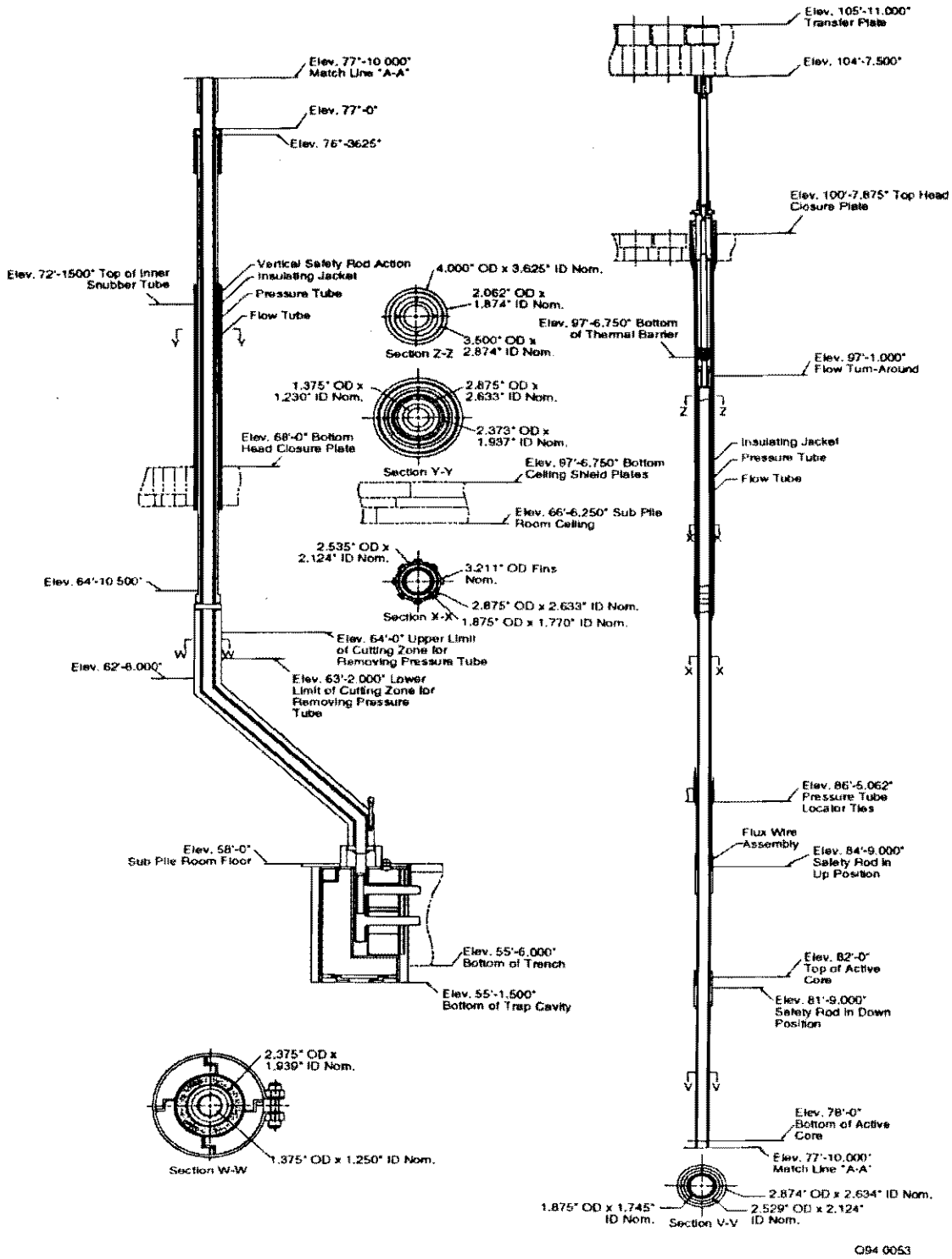

Figure 10.2-1. View of typical SIPT elevations. **(For Information Only)**

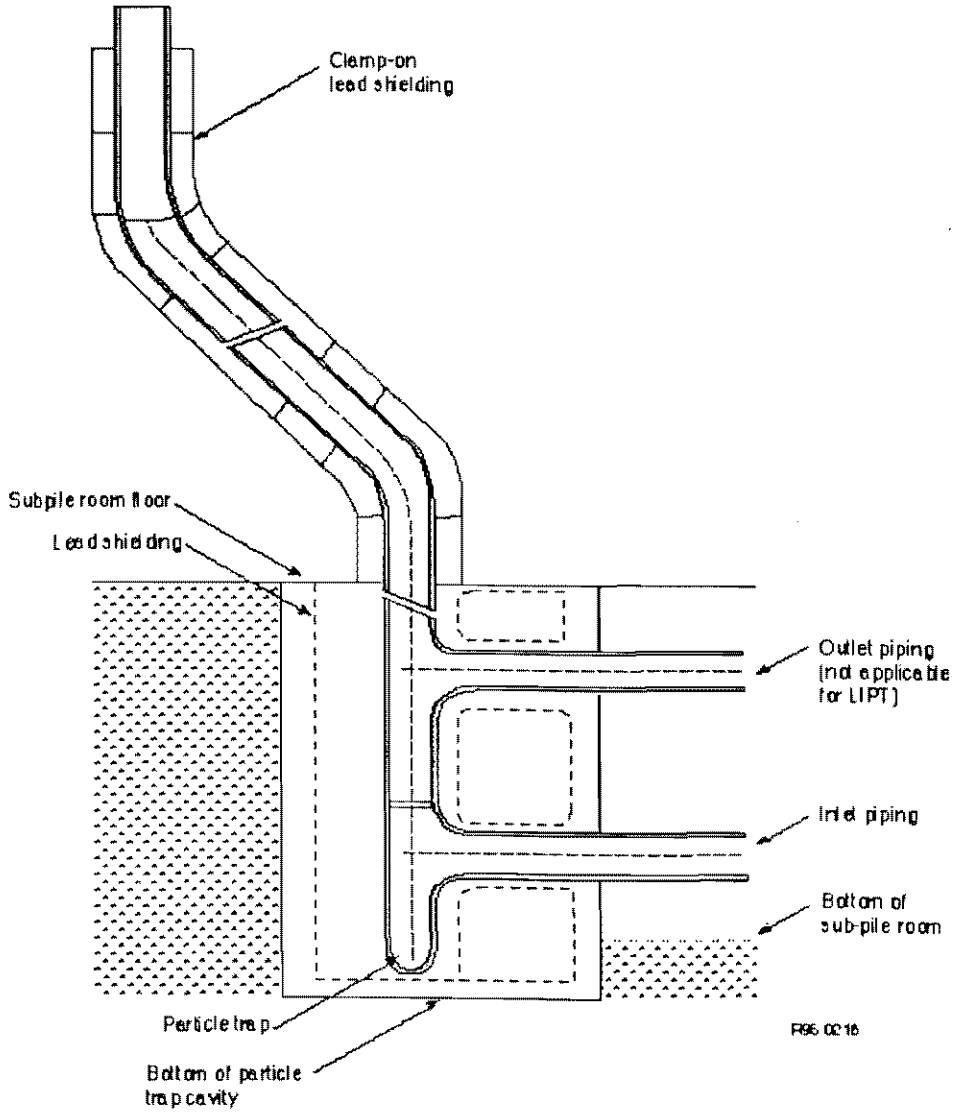

Figure 10.2-2. Representative SIPT sub-pile room piping assembly. **(For Information Only)**

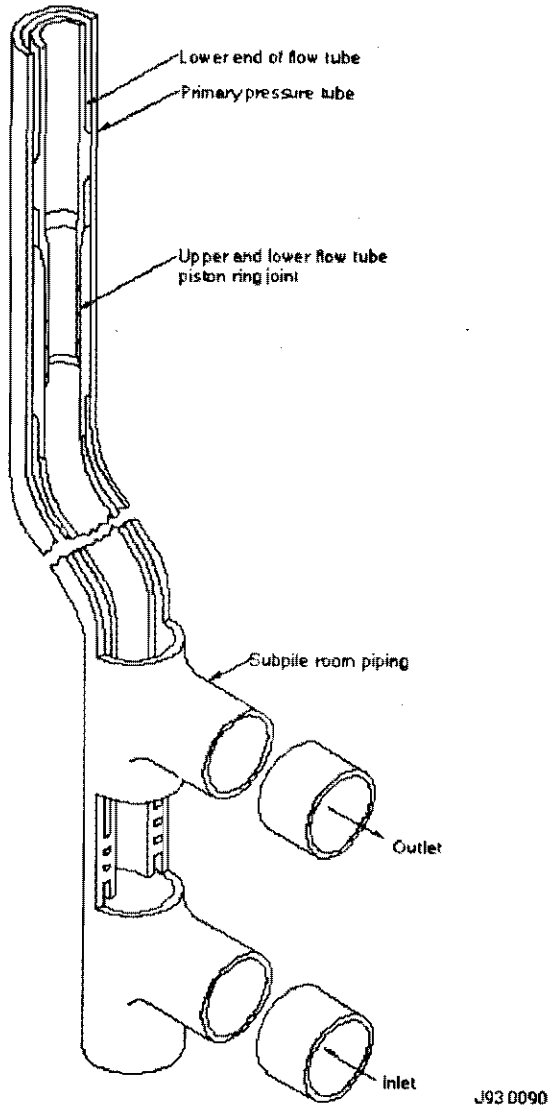

Figure 10.2-3. Representative standard *IPT* flow tube piston ring seal joint. **(For Information Only)**

FOIA Exemption 2- Circumvention of Statute (Pages 54-55)

FOIA Exemption 3 UCNI, Exemption 7f (Pages 10-54 – 10-55 -- In-pile tube detailed drawings)

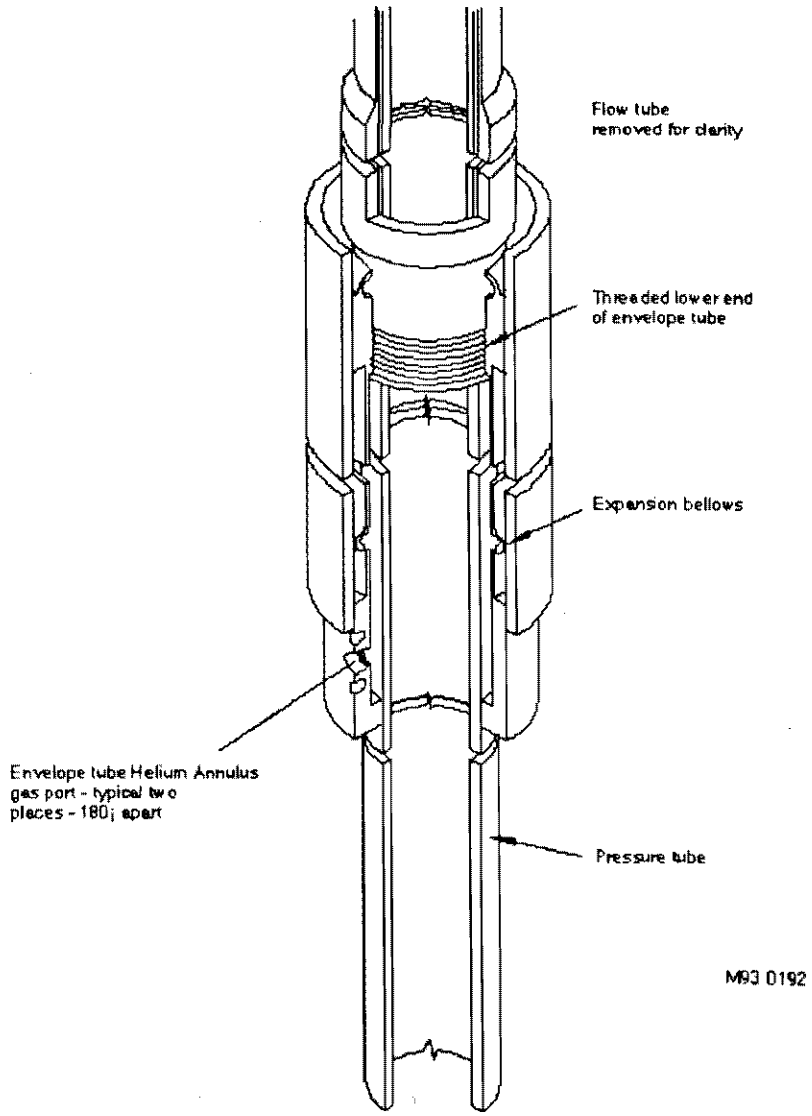

Figure 10.2-6. Typical lower envelope tube bellows seal configuration. **(For Information Only)**

CHAPTER 10 – EXPERIMENT AND IRRADIATION FACILITIES - UPGRADED FINAL SAFETY ANALYSIS REPORT FOR THE ADVANCED TEST REACTOR	**Identifier:** SAR-153 **Revision:** 10 **Page:** 10-57 of 10-84 **Effective Date:** 08/10/04

CHAPTER 10 – EXPERIMENT AND IRRADIATION FACILITIES - UPGRADED FINAL SAFETY ANALYSIS REPORT FOR THE ADVANCED TEST REACTOR	**Identifier:** SAR-153 **Revision:** 10 **Page:** 10-58 of 10-84 **Effective Date:** 08/10/04

CHAPTER 10 – EXPERIMENT AND IRRADIATION FACILITIES - UPGRADED FINAL SAFETY ANALYSIS REPORT FOR THE ADVANCED TEST REACTOR	**Identifier:** SAR-153 **Revision:** 10 **Page:** 10-59 of 10-84 **Effective Date:** 08/10/04

CHAPTER 10 – EXPERIMENT AND IRRADIATION FACILITIES - UPGRADED FINAL SAFETY ANALYSIS REPORT FOR THE ADVANCED TEST REACTOR	**Identifier:** SAR-153 **Revision:** 10 **Page:** 10-60 of 10-84 **Effective Date:** 08/10/04

CHAPTER 10 – EXPERIMENT AND IRRADIATION FACILITIES - UPGRADED FINAL SAFETY ANALYSIS REPORT FOR THE ADVANCED TEST REACTOR	**Identifier:** SAR-153 **Revision:** 10 **Page:** 10-61 of 10-84 **Effective Date:** 08/10/04

FOIA Exemption 3 UCNI, Exemption 7f (Pages 10-57 – 10-61 -- In-pile tube detailed drawings)

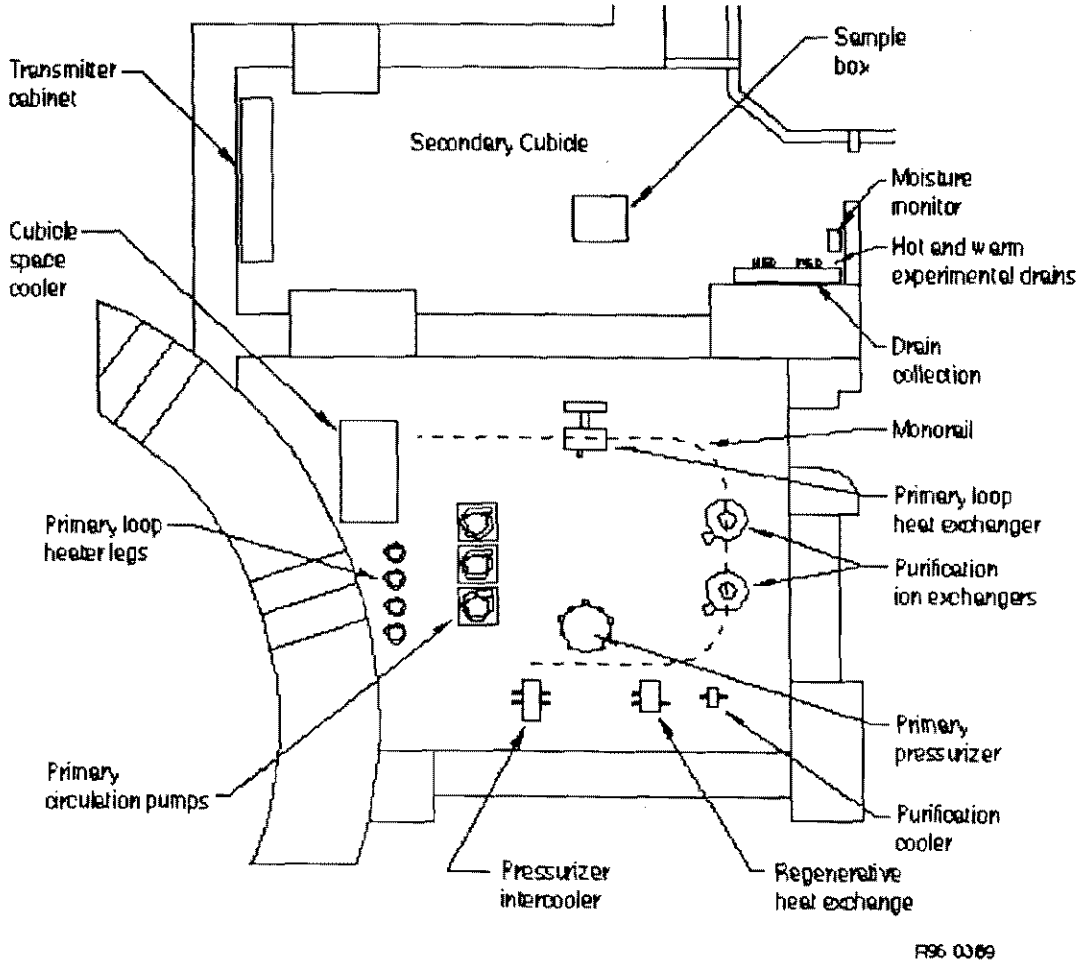

Figure 10.2-12. Typical ATR Loop primary and secondary cubicles. **(For Information Only)**

FOIA Exemption 3 UCNI, Exemption 7f (Page 10-63 – Loop facilities flow diagram)

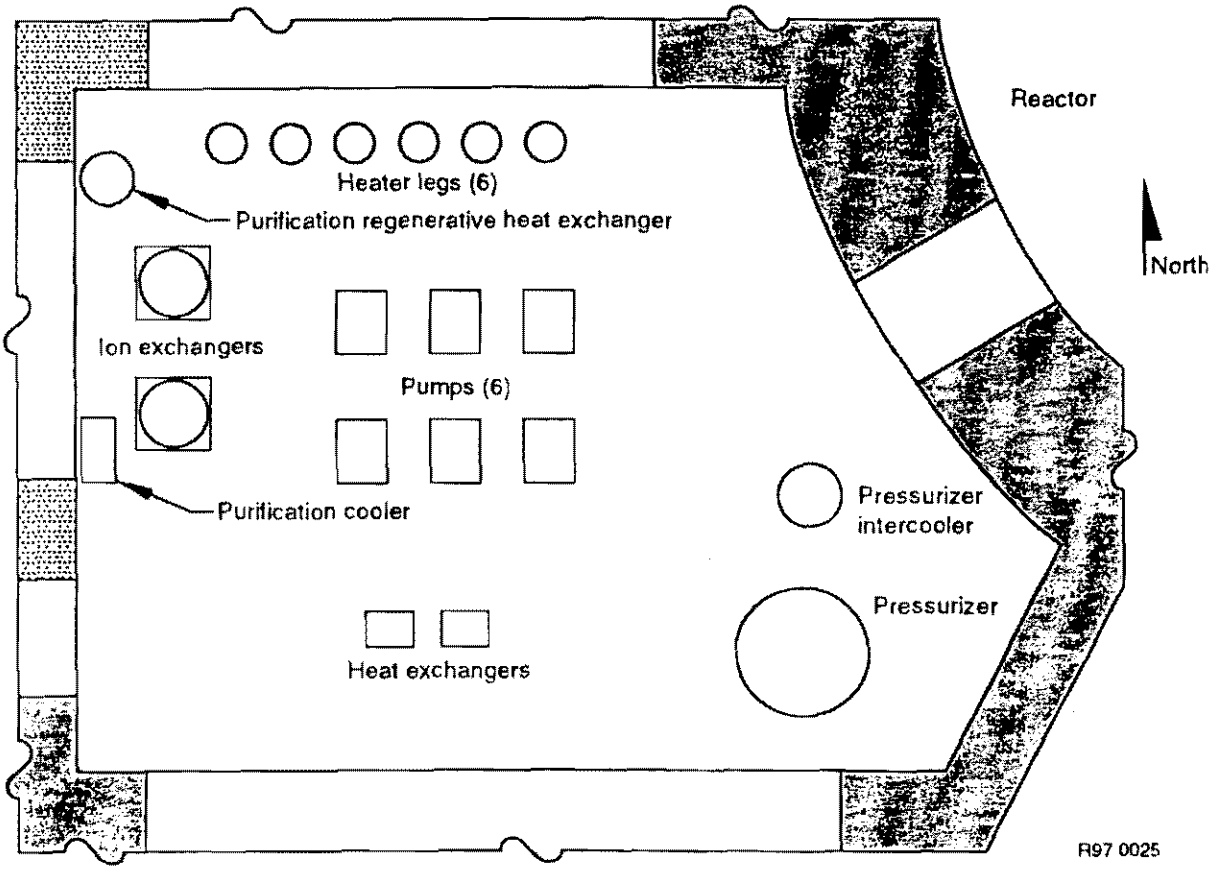

Figure 10.2-14. AHTL primary cubicle plan view. **(For Information Only)**

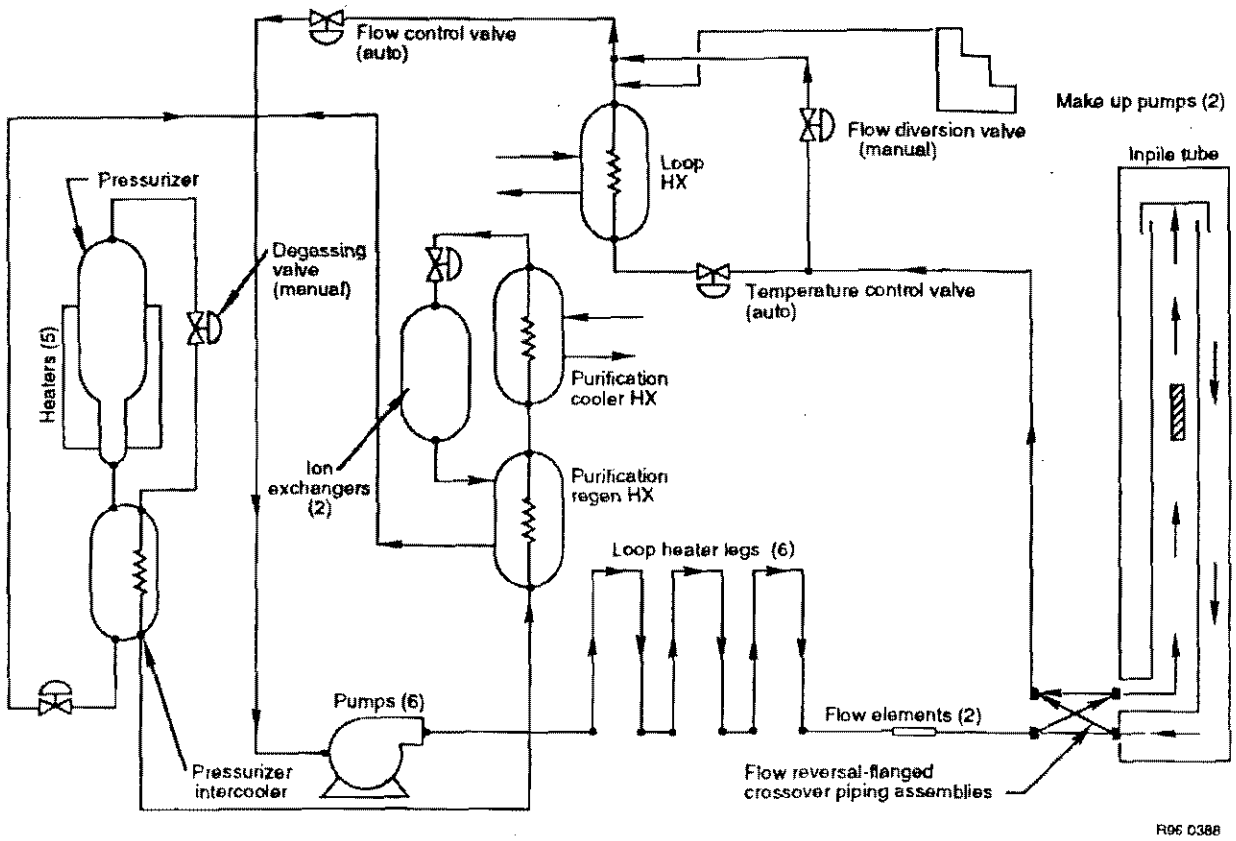

Figure 10.2-15. AHTL sub-pile room crossover piping assembly. **(For Information Only)**

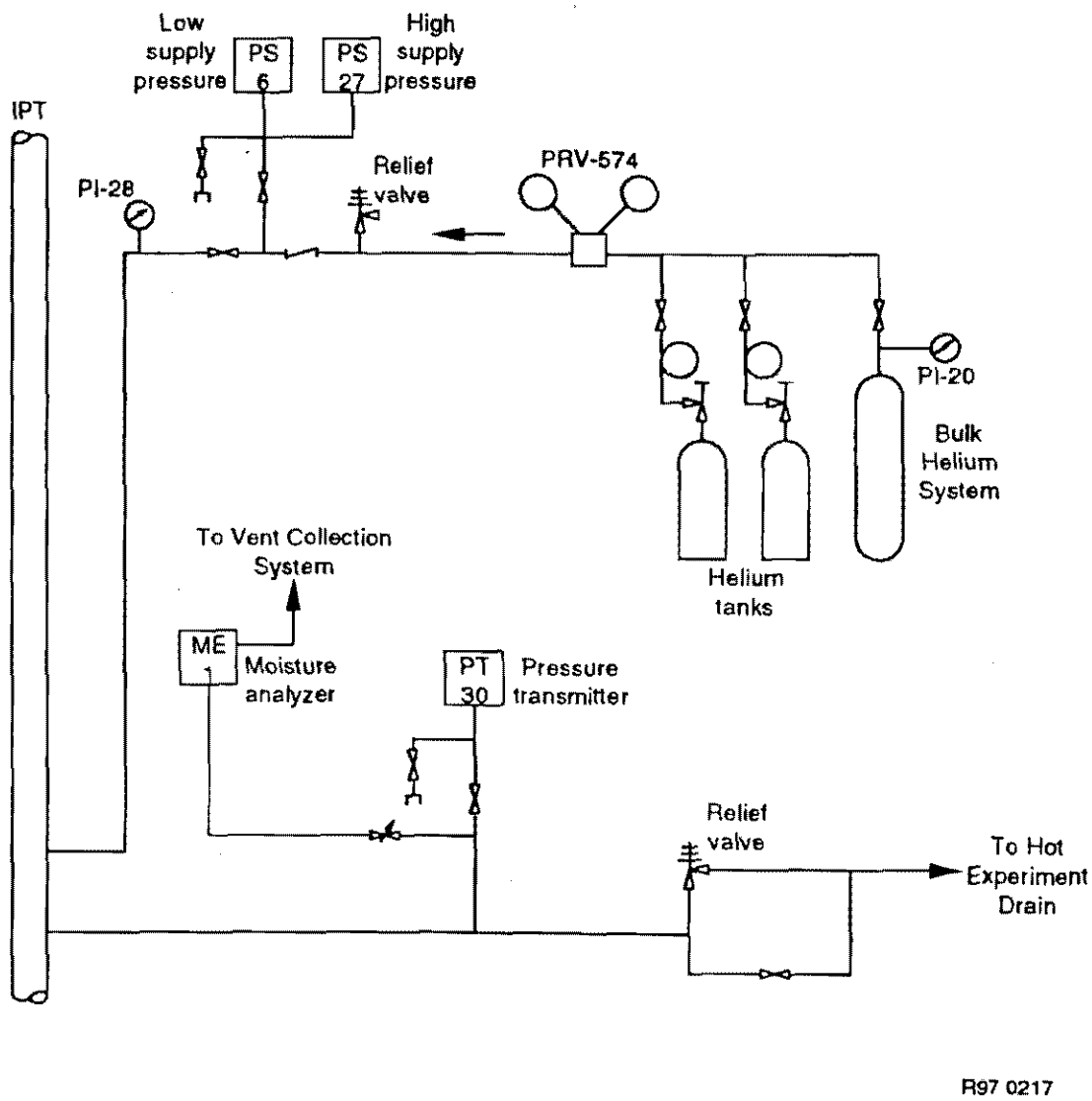

Figure 10.2-16. Flow diagram of typical helium and moisture detection systems. **(For Information Only)**

FOIA Exemption 3 UCNI, Exemption 7f (Pages 10-67 – 10-68 – Experiment configuration drawings)

10.3 Capsule Irradiation Facilities

The subsections that follow provide a discussion of the reactor core and capsule irradiation tank experiments excluding the IPT facilities.

As discussed briefly in Section 10.1, the core design incorporates an array of core and reflector irradiation facilities ranging in diameter from 0.5 to 5 in. Generally, experiments designed for these facilities are encapsulated fuel, material specimens, or target material for neutron activation contained or stacked in aluminum, zircaloy, or stainless steel capsules, adapted to and positioned in the available core or capsule irradiation tank locations by baskets of suitable materials. Drop-in and lead experiments are cooled by reactor primary coolant flow, as compared to the pressurized loop experiments for which the environment is controlled.

The following subsections provide the design function, description, evaluations, and testing and inspection requirements for the capsule irradiation facilities and experiments.

10.3.1 Capsule Irradiation Facilities and Experiments Design Functions

The design functions of the capsule irradiation facilities and experiments are (a) to prevent unacceptable release of radioactive materials or fission products to the reactor PCS, (b) to prevent unacceptable reactivity insertions or unacceptable alterations to the reactor feedback characteristics, and (c) to prevent unacceptable thermal-hydraulic characteristics that could potentially influence the required margins to flow instability and departure from nucleate boiling in the experiment or the reactor fuel elements.

10.3.2 Capsule Irradiation Facilities and Experiment Description

The plan view of the reactor core and capsule irradiation tanks in Section 10.1, Figure 10.1-1 shows the various capsule irradiation facilities. The 40-element serpentine core configuration defines positions for nine experiment flux trap locations that are identified by their orientation to the north-south axis of the reactor core. During the 1994 core internal change out, four IPTs were removed from the reactor NE, E, C, and S flux trap positions and replaced with capsule irradiation facilities. These capsule irradiation facilities can contain an irradiation housing assembly which are reactor water cooled irradiation facilities as seen in Figures 10.3-1 and 10.3-2. The in-core sections of the aluminum housings are approximately 2.5 in. in diameter and will accommodate 7 individual capsule trains or rods per flux trap location. External spacer buttons center the assemblies in the flux trap; they also provide a coolant channel between the assembly and the flux trap baffle, as well as through the internal spacers between the individual capsule trains.

Section 10.1, Figure 10.1-1 identifies "B" holes located in the beryllium reflector; "H" holes surrounding the center flux trap; "A" hole capsule irradiation spaces located in the neck shim housing; "I" holes, which range in diameter from 1.5 to 5 in. and are located in the beryllium reflector outside the shim drum ring; and outer tank ("ON" and "OS" positions) located outside of the core reflector tank.

10.3.3 Capsule Irradiation Facility and Experiment Evaluations

The capsule irradiation facilities and experiments typically have limited potential for significant effects on core performance. The capsule facilities in the reflector tank are typically small diameter holes through the reflector and neck shim housing and the flux traps without IPT. There are some larger diameter holes on the periphery of the reflector; these have limited neutronic effect on the core. The specific loadings of these facilities vary with the experiment programs and are not specifically evaluated in the UFSAR because of limited potential effects and significant variations possible in design. However, the irradiation of experiments in the capsule facilities requires evaluation in an ESA to ensure acceptable consequences of potential failures. One consideration is for the potential addition of positive reactivity due to off-normal conditions in the experiment. Two effects to be considered are potential voiding in the capsule facility and potential movement of the experiment.

The capsule facilities and experiments have limited potential for causing a change in flow distribution in the core. The flow through the core is controlled by maintaining a consistent pressure drop across the core; the flow through the reactor fuel element is proportional to the core pressure drop. Maintaining the pressure drop provides assurance that flow through the fuel elements is essentially unaffected by loading changes in the other parts of the core.

The accident analyses of the PWL facilities and experiments in Chapter 15 (Accident Analyses) provide reactivity transients that can be used to envelop potential effects from the capsule facilities and experiments. The PWL reactivity insertion accidents have been fully analyzed to determine the resulting power transients and margins for fuel element performance.

As part of the analyses for each capsule facility ESA, potential failures are identified and compared against the results in Chapter 15 (Accident Analyses) for the PWL facilities. Additional analyses are completed as necessary to demonstrate compliance with the ATR Plant Protection Criteria for all operating conditions.

10.3.4 Capsule Irradiation Facilities and Experiment Testing and Inspection Requirements

The capsule irradiation facilities are portions of the reactor internal structure. Routine testing and inspection requirements do not exist beyond those associated with the reactor and provided by the routine maintenance and inservice inspection programs described in Chapter 14 (Initial Test Program, Inservice Surveillance and Maintenance).

Routine testing and inspection of capsule experiments include visual and dimensional inspections. However, following the review of the sponsor's data package by the Contractor, additional independent nondestructive examinations may be performed, as necessary, to confirm the integrity of the outer capsule. These additional tests and inspections may include helium leak tests, radiography, and ultrasonic or liquid penetrant tests on the capsule.

10.3.5 Specific Capsule Irradiation Experiment Safety Analyses Criteria

Each capsule irradiation experiment will have an ESA as described in Section 10.1.6, reviewed and approved as described in Section 10.1.8, which addresses the General Experiment Safety Analyses Criteria in Section 10.1.7 and the specific experiment safety analyses criteria described below.

10.3.5.1 Reactivity Addition Limits. The potential reactivity addition of experiments cooled by reactor coolant must be evaluated relative to the accepted reactivity insertion events in Chapter 15 (Accident Analyses) and shown to be enveloped, or specific analyses must be completed. The evaluation must consider both the frequency of occurrence and the consequences and must be completed prior to reactor operation.

10.3.5.1.1 Comparison to Safety Analyses (Reactivity Insertion Rate)—The potential reactivity insertion rate shall not exceed the reactivity insertion rate of the limiting event in each fault category analyzed in the UFSAR without additional analyses to show acceptable consequences. Verification of compliance is required prior to reactor operation.

10.3.5.1.2 Flux Trap Cascading—Experiments in a reactor flux trap that generate significant heating and transfer the heat to the associated coolant very rapidly have the capability of adding additional positive reactivity during a power transient. This effect is known as cascading. Analyses in Chapter 15 (Accident Analyses) establish a reactivity insertion envelope for this effect. The cascading reactivities used in Chapter 15 were developed from the previous analyses of a 0.75$ step insertion (EG&G 1994). The cascade reactivity envelope as defined in Chapter 15 is 0.05$ in 0.13 seconds for Condition 2 events, 0.03$ in 0.04 seconds for Condition 3 events, and 0.17$ in 0.15 seconds for Condition 4 events. The assumed cascading becomes an envelope considered in the operation. A higher cascading reactivity insertion rate may be shown to be acceptable (usually by limiting other experiment conditions) if analyses demonstrate that conducting the experiment is within the ATR Plant Protection Criteria as discussed in Chapter 15. Verification of cascade reactivity is required prior to reactor operation.

10.3.5.1.3 Flux Trap Reactivity Feedback—The positive reactivity feedback from the flux traps was considered significant in the analyses of the PCS flow coast down event during a loss of commercial power (Chapter 15.3, Decrease in Reactor Primary Coolant Flow Rate) (Terry 1994). The reactivity feedback from the flux traps shall not exceed the values of the analyses without additional analyses to demonstrate compliance with plant protection criteria. Verification of the reactivity feedback must be completed prior to reactor operation.

10.3.5.2 Thermal-Hydraulic Criteria

10.3.5.2.1 Experiments Cooled by Reactor Primary Coolant—During reactor operation in the pressurized mode with reactor power greater than 3 MW, when reactor primary coolant is used to cool surfaces of experiments, the following thermal-hydraulic criteria are used to ensure no flow instability occurs during normal transient conditions:

A. The DNB ratio is always greater than two; or the heat flux at the hottest spot is lower, by at least three standard deviations, than the DNB heat flux computed for the condition of reactor primary coolant pumps coast down to emergency flow, assuming reactor power is initially 250 MW and a PPS scram occurs.

B. The rise in bulk reactor primary coolant temperature along the experiment hot track is less than half the value that would cause flow instability; or the highest reactor primary coolant temperature is lower, by at least three standard deviations, than the value that would cause the flow to become unstable, computed under the same condition as (i) above.

C. Any perturbation by an experiment of reactor primary coolant flow in a fuel element shall not cause the protection criteria of Chapter 15 (Accident Analyses) to be exceeded.

Verification of the thermal hydraulic criteria is required prior to reactor operation.

10.3.5.3 Gas Leakage. During reactor operation, experiments must not leak gas into the reactor such that the ATR Plant Protection Criteria specified in Chapter 15 (Accident Analyses) are exceeded.

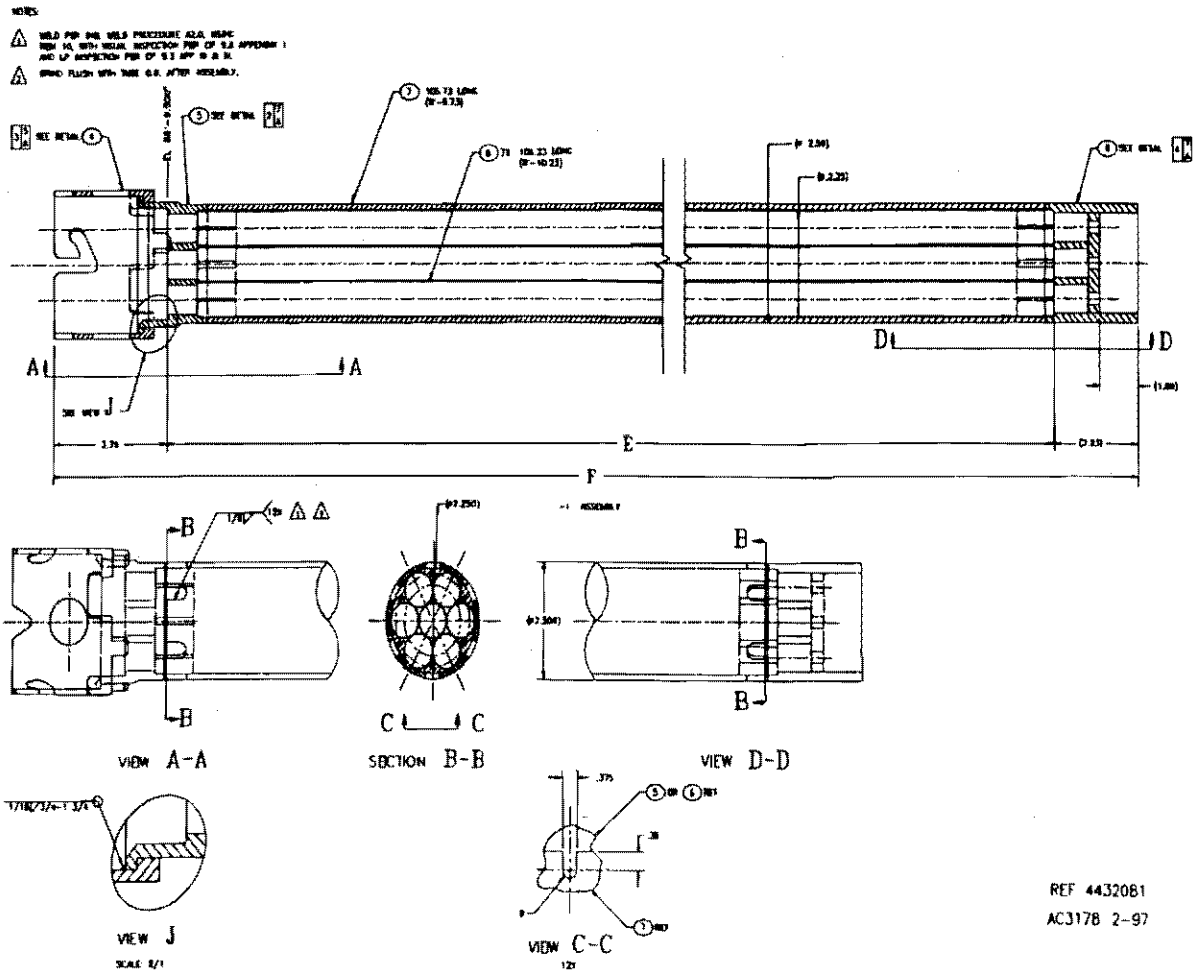

Figure 10.3-1. ATR irradiation housing assembly. **(For Information Only)**

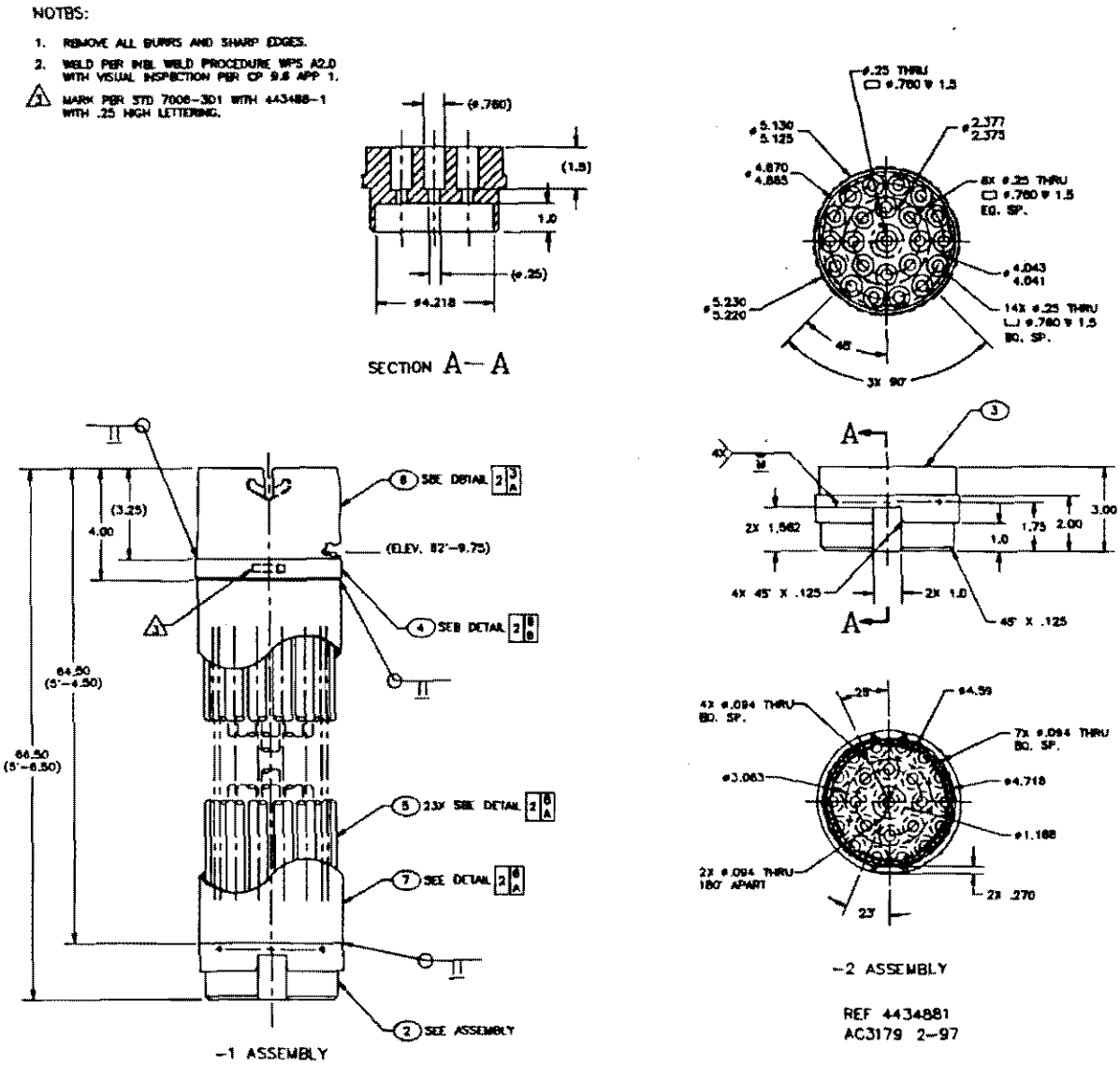

Figure 10.3-2. ATR irradiation housing assembly. **(For Information Only)**

10.4 Experiment Handling

Experiment handling involves (a) inserting and removing the experiment or experiment-related hardware (for example, IPT, capsule basket, reflector grid spacer) that adapt to and fix the experiment in a particular core or reflector position, (b) inserting and removing the experiments for transfer to other facilities for post irradiation disassembly and inspection by the irradiation program sponsor, (c) moving to and from storage of experiment or experiment hardware in the canal, or (d) assembly or disassembly of an experiment.

The following subsections discuss (a) the design function, (b) description, (c) evaluations, and (d) testing and inspection requirements associated with the equipment and procedures used to perform handling operations for the PWL and capsule irradiation experiment assemblies.

10.4.1 Experiment Handling Equipment Design Function

The design functions of the experiment handling equipment are to ensure that (a) these components are installed and removed from the reactor without damage to the reactor internals, reactor top and bottom head closure plates, and reactor biological shielding, (b) those components are installed, removed and stored in the canal without damage to the canal, and (c) to provide radiation shielding for personnel performing handling operations.

10.4.2 Experiment Handling Equipment Description

All handling operations associated with inserting and removing the components of the experiment in the reactor vessel are accomplished either from the reactor top head or reactor refueling ports. In the canal, experiments are stored, assembled, disassembled, and loaded/unloaded into shipping containers. Figure 10.4-1 provides an elevation of the reactor building showing the relative positions of the IPT assemblies, the reactor top head, loop cask transfer station, and the transfer shield plate that supports the ATR loop shielded transfer cask, which are used when handling irradiated components.

10.4.2.1 IPT and Flow Tube Assembly Handling. During removal, irradiated IPTs and flow tubes are handled in an experiment cask. Because of the length of the IPT and flow assemblies, the lower end protrudes approximately 12 ft below the bottom plate of the experiment handling cask with the cable winch at the upper end of its travel. A backup safety clamp is attached between the IPT (or flow tube) and the cask as a backup safety device in case the cask cable fails. The removed IPT (or flow tube) assembly is placed in a canal storage rack for interim storage awaiting ultimate disposal.

10.4.2.2 IPT Experiment Handling Description. The IPT experiments are normally transferred to and from the ATR in a shielded handling cask. The cask is sealed at both ends to enable wet transfer of the experiment when the test assembly contains preirradiated fuel specimens and requires cooling because of decay heat. An LDW purge station is available to ensure the experiment handling cask remains full of water during experiment handling.

IPT experiments are stored in the ATR canal in protective transfer containers called experiment "cans." IPT experiments are transferred to and from the experiment cans at the loop cask transfer station.

10.4.2.3 Capsule and Lead Experiment Handling Description. Encapsulated fuel or material experiments can be positioned in the neck shim housing, the reflector, flux trap irradiation facilities, and the outer irradiation facility by using baskets sized to adapt to the various positions as described in Section 10.1.

Capsule trains contained in the baskets are installed by using long-handled grapple tools that latch to the basket rim and are manipulated through one of the refueling ports around the upper circumference of the reactor primary vessel as shown in Figure 10.4-1.

Irradiated capsule trains are also removed with the grapple tool; however, the baskets are transferred directly to the storage canal through the drop tube located on the north side of the reactor vessel.

Instrumented lead experiments are typically inserted through a refueling port and are positioned in the reflector by the instrument lead tube. The upper end of the lead tube is threaded through a gland seal nut in one of the reactor nozzle flanges or through the reactor top or bottom head, and the lead wiring is routed to appropriate instrumentation located either in the nozzle trench or one of the main operating floor areas. Instrumented lead experiments that are installed in a flux-trap can be handled in a similar fashion as IPT experiments.

Lead experiments are removed by shortening the lead tube sufficiently to permit discharge through the drop tube to the storage canal.

10.4.3 Experiment Handling Evaluations

All experiment cask handling operations are accomplished in accordance with Detailed Operating Procedures that (a) require verbatim compliance; (b) require sign-off by personnel involved in each critical step (for example, steps involving safety and technical safety requirements) of the handling evolution; and (c) impose administrative and physical limitations (such as restrictions on maximum height and proximity to other critical equipment) on the various movements of the cask. Analyses are to be performed for cask lifts at ATR to ensure that handling operations are within the ATR Plant Protection Criteria addressed in Chapter 15 (Accident Analyses). The specific requirements of cask handling as described in Chapter 16 (Derivation of Technical Safety Requirements) will be elements of the ESA.

Various experiment handling evolutions require the use of building cranes. Formal documentation shall be available to show limits for each crane used. The document shall indicate load limits, lift heights, allowable reactor status (e.g. operating, shutdown, or defueled) and allowable status of canal storage. Verification of the required documentation is an element of the ESA.

As necessary, an assessment is also performed for operations involving irradiated components to predict the radiation levels that will be encountered while performing the procedure. This assessment dictates the requirements for any special precautions, radiological monitoring, or evacuation of personnel determined to be necessary and specified by the work control package covering the operation. The requirements are imposed to ensure the evolution can be performed within an acceptable level of exposure risk to personnel. Marts (1998) is an assessment of handling irradiated loop experiments. In addition, operations and maintenance personnel are trained and certified to perform these procedure evolutions, and are required to requalify periodically.

For fueled experiments, a minimum cooling time after shutdown will be established to ensure that melting of the experiment will not occur during handling of the experiment. For loop experiments, a minimum cooling time after shutdown of eight hours has been established (Hendrickson 1997a). If necessary, a shorter time may be supported by the ESA.

When the reactor vessel contains fuel elements, the confinement and Radiation Monitoring and Seal System shall be operable for cask handling over the reactor vessel. Verification of status is required prior to cask handling over the reactor vessel.

The ESA addresses (a) handling operations which can include assembly, disassembly, storage, and cask handling, (b) limiting fault analyses for each handling evolution, and (c) effects on the experiment during a canal draining accident and demonstrates compliance with the ATR Plant Protection Criteria for all applicable operating conditions.

10.4.4 Experiment Handling Equipment Testing and Inspection Requirements

Specialized loop and experiment handling equipment (including lifting adapters, slings, cables, fixtures, permanently mounted cranes, hoists, winches, and canal storage equipment) are included in the TRA preventative maintenance program that defines the specific testing and inspection requirements and the frequency for each equipment item. The detailed description of the TRA Maintenance Program and the *Maintenance Implementation Plan*, which defines the current status of the TRA programs relative to the applicable DOE orders and industry standards, are provided in Chapter 14 (Initial Test Program, Inservice Surveillance and Maintenance). The ESA addresses the TRA Maintenance Program for this equipment.

FOIA Exemption 3 UCNI, Exemption 7f (Page 10-78 – Experiment handling drawing)

10.5 References

ASME, 1955, *Code for Pressure Piping*, ASA B31.1 1955, American Society of Mechanical Engineers, New York, NY.

ASME, 1978, *Boiler and Pressure Vessel Code*, Section III, "Rules for Construction of Nuclear Power Plant Components," American Society of Mechanical Engineers, New York, NY.

ASME, 1989, *Rules for Inservice Inspection of Nuclear Power Plant Components, Boiler and Pressure Vessel Code, Section XI*, (1989 Edition with 1990 Addenda), American Society of Mechanical Engineers, New York, NY.

Atkinson, S. A., 1994, *Event Probability Analyses for An In-Pile Tube Gas Envelope Tube Rupture with Gas Annulus Overpressure*, EDF TRA-ATR-953, EG&G Idaho, Inc., Idaho Falls, ID, March 23, 1994.

Atkinson, S.A., 1998, *Advanced Test Reactor (ATR) Experiment Loops Leak-Before-Break Analysis for Subpile Room and Nozzle Trench Piping*, PG-T-98-002, LMITCO, Idaho Falls, ID, February 1998.

Bettis Atomic Power Laboratory, 1975, *ATR Loop Piping Design Specification*, WAPD-FD(II)-1865, Bettis Atomic Power Division, Westinghouse Electric Corporation, August 20, 1975.

Bettis Atomic Power Laboratory, 1982, *PALM Design Report*, WAPD-MT(IF)-300, Bettis Atomic Power Division, Westinghouse Electric Corporation, June 1982.

Bettis Atomic Power Laboratory, 1984a, *Operation of PALM System as a Positioner*, WAPD-MT-3748, Bettis Atomic Power Division, Westinghouse Electric Corporation, August 1984.

Bettis Atomic Power Laboratory, 1984b, *Operation of PALM System as a Positioner*, WAPD-MT-3731, Bettis Atomic Power Division, Westinghouse Electric Corporation, August 1984.

Bettis Atomic Power Laboratory, 1984c, *Operation of PALM System as a Positioner*, WAPD-MT-3738, Bettis Atomic Power Division, Westinghouse Electric Corporation, August 1984.

Bettis Atomic Power Laboratory, 1989, *Maximum Useful Capacity Holder (MUCH) Test Train System Technical Proposal*, WAPD-MT(IF)-660, Bettis Atomic Power Division, Westinghouse Electric Corporation, November 1989.

Bettis Atomic Power Laboratory, 1994, *PALM Software Change Request*, WAPD-MT(EDT)O-1043, Bettis Atomic Power Division, Westinghouse Electric Corporation, November 30, 1994.

Boodry, K. S. and M. B. Hendrickson, 1995, *Maximum Useful Capacity Holder (MUCH) Allowable Operating Temperatures in All Standard Loops and Loop 1C-W*, PG-T-91-035, Rev. 2, LMITCO, Idaho Falls, ID, December 1995

Buescher, B. J., 1994, A. L. Kologi, 1984, letter to J.E. Soleki, *ATR IPT Bowing*, ALK-12O-84, May 9, 1984, EDF-TRA-ATR-925, EG&G Idaho, Inc. Idaho Falls, ID, January 21, 1994.

Cardinal, J. J. and Mrazik, F. P., 1976, *ATR NR Loop 2C-S/2C-E Modification Instrumentation & Control System Comparison to RDT Std. C16-1T*, WAPD-FD(ID)-425, Rev. 1, Bettis Atomic Power Division, Westinghouse Electric Corporation, September 1976.

Close, J. A., 1994, *Safety Analyses Review for the Loop Operating Control System (LOCS)*, EDF TRA-ATR-904, Rev. 1, January 20, 1994.

Davidson, R. F., 1978, *ATR Reactor Vessel Seismic Analyses*, RE-A-78-038, EG&G Idaho, Inc., Idaho Falls, ID, March 2, 1978.

Durney, J. L., 1982, *Safety Analyses for Two PALM Operation*, PR-T-82-003, EG&G Idaho, Inc., Idaho Falls, ID, February 16, 1982.

Durney, J. L., 1984, *Use of the PALM for Test Positioning*, PG-T-84-013, EG&G Idaho, Inc., Idaho Falls, ID, August 1984.

Durney, J. L., 1994, *Experiment Loop Control System Assessment*, EDF TRA-ATR-1017, EG&G Idaho, Inc., Idaho Falls, ID, October 13, 1994.

Ebasco, 1963, *Naval Reactors Inpile Irradiation Test Loops in the Advanced Test Reactor*, Design Analyses Report, Ebasco Services, Inc., December 1963.

Edgett, S. M., 1986, *ATR High Temperature Loop (AHTL) In-Pile Tube Design Specification*, ES-50513-D, EG&G Idaho, Inc., Idaho Falls, ID, March 6, 1986.

EG&G Idaho, 1980a, *Piping Specification for ATR 1C-W AHTL Loop*, ES-50528 A, EG&G Idaho, Inc., Idaho Falls, ID, August 13, 1980.

EG&G Idaho, 1980b, *Piping Design for 2E-NW Loop*, ES-50638, EG&G Idaho, Inc., Idaho Falls, ID, December 2, 1980.

EG&G Idaho, 1983, *ATR Stainless Steel LIPT Specification*, ES-50535 D, EG&G Idaho, Inc., Idaho Falls, ID, February 8, 1983.

EG&G Idaho, 1988a, *Experiment Inpile Tube Facility AHTL - 1C-W Loop System Design Description*, SDD 7.9.12, EG&G Idaho, Inc., Idaho Falls, ID, January 28, 1988.

EG&G Idaho, 1988b, *ATR Standard In-Pile Tube 66MW Operation*, ES-50856A, EG&G Idaho, Inc., Idaho Falls, ID, November 1988.

EG&G Idaho, 1994, *ATR PPS and Technical Specifications Design Basis Report*, (SAR-39), Issue 030, EG&G Idaho, Inc., Idaho Falls, ID, August 2, 1994.

Goodell, R. A., 1986, *Stress Report for AHTL IPT at 50 MW Lobe Power*, PG-T-86-003, EG&G Idaho, Inc., Idaho Falls, ID, May 1986.

Harris, B. L., 1983, *Stress Analyses of Core Region for the ATR Stainless Steel LIPT*, PR-T-80-028, EG&G Idaho, Inc., Idaho Falls, ID, Revision 2, March 1983.

Harris, B. L., 1988, *Design Report for 66 MW Operation of ATR SIPT*, PG-T-88-037, EG&G Idaho, Inc., Idaho Falls, ID, November 1988.

Hendrickson, M. B., 1994, *Evaluation of the Double DPU Failure and Their Effect on the Original Experiment Protection Capabilities of the Loops*, EDF TRA-ATR-998, Rev. 1, September 22, 1994.

Hendrickson, M. B., 1995, *Maximum Allowable Operating Temperatures for the Large Inpile Tube*, PG-T-95-002, LMITCO, Idaho Falls, ID, December 1995.

Hendrickson, M. B., 1996a, *Standard In-pile Tube Maximum Allowable Operating Temperatures Accounting for All Uncertainties*, PG-T-96-001, LMITCO, Idaho Falls, ID, March 1996.

Hendrickson, M. B., 1996b, *High Temperature Fueled Gas Capsule in Loop 1C-W or 1D-N (fueled MUCH tests)*, EDF TRA-ATR-1173, October 1, 1996.

Hendrickson, M. B., 1997a, *ATR Naval Reactor's Test Handling Accident Analysis*, EDF TRA-ATR-1237, May 8, 1997.

Hendrickson, M. B., 1997b, *Evaluations of Seismic Criteria to be Used for Loop Piping Systems*, EDF TRA-ATR-1166, June 3, 1997.

Hendrickson, M. B., 1997c, *Probabilistic Risk Assessment (PRA) for ATR Experiment Loop Component/Piping Failures*, EDF TRA-ATR-1249, June 24, 1997.

Hendrickson, M. B., 1997d, *ATR Loop Restart Inspection Criteria after a Large Seismic Event (6.0 Richter Scale)*, EDF TRA-ATR-1231, June 17, 1992.

House, R. K., 1992, *Bases for Designation of Safety-Related Equipment in the ATR*, PG-T-92-114, EG&G Idaho, Inc., Idaho Falls, ID, July 1992.

ICBO, 1991, *Uniform Building Code Standards*, International Conference of Building Officials, 1991 Editors, Whitter CA. (historical)

INEEL, 1999, *System Design Description for the ATR Loop Operating Control System*, SDD 7.9.20, EG&G Idaho, Inc., Idaho Falls, ID, May 5, 1999.

INEEL, 2002, "ATR Inservice Inspection Plan Third Inspection Interval June 1994 to May 2004 (PLN-859," Rev. 4, October 15, 2002.

INEEL, 2003, *Experiment Inpile Tube Facility ALIC 2E-NW Loop System Design Description*, SDD-7.9.11, Rev. 6, March 27, 2003.

Lewis, R. J., Jr., 1990, *Sax's Dangerous Properties of Industrial Materials*, Eighth Edition (later editions may be used), Van Nostrand Reinhold, New York, New York, circa 1990.

Livingston, R. A., 1985, *Service Limits for ATR IPT*, PG-T-85-013, EG&G Idaho, Inc., Idaho Falls, ID, August 27, 1985.

Livingston, R. A., 1986, *Service Limits for AHTL IPT for 50 MW Source Power*, PG-T-86-004, EG&G Idaho, Inc., Idaho Falls, ID, June 26, 1986.

Marts, G. A., 1998, *Exposures from a Dropped Loop Experiment*, EDF TRA-ATR-1300, Rev. 1, LMITCO, Idaho Falls, ID, March 26, 1998.

McCracken, R. T., 1994, *Safety Evaluation for the Maximum Useful Capacity Holder (MUCH) Hardware in the Advanced Test Reactor*, PG-T-91-036, Rev. 1, EG&G Idaho, Inc., February 1994.

Morton, D. K., et. al., 1997a, *ATR Loop 1C-W Piping and Piping Support Stress Analyses*, LMITCO, Idaho Falls, ID, INEL/INT-97-00378, April 1997.

Morton, D. K., et. al., 1997b, *ATR Loop 1D-N Piping and Piping Support Stress Analyses*, LMITCO, Idaho Falls, ID, INEL/INT-97-00379, April 1997.

Morton, D. K., et. al., 1997c, *ATR Loop 2B-SE Piping and Piping Support Stress Analyses*, LMITCO, Idaho Falls, ID, INEL/INT-97-00380, April 1997.

Morton, D. K., et. al., 1997d, *ATR Loop 2D-SW Piping and Piping Support Stress Analyses*, LMITCO, Idaho Falls, ID, INEL/INT-97-00381, April 1997.

Morton, D. K., et. al., 1997e, *ATR Loop 2E-NW Piping and Piping Support Stress Analysis*, LMITCO, Idaho Falls, ID, INEL/INT-97-00382, April 1997.

NFPA, 2001, *Standard System for the Identification of the Hazards of Materials for Emergency Response*, NFPA 704, National Fire Protection Association, Inc., 2001.

NRC, 1973, *Development of Technical Specification for Experiments in Research Reactors*, Regulatory Guide 2.2, U.S. Nuclear Regulatory Commission, Washington, DC, November 1973.

Pace, N. E., 1987, *Overpressure Protection Report for Naval Reactors AHTL, ATR Loop 1C*, PR-T-80-036-Sup. 3, EG&G Idaho, Inc., Idaho Falls, ID, April 1987.

Pace, N. E., 1993a, *ATR Standard Loops Overpressure Protection Report*, PG-T-93-010, EG&G Idaho, Inc., Idaho Falls, ID, July 1993.

Pace, N. E., 1993b, *ATR 2E Loop Overpressure Protection Report*, PG-T-93-025, EG&G Idaho, Inc., Idaho Falls, ID, September 1993.

Penny, S. K., 1997, *Failure of Loop Operating and Control System*, SE-97-008, February 1997.

Reuter, W. G., 1988, *Fracture Mechanics of ATR with Lobe Power of 66 MW*, PG-T-88-041, EG&G Idaho, Inc., Idaho Falls, ID, November 1988.

Snow, S. D., 1998a, *Small Loop Tubing Pipe Whip Evaluation*, SDS-01-98, January 28, 1998

Snow, S. D., 1998b, *Evaluation of Experiment Loop Pipe Impact Loadings on the ATR Primary Coolant System*, EDF TRA-ATR-1271, Rev. 1, March 2, 1998.

Terry, W. K., 1994, *RELAP5 Analysis of Flow Coastdown Scenarios in the Advanced Test Reactor for the Updated Safety Analysis Report*, EDF TRA-ATR-806, EG&G Idaho, Inc., Idaho Falls, ID, April 19, 1994.

Terry, W. K., 1998, *Loop Blowdown Envelope Analyses in the Advanced Test Reactor*, INEL/INT-97-00353, Rev. 1, LMITCO, Idaho Falls, ID, April 19, 1998.

Thatcher, T. A., et el., 1994, *Update to the Advanced Test Reactor Probabilistic Risk Assessment (Level 1, 2, and 3, including Shutdown Operations)*, EGG-PRP-11229, EG&G Idaho, Inc., Idaho Falls, ID, May 1994.

INTENTIONALLY BLANK

CHAPTER 11

RADIOACTIVE AND HAZARDOUS MATERIAL WASTE MANAGEMENT

INTENTIONALLY BLANK

CONTENTS

ACRONYMS/ABBREVIATION 11-6

11. RADIOACTIVE AND HAZARDOUS MATERIAL WASTE MANAGEMENT 11-7

11.1 Waste Management Processes 11-7

11.1.1 Philosophy 11-7
11.1.2 Objectives 11-7
11.1.3 Controls 11-7
11.1.4 Waste Characterization and Pollution Prevention/Waste Minimization Programs 11-9

11.2 Waste Sources 11-10

11.3 Liquid Waste Management Systems 11-11

11.3.1 Design Bases 11-11
11.3.2 System Descriptions 11-11
11.3.3 Releases 11-15
11.3.4 Liquid Effluent Monitoring and Sampling 11-15

11.4 Gaseous Waste Management Systems 11-23

11.4.1 Design Bases 11-23
11.4.2 System Descriptions 11-23
11.4.3 Releases 11-24
11.4.4 Gaseous Effluent Monitoring and Sampling 11-24

11.5 Solid Waste Management Systems 11-27

11.5.1 Design Bases 11-27
11.5.2 Program Description 11-27
11.5.3 Waste Streams 11-27
11.5.4 Solid Waste Monitoring and Sampling 11-29

11.6 Waste Treatment Systems 11-34

11.6.1 ATR Warm Waste Treatment Facility 11-34
11.6.2 TRA Warm Waste Treatment System 11-34
11.6.3 Releases 11-34
11.6.4 Process Monitoring and Sampling 11-34

11.7 References 11-38

FIGURES

11.3-1. Advanced Test Reactor Liquid Waste Schematic Block Diagram 11-18

11.3-2. Advanced Test Reactor Warm and Hot Waste Systems 11-19

11.3-3. Test Reactor Area Hot Waste Collection System 11-20

11.3-4. Advanced Test Reactor Cold Waste System 11-21

11.3-5. Test Reactor Area Liquid Waste Disposal Ponds 11-22

11.6-1. Advanced Test Reactor Warm Waste Treatment Facility 11-36

11.6-2. Test Reactor Area Warm Waste Treatment System 11-37

TABLES

11.2-1. Primary Advanced Test Reactor waste sources 11-10

11.3-1. Design and operating parameters of the Advanced Test Reactor Warm Waste System 11-16

11.3-2. Design and operating parameters of the Advanced Test Reactor Hot Waste Collection Tank 11-16

11.3-3. Design and operating parameters of the Test Reactor Area Hot Waste Collection System .. 11-16

11.3-4. Design and operating parameters of the Advanced Test Reactor Cold Waste System 11-17

11.3-5. Annual radioactive liquid discharges to the Test Reactor Area Evaporation Pond, TRA-715 11-17

11.3-6. Design and operating parameters of the Test Reactor Area Liquid Effluent Monitoring and Sampling System 11-17

11.4-1. Design parameters of the Advanced Test Reactor Gaseous Waste Systems 11-25

11.4-2. Annual radioactive air emissions from the Advanced Test Reactor main stack with the Argon Delay Line System in operation 11-26

11.4-3. Design and operating parameters of the Advanced Test Reactor Gaseous Effluent Monitoring and Sampling Systems 11-26

11.5-1. Annual radioactive solid waste generated by TRA: Waste Experimental Reduction Facility processing 11-30

11.5-2. Annual radioactive solid waste generated by TRA: Radioactive Waste Management Complex disposal 11-31

11.5-3. Annual hazardous waste generated by TRA 11-33

11.5-4. Annual radioactive mixed waste generated by TRA 11-33

11.6-1. Design and operating parameters of the Advanced Test Reactor Warm Waste Treatment Facility 11-35

11.6-2. Design parameters of the Test Reactor Area Warm Waste Treatment System 11-35

ACRONYMS/ABBREVIATION

ATR	Advanced Test Reactor
CFR	Code of Federal Regulations
DF	Decontamination Factor
DOE	U.S. Department of Energy
DOE-ID	U.S. Department of Energy, Idaho Operations Office
EPA	U.S. Environmental Protection Agency
ERM	Effluent Radiation Monitor
HVE	Heating and Ventilating Exhaust System
HWSF	Hazardous Waste Storage Facility
I.C.	Idaho Code
IDAPA	Idaho Administrative Procedures Act
INEL	Idaho National Engineering Laboratory
INEEL	Idaho National Engineering and Environmental Laboratory
INTEC	Idaho Nuclear Technology and Engineering Center
IWTS	Integrated Waste Tracking System
PPS	plant protective system
RWMC	Radioactive Waste Management Complex
TRA	Test Reactor Area
TSDF	Treatment, Storage, and Disposal Facility
WWTF	Warm Waste Treatment Facility

11. RADIOACTIVE AND HAZARDOUS MATERIAL WASTE MANAGEMENT

11.1 Waste Management Processes

11.1.1 Philosophy

Radioactive, hazardous, and mixed wastes are required to be managed in a manner that ensures protection of the health and safety of the public, employees, and the environment. The generation, treatment, storage, transportation, and/or disposal of waste materials are required to be accomplished in a manner that prevents or minimizes the generation of such wastes and complies with all applicable federal and state regulations.

The descriptive material in this chapter includes systems/facilities/features that are not part of the Advanced Test Reactor (ATR) Facilities. A partial listing of these effluent processing systems outside of the ATR facilities include the TRA-605 Warm Waste Treatment System and Warm Waste Treatment Facility (WWTF), the Test Reactor Area (TRA) Evaporation Pond (TRA-715), the Cold Waste Pond (TRA-702), the Idaho Nuclear Technology and Engineering Center (INTEC), the Radioactive Waste Management Complex (RWMC), and various warm and hot waste storage tanks, pumps, piping, and sample locations. All portions of these effluent processing systems outside of the ATR building (TRA-670), the ATR Cooling Tower Pumphouse (TRA-671), and the ATR Main Stack (TRA-770) are not part of the ATR Facilities, and are only discussed in this UFSAR chapter for continuity of the waste stream flow paths.

11.1.2 Objectives

The objectives of the ATR waste management program are to ensure compliance with applicable guidelines and regulatory requirements, conserve resources, and eliminate or generate a minimum of waste while fulfilling the mission of the ATR. These objectives are met by following the direction and requirements of the Contractor's procedures, DOE Orders 450.1, 5400.5, 5480.4, 435.1, laws of the State of Idaho (Idaho Code (I.C.) 39-100, 39-3600, and 39-4400, and Idaho Administrative Procedures Act (IDAPA)58.01.01 and 58.01.17), and Code of Federal Regulations (40 CFR 61 Subpart H, 61 Subpart M; 191, 260, 261, 262, 263, and 761, 49 CFR 171 and 173). Refer to Chapter 19 for a complete discussion of statutes, rules, and departmental orders applicable to operation of the ATR.

11.1.3 Controls

The following subsections present the ATR facility management, operational, and training controls that are designed to ensure that applicable procedures and requirements will be followed during facility operations.

11.1.3.1 Management Controls. The Contractor's manuals establish the responsibility of managers for managing all wastes (including liquid, gaseous, or solid) to minimize health hazards, public nuisances, or pollution of the environment, and to comply with federal and state regulations, binding agreements, and the Contractor's requirements.

TRA maintenance personnel, ATR operators, and all other ATR facility personnel are required to dispose of radioactive and hazardous waste in accordance with Contractor procedures.

11.1.3.2 Operational Controls. Liquid radioactive wastes are controlled by piping systems that collect liquid wastes from various sources in the ATR (Section 11.3). Liquids are monitored, sampled, treated, and/or stored for proper disposal based on activity content and chemistry (Section 11.3.2).

Gaseous wastes are collected by the ATR ventilation system (Section 11.4), which is monitored by both a stack gas monitor (Section 11.4.4) and by safety-related radiation monitors that actuate confinement isolation (Sections 6.5 and 7.3.3).

Industrial, radioactive, mixed, and hazardous wastes are manually collected in controlled accumulation areas. Management of radioactive, mixed, and hazardous wastes are controlled by the various contractor management control procedures (MCPs). Disposal of these wastes are governed by the *Idaho National Engineering and Environmental Laboratory Waste Acceptance Criteria* (DOE-ID 2003) which identifies the requirements for characterizing, packaging, and documenting reusable property, recyclable materials, and waste to be received by INEEL or other designated facilities. Other designated facilities may have additional acceptance requirements not addressed. Such requirements will be identified by the receiving organization on a case-by-case basis.

Currently, all waste released from TRA is recorded in tracking systems.

- Solid radioactive waste is tracked by the amount shipped to the Radioactive Waste Management Complex (RWMC).
- High-level solid radioactive waste, primarily ATR spent fuel, is tracked by the amount shipped to the INTEC for storage.
- Industrial waste is tracked by the number of cubic yards (yd^3) shipped to the landfill.
- Liquid and airborne effluents are tracked daily by taking samples and performing analysis for activity and total volume.
- Hazardous waste is tracked by the amount of cubic meters (m^3) shipped from TRA.
- Mixed waste is tracked by the amount of cubic meters (m^3) shipped from TRA to an INEEL Treatment, Storage, and Disposal Facility (TSDF), or an off-site TSDF.

11.1.3.3 Training Controls. Waste training for operators and maintenance personnel includes initial and periodic review of the Contractor's *Waste Management* manuals. All personnel are required to have Pollution Prevention/Waste Minimization training. Laborers, Waste Handling Technicians, and Radiological Control Technicians also receive on-the-job training .

Refer to Chapter 13 for additional discussion of management, organization, and institutional controls related to ATR operations.

11.1.4 Waste Characterization and Pollution Prevention/Waste Minimization Programs

The waste acceptance criteria of treatment, storage, and disposal facilities accepting ATR wastes require wastes to be characterized and certified before shipment (DOE-ID 2003). Waste characterization is obtained by knowledge of the physical, radiological, and chemical characteristics of the process generating the waste, and/or by laboratory analyses of wastes. Non-containerized liquid waste characterization and disposal to TRA liquid waste ponds is approved by the TRA Waste Management Authority. Containerized waste characterization and disposal is approved by TRA Waste Generator Services.

A Pollution Prevention/Waste Minimization Program has been developed and implemented at TRA. The policy of the plan is to minimize the generation of wastes by giving preference to source reduction and environmentally sound recycling over treatment, storage, and disposal of such wastes. The program is reviewed and updated annually. Reactor Programs has established a Pollution Prevention/Waste Minimization Coordinator who is responsible for developing actions and milestones for the TRA waste minimization program.

11.2 Waste Sources

Standard operating and maintenance activities performed at the ATR facility result in generation of industrial, hazardous, mixed, and radioactive waste materials. The following sections discuss the sources and management of liquid, gaseous, and solid wastes. The sources of the various forms of wastes are summarized in Table 11.2-1, "Primary ATR waste sources."

Table 11.2-1. Primary Advanced Test Reactor waste sources.

Waste Form	Primary Source(s)
Liquid radioactive wastes (Section 11.3.2)	Primary coolant system Loop coolant systems ATR canal
Liquid nonradioactive, nonhazardous wastes (Section 11.3.4)	Cold waste drains throughout ATR Water Softener Blowdown RO Unit Concentrate Secondary coolant systems blowdown High-pressure demineralized water
Gaseous radioactive wastes (Section 11.3.4.1)	Primary coolant degassing Capsule and loop experiment offgas Liquid waste tank ventilation Laboratory hood exhausts
Gaseous nonradioactive wastes (Section 11.3.2)	Diesel exhaust
Solid radioactive wastes (Section 11.5.3.1)	Ion exchange resins Core Internal changeouts Maintenance, upgrades, primary and loop chemistry sampling, and nondestructive examination activities.
High-level solid radioactive wastes (Section 11.5.3.1)	Spent fuel elements
Mixed hazardous wastes (Solid and liquid) (Section 11.5.3.2)	Lead shielding Maintenance, upgrades and nondestructive examination activities Experiment loop decontamination

11.3 Liquid Waste Management Systems

Normal operation of the ATR results in the generation of industrial and radioactive liquid wastes. Liquid waste management systems and programs are designed and implemented to protect plant personnel, the public, and the environment by mitigating releases of liquid effluents generated during normal operations and anticipated operational occurrences. Radioactive and nonradioactive, nonhazardous liquid wastes are discussed in Sections 11.3.1 through 11.3.4. Consistent with the definition of solid waste in 40 CFR 261, mixed and hazardous wastes in liquid form are discussed in Section 11.5.3.2.

11.3.1 Design Bases

The bases for design of the ATR liquid waste management systems and programs are to provide for

- Controlled confinement of liquid wastes generated during normal operation and anticipated operational occurrences
- Reduction of the radioactivity in liquid wastes through ion exchange and holdup to allow for decay of short-lived radionuclides
- Monitoring radiation levels in waste water before discharge to the environment to verify compliance with applicable federal, state, and DOE criteria.

Specific design bases and operating parameters for each liquid waste system to implement the above general design bases are included in the following sections.

11.3.2 System Descriptions

The radioactive liquid waste disposal system is divided into subsystems based on the anticipated treatment requirements of the effluent sources supplying those subsystems. The routing of liquid waste within ATR is source-based—liquid waste flows through piping systems by gravity from the source to interim tank storage. The subsystems (cold waste, warm waste, and hot waste) allow controlled storage and sampling. Following sampling, wastes may be transferred for appropriate treatment or storage. A separate liquid waste source, the TRA Demineralizer Building (TRA-608), generates nonradioactive nonhazardous liquid waste that is discharged to the TRA sewage lagoons (TRA-735 and TRA-736). The criterion for chemical, cold, warm, and hot liquid waste, as used to specify these systems at ATR, are based on the criteria for liquid waste effluents in DOE Order 5400.5 (DOE 1993) as follows:

Cold liquid waste:	Nuclide-specific Derived Concentration Guides for drinking water of DOE Order 5400.5, Chapter III (DOE 1993).
Warm liquid waste:	<u>Before Treatment</u>:
	Total activity ≤ 1.9E-01 μCi/mL
	<u>Release to Evaporation Pond</u>:
	State of Idaho Permit To Construct 023-00001 (State of Idaho 2002)
Hot liquid waste:	Total activity > 1.9E-01 μCi/mL (above criteria for treatment in the Warm Waste Treatment System) or alpha activity ≥ 1E-04 μCi/mL

The flow of the various liquid wastes from point of generation to final disposition is illustrated in Figure 11.3-1. The warm and hot waste systems within ATR are illustrated in Figure 11.3-2. The warm and hot waste systems within the ATR and comparable systems in other TRA facilities interface with the TRA Effluent Processing Facility (TRA-605). All portions of the effluent processing system outside of the ATR building (TRA-670) and the ATR Cooling Tower Pumphouse (TRA-671) are not part of the ATR Facility, and are only discussed in this UFSAR for continuity of the waste flow paths.

In addition to providing storage of liquid wastes generated during normal operation, the ATR liquid waste systems provide reserve capacity to store radioactive liquids that, as a result of accident or plant upset, might require diversion to waste storage. In the event of a reactor accident or upset, radioactive coolant flush will first be processed through the ATR WWTF (Section 11.6.1) at up to 150 gal/min, then pumped to the TRA Warm Waste Treatment System in TRA-605 for further treatment (Section 11.6.2), released to the TRA Evaporation Pond (TRA-715), or diverted to the warm waste feed tank (Section 11.3.2.1) or to a hot waste storage tank (Section 11.3.2.3).

11.3.2.1 ATR Warm Waste System. Liquid waste enters the warm waste system from the following potentially contaminated sources:

Normal Operation

- Rod access area sump
- Canal cleaning system
- Canal drains
- Bypass demineralizer drains
- Building warm drains
- Reactor vessel upper and lower drains
- Degassing tank overflow drain
- Pipe tunnel sump
- Experiment cubicles (can also be valved to hot waste system)
- Heat exchanger sump.

Plant Upset

- Reactor Vessel Over Pressure Protection System
- Reactor Vessel Vent Valves.

A 12-in. diameter warm drain header collects the liquid waste from various sources and routes the waste water through a removable bucket-type strainer basket to the 5,000-gal warm waste tank M-28. The warm waste tank is located in a concrete shielded room directly south of the reactor at the lowest level of Building TRA-670, at a floor elevation of 21 ft below the second basement.

The tank vault is maintained at a slight negative pressure by the HVE-8 exhaust unit. Tank liquid level is measured by means of two level systems, a bubbler tube and level transmitter, and a radio frequency level transmitter. Liquid level readout is located on the Process Distributed Control System (DCS), locally at the tank, and locally at the ATR warm waste treatment facility.

A sump pit below the tank is used to collect tank and pipe leakage. Sump level is monitored, and an alarm actuates on the Process DCS if the sump level reaches 18 in.

The warm waste tank is equipped with two vertical turbine pumps (M-31 and M-32). The pump motors and packing glands are located on the motor floor. The pump shafts extend through the concrete shielding into the warm waste tank. The pump discharge lines are equipped with check valves and block valves that may be configured for routing to the ATR WWTF, recirculation back to the tank, or to a common 4-in. diameter warm drain line inside TRA-670. This line is routed through the reactor building wall and ties into the 10-in. warm liquid waste line outside TRA-670, which flows to the TRA Warm Waste Treatment System in TRA-605.

The Effluent Radiation Monitor (ERM) is an online radiation monitor which samples/monitors the warm waste effluent in accordance with the Permit to Construct for the TRA Evaporation Pond (State of Idaho 2002). The ERM has variable setpoints, which provide alarm and diversion functions for the warm waste effluent. The lowest ERM alarm setpoints warns an operator of increased activity. ERM setpoints at higher activities alarm and initiate automatic or manual effluent diversion to the TRA-605 Warm Waste Feed Tank, or the TRA-605 100,000 gallon Hot Waste Storage Tank. If alarms are received, in the manual diversion mode an operator manually diverts effluent to the appropriate waste tank and activity levels are confirmed by sample analysis. Diverted warm waste effluent is processed through the TRA-605 WWTF or an alternate cleanup system prior to entering the evaporation pond. If the diverted warm waste effluent cannot be processed and discharged to the evaporation pond, the warm waste effluent may be processed at an off-site facility.

The tank, piping, and valves in the reactor building are type 304 stainless steel. Pumps are cast iron construction with steel column pipe. The design and operating parameters of the ATR Warm Waste System are specified in Table 11.3-1.

11.3.2.2 ATR Hot Waste System. The hot waste system drains liquid waste from the following areas:

- Experiment cubicles and sample areas (can also be valved to warm waste)
- Loop high point vents.

A 6-in. diameter header collects drainage from the hot experimental drain risers and routes the water through a removable bucket-type strainer (similar to the warm waste tank) to the 1000-gal hot waste tank, M-27. Tank M-27 is located in a concrete-shielded room adjacent to the warm waste tank. The tank vault is vented by the HVE-8 exhaust unit to maintain a slight negative pressure on the vault. The tank and tank vault sump are equipped with level instrumentation similar to that described for the warm waste tank, except the hot waste tank does not have a radio frequency level system.

Waste is removed from the tank via vertical turbine pumps M-29 and M-30. The discharge lines, equipped with check and block valves, are connected to form a 1-1/2 in. diameter hot drain header. Valving from the header recirculates the water to the Hot Waste Storage Tank, or routes the water to the TRA hot waste storage tanks, to the ATR warm waste tank, or to the TRA Warm Waste Treatment System (TRA-605) which diverts the water to the TRA Evaporation Pond, to the TRA-605 Warm Waste Feed Tank, or to a hot waste storage tank. The disposition of the waste is based on sampling results and the waste criteria reported in Section 11.1.3.2. The tank, pumps, piping, valves, and fittings are type 304L stainless steel. The design and operating parameters of the ATR Hot Waste System are specified in Table 11.3-2.

11.3.2.3 TRA Hot Waste Collection System. Hot waste from ATR is pumped from the ATR warm or hot waste tanks to liquid waste tanks in TRA-605 for storage pending disposal at the TRA evaporation pond or at an off-site facility. The total storage capacity of the TRA Hot Waste Collection System (100,000 gal) is sufficient to contain the liquid contents of the ATR primary coolant system (81,000 gal), if required. A truck loading facility is provided at TRA-613 for transport and disposal of collected waste. The TRA Hot Waste Collection System is illustrated in Figure 11.3-3. The design and operating parameters of the TRA Hot Waste Collection System are specified in Table 11.3-3.

11.3.2.4 ATR Cold Waste System. The primary sources of cold liquid waste in the ATR are as follows:

- Blowdown of the secondary coolant system
- Firewater drains
- Secondary side primary heat exchanger drains
- Diesel area drains that are routed through oil separators
- Emergency firewater injection system drains.

Four collection units (numbered 670-M-158 through 670-M-161) in TRA-670 consist of a 125-gal steel receiver tank and two pumps each. Cold waste water from ATR is routed by a 10-in. diameter cold drain pipe to the cold waste pond via manhole MH 22-C. The cold waste system also has a 418-gal tank (M-186) located in the primary pump motor corridor that receives cold waste water from several sources. This tank in turn provides suction to the cold waste drain pumps that discharge to TRA-703 and the Cold Waste Percolation Pond (TRA-702). The ATR Cold Waste System is illustrated in Figures 11.3-4 and 11.3-5. The design and operating parameters of the ATR Cold Waste System are specified in Table 11.3-4.

The cold waste effluents collect at the cold well sump (TRA-703) and sampling station (TRA-764) where they are sampled for radiological and nonradiological contaminants at various intervals. The effluents are pumped out to the Cold Waste Percolation Pond (TRA-702), which is located outside the TRA fence. Routine sampling data indicate that, during routine operation, the TRA cold waste effluent is characterized as nonradioactive, nonhazardous industrial waste water.

The diesel generator pit drain collection system includes two 1,000-gal tanks, M-48 and M-49. The Diesel Pit Drainage Holdup tanks alleviate flooding in the diesel pit and retard potentially oily water from entering the cold waste system. The tanks have separate inlets, but are interconnected to provide a full 2,000-gal capacity. Each drain line into the tanks has a trap to ensure building confinement. The tank contents potentially include oil liquid vapors. The traps have a water supply to keep them full. The tanks are manually drained to the cold waste collection system. Oil collected in a tank is manually pumped from the surface through a vent hole in the top of the tank and disposed of as oil/water separator waste.

11.3.3 Releases

Planned liquid effluent releases due to normal operation are discussed in the following sections. Potential consequences of accidental releases of liquid effluents are discussed in Chapter 2 (Site Characteristics).

Radiological liquid effluents at TRA are primarily the result of ATR operations. These liquid waste streams result from a canal waste water, primary coolant leakage, and activities associated with the ATR power monitoring (N-16) system (see Chapter 7, Instrumentation and Controls). This process water is treated by the ATR WWTF system (Section 11.6.1). However, this system does not remove tritium present in the waste stream. The resultant waste water, containing tritium and limited concentrations of activation and fission products below the volatile and nonvolatile release limits established by the State of Idaho (State of Idaho 2002), is released to the TRA Evaporation Pond, TRA-715. Average annual releases of predominant radionuclide and liquid discharge volumes are summarized in Table 11.3-5. The waste water discharged to the TRA Evaporation Pond, TRA-715, is below applicable requirements for nonradiological hazardous constituents.

11.3.4 Liquid Effluent Monitoring and Sampling

The liquid effluent monitoring and sampling systems within the ATR and comparable systems in other TRA facilities interface with the TRA Effluent Processing Facility (TRA-605). The monitoring and sampling systems described in this chapter and shown in Table 11.3-6 include equipment in both the ATR and TRA Effluent Processing Facilities. All portions of the effluent processing system outside of the ATR building (TRA-670) and the ATR Cooling Tower Pumphouse (TRA-671) are not part of the ATR Facility, and are only discussed in this UFSAR for continuity of the waste flow paths.

Waste water generated by ATR operations as described in Section 11.3.2 is ultimately either discharged to the TRA liquid waste ponds or is transported by tank truck to an INEEL treatment, storage, and disposal facility located at INTEC. Table 11.3-6 shows the design and operating parameters of the TRA Liquid Effluent Monitoring and Sampling Systems. A radiation monitor measures radiation levels in warm waste water prior to leaving ATR. The monitor provides a radiation level readout, a high radiation level warm waste pump trip, high radiation level annunciator, and a signal to the Reactor Data Acquisition System, described in Chapter 7. The radiation monitor, annunciator, and bypass switch are located in the Process DCS. The bypass switch may be used during upset conditions to allow rapid transfer of radioactive liquid waste to the TRA Hot Waste Collection System (Section 11.3.2.3). A totalizer is connected to the warm waste tank pump outlet to measure the volume of waste water transferred.

TRA warm waste radiological liquid effluents are monitored using a proportional sampling system in TRA-636. This system obtains a liquid sample proportional to the total flow to the Evaporation Pond. This sample is routed to a sample collecting tank that is sampled and analyzed daily to define the liquid discharges to the Evaporation Pond.

11.3.4.1 TRA Effluent to Cold Waste Pond (TRA-702). The cold waste effluent is sampled quarterly and bi-weekly from the monitoring station (TRA-764). Quarterly samples are analyzed for Federal Water Pollution Control Act of 1972 (aka Clean Water Act) priority pollutant metals and barium, anions (chloride, fluoride, nitrate, phosphate, sulfate), and total organic carbon. Bi-weekly composite samples are analyzed for conductivity, pH, and gross activity.

11.3.4.2 TRA Effluent to Evaporation Pond. To determine compliance with the TRA Evaporation Pond State of Idaho Permit To Construct (PTC) 023-00001, the effluent is sampled at the retention basin inlet sample house (TRA-636) prior to discharge to the evaporation pond. Collected samples are analyzed for gamma emitting radionuclides daily. Monthly composite samples are analyzed for gross beta and alpha emitting radionuclides.

Table 11.3-1. Design and operating parameters of the Advanced Test Reactor Warm Waste System.

Component/Parameter	Design or Operating Value
Warm Waste Tank (670-M-28)	5,000 gal
Inlet Header	12 in. ID
Warm Waste Tank Pumps (670-M-31 and -32)	125 gpm each
Outlet Line	4 in. ID
Flow to Evaporation Pond through Warm Waste Treatment System	150 gpm (design) 75 gpm (operating)
Bypass Warm Waste Treatment System	450 gpm (design) 300 gpm (operating)

Table 11.3-2. Design and operating parameters of the Advanced Test Reactor Hot Waste Collection Tank.

Component/Parameter	Design or Operating Value
Hot Waste Tank (670-M-27)	1,000 gal
Inlet Header	6 in. ID
Hot Waste Tank Pumps (670-M-29, -30)	25 gpm each
Outlet Line	1.5 in. ID

Table 11.3-3. Design and operating parameters of the Test Reactor Area Hot Waste Collection System.

Component/Parameter	Design or Operating Value
TRA Hot Waste Storage Tank	
TRA-605	100,000 gal
Liquid Waste Design Parameters pH	2.0 - 12.5

Table 11.3-4. Design and operating parameters of the Advanced Test Reactor Cold Waste System.

Component/Parameter	Design or Operating Value
Collection Header in TRA-670	10 in. ID
Local Collection Tank (670-M-186)	418 gal
Tank 670-M-186 Pumps (670-M-121 and -122)	23 gpm each
Four Collection Units (670-M-158 through -161)	125 gal each
Collection Unit Pumps (two per tank)	150 gpm each

Table 11.3-5. Annual radioactive liquid discharges to the Test Reactor Area Evaporation Pond, TRA-715.[a]

Predominant Radionuclides[b]	Average Annual Release (Curies)	Percent of Annual Release (%)
H-3	8.2E+01	96.6
Cr-51	2.0E+00	2.3
Gross Beta	4.5E-01	0.5
Co-60	3.0E-01	0.4
Total	8.5E+01	99.8

a. Annual average from analysis of daily proportional samples based on the four-year period from 1995-1998. Sample data from Radiation Measurement Laboratory monthly TRA Evaporation Pond Inlet Reports. Average volume is 5.5E+06 gal/yr (2.1E+07 liters/yr). The State of Idaho Permit to Construct for the TRA Evaporation Pond limits the annual releases to 510.9 curies of nonvolatile radionuclides (42.6 curies per month) and 324.3 Curies of volatile radionuclides (27.1 curies per month) (State of Idaho 2002).

b. Predominant radionuclides represent over 99% of the total radioactivity discharged. Other radionuclides routinely monitored and detected in smaller quantities include Na-24, Sc-46, Mn-54, Co-58, Zn-65, Zr-95, Nb-95, Ru-103, Agm-110, Sb-122, Sb-124, I-131, I-133, Cs-134, Cs-137, Ba-140, La-140, Ce-144, Hf-175, Hf-181, Ta-182, Np-239, Sr-89, Sr-90, Y-90, and Gross Alpha.

Table 11.3-6. Design and operating parameters of the Test Reactor Area Liquid Effluent Monitoring and Sampling System.

Component/Parameter	Design or Operating Value
Warm Waste Effluent System	
Sample Tank	66 gal
Sampling Interval	Proportional with daily analysis
Cold Waste Effluent System	
Cold Waste Disposal Sump Flow Recorders	1,300 gpm maximum
Sampling Interval	Quarterly (non-radiological), Weekly (pH, conductivity), Biweekly (radiological)

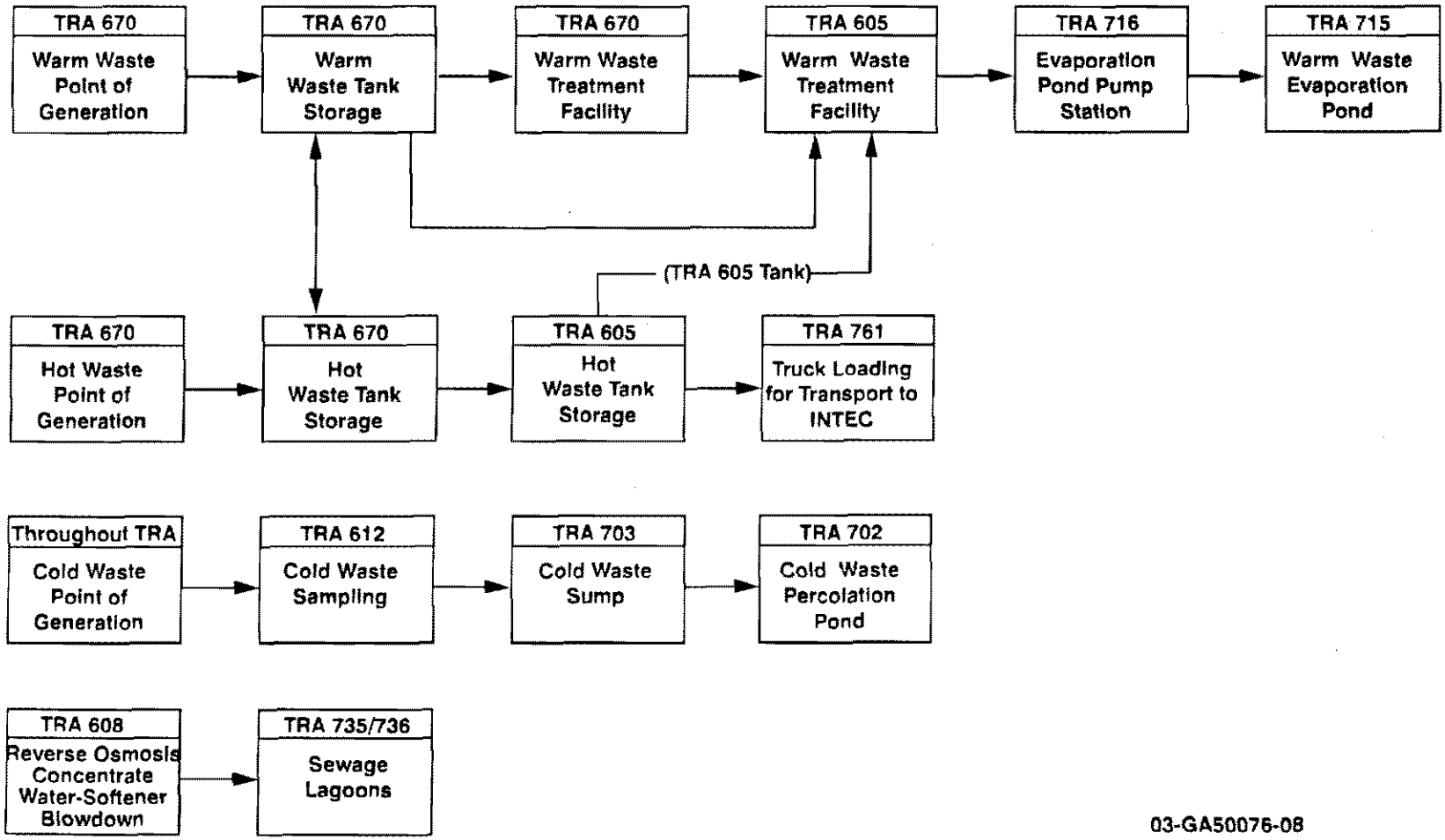

Figure 11.3-1. Advanced Test Reactor Liquid Waste Schematic Block Diagram. **(For Information Only)**

CHAPTER 11 – RADIOACTIVE AND HAZARDOUS MATERIAL WASTE MANAGEMENT - UPGRADED FINAL SAFETY ANALYSIS REPORT FOR THE ADVANCED TEST REACTOR	**Identifier:** SAR-153 **Revision:** 9 **Page:** 11-20 of 11-38 **Effective Date:** 08/10/04

FOIA Exemption 3 UCNI, Exemption 7f (Pages 11-19 – 11-20 – Hot Waste System Drawings)

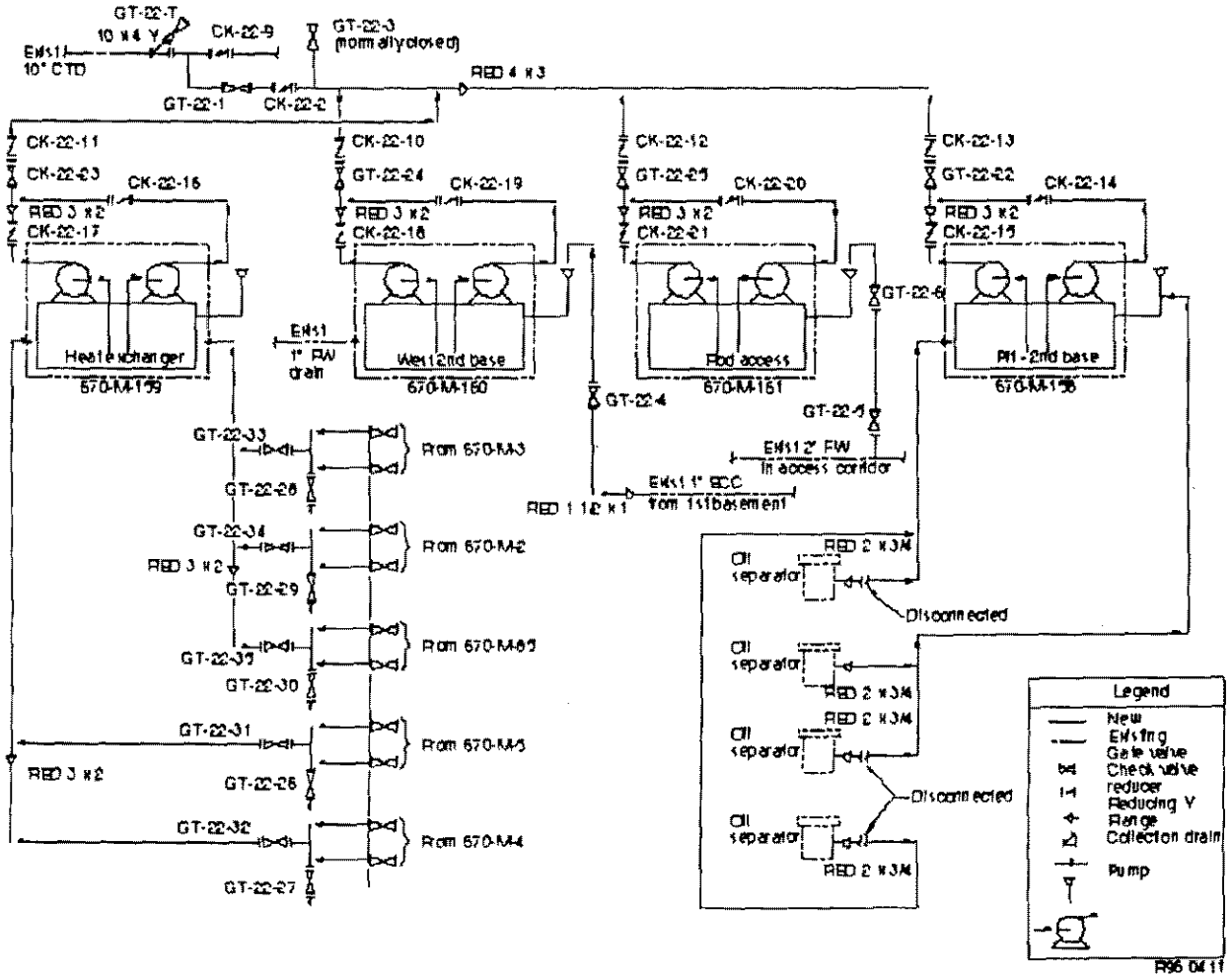

Figure 11.3-4. Advanced Test Reactor Cold Waste System. (P&ID 170458) **(For Information Only)**

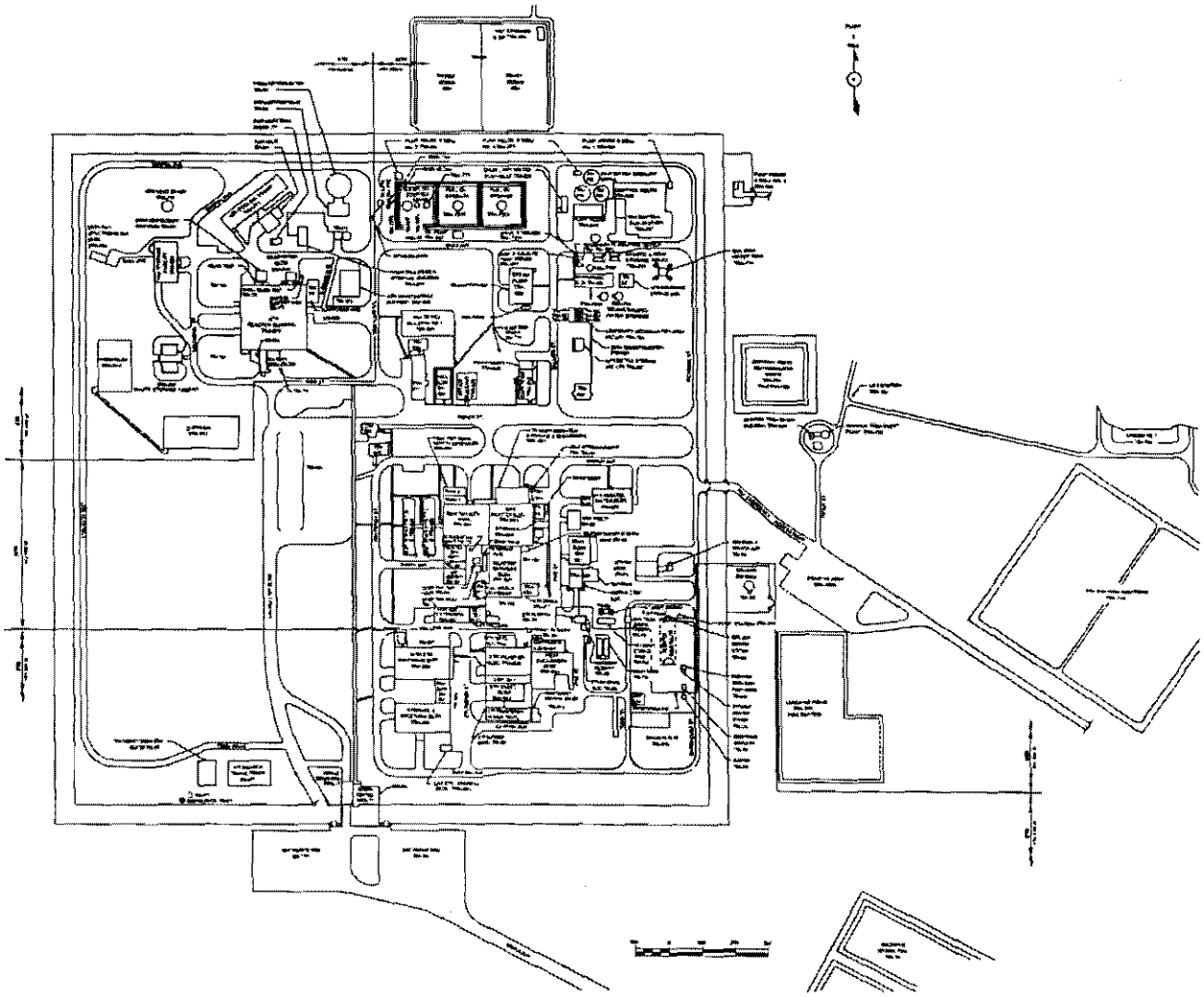

Figure 11.3-5. Test Reactor Area Liquid Waste Disposal Ponds. (Dwg. 414487) **(For Information Only)**

11.4 Gaseous Waste Management Systems

Normal operation of the ATR results in generation and release of radioactive gases and particulates to the atmosphere due to (a) leakage of fission products from reactor fuel or experiments, (b) activation of stable isotopes in the neutron flux of the reactor core, and (c) gaseous effluents from laboratory activities. The gaseous waste management systems are required to be designed to protect plant personnel, the public, and the environment by mitigating releases of radioactive gases generated during normal operations. The ATR main stack action levels are based upon exceeding annual gaseous effluent normals, and can be found in Chapter 12 (Radiation Protection). The Application for a Title V Operating Permit for the Idaho National Engineering and Environmental Laboratory Volume VIII Test Reactor Area (BBWI 2001) lists the ATR main stack, laboratory ventilation hood stacks, the ATR cooling tower, and several diesel exhaust stacks as emission sources.

11.4.1 Design Bases

The bases for design of the ATR gaseous waste management systems provide for:

- Controlled confinement of gaseous wastes generated during normal operation
- Reduction of the radioactivity in gaseous wastes through any filtration of off-gas from laboratory hoods and through holdup to allow for decay of short-lived radionuclides
- Monitoring radiation levels in waste gases before discharging them to the environment to verify compliance with applicable federal, state, and DOE criteria
- Release of gases at elevations to maximize atmospheric dispersion of effluents.

The design parameters of the gaseous waste systems are specified in Table 11.4-1.

11.4.2 System Descriptions

Radioactive gaseous wastes generated during operation of the ATR facility are managed by ventilation systems that collect gases at or near their generation point for ultimate disposal to the atmosphere. Gases are routed from low to high contamination areas to minimize spread of radionuclides to clean areas. Chapter 9 (Auxiliary Systems), Section 4, "Air Conditioning, Heating, Cooling, and Ventilation Systems," describes the entire ATR ventilation system, including schematic drawings for illustration. Portions of the ventilation system are safety-related to allow a delayed release of radionuclides after a predetermined setpoint is exceeded. The safety-related portion of the system is described in Chapter 7 (Instrumentation and Controls) on the Radiation Monitoring and Seal Activation System.

The Argon Delay Line System is installed in the ventilation flow path between the degassing tank and the ATR main stack. The purpose of the Argon Delay Line system is to reduce the quantity of short-lived radionuclides released from the main stack. The system provides a large hold tank volume which permits decay of short-lived radionuclides released by the degassing process. The system is normally in operation, but can be bypassed. The Argon Delay Line System reduces the inventory of Argon-41 released from the ATR main stack by approximately 40 percent. The four butterfly isolation valves connected to RMS-1 (i.e., the supply, return, condensate return, and bypass) and the associated piping which penetrates the ATR building are safety-related. All other portions of the Argon Delay Line System are nonsafety-related.

11.4.3 Releases

11.4.3.1 Radioactive. The primary source of radioactive gaseous effluent at ATR is from degassing of primary coolant. (The Primary Coolant System Degassing Subsystem is described in Chapter 5, Reactor Coolant System, Section 4, Component and Subsystem Design.) Argon occurs naturally in air and water and becomes activated in the neutron flux surrounding the reactor. Table 11.4-2 summarizes average annual radioactive air emissions from the ATR stack. Normal gaseous effluent releases for the ATR main stack are established annually. Tritium releases from the ATR stack are not continuously monitored. Tritium releases are calculated based on primary coolant water tritium concentrations and primary coolant water makeup.

11.4.3.2 Nonradioactive. ATR operates diesel generators as a primary source of electrical power during all operating conditions and some shutdown conditions. The diesel exhaust is a source of nonradioactive gaseous pollutants. Several other diesels at the TRA site are tested periodically to demonstrate operability which contributes to this gaseous release.

11.4.4 Gaseous Effluent Monitoring and Sampling

The ATR Stack (TRA-770) is the final release point for gaseous waste generated in ATR (Section 11.4.3.1). Table 11.4-3 shows the design and operating parameters of the ATR Gaseous Effluent Monitoring and Sampling Systems. Effluents to the stack are continuously monitored by two systems: (a) the Plant Protective System (PPS) Stack Exhaust Monitors, and (b) the ATR Stack Effluent Monitoring Subsystem. The PPS monitoring system is safety-related, and causes automatic actuation for closure of the confinement dampers when gross gamma radiation readings in the stack exhaust exceed the pre-determined trip point. The PPS Stack Exhaust Monitoring System is described in Chapters 7 (Instrumentation and Controls) and 9 (Auxiliary Systems).

Stack effluents are monitored using a self-contained radiation detection system called a SPING (i.e., System Particulate, Iodine and Nobel gases). Gaseous and particulate effluents are normally discharged through the stack. The SPING is configured to monitor, record, and alarm on noble gases, iodine, and particulate stack release rates separately. The Stack Effluent Real Time Monitor also provides continuous online monitoring and isotopic analysis of stack effluents. Manual sampling and laboratory analyses are also available.

The stack monitor is equipped with software and hardware to offer a continuous exchange of messages and/or data to control terminals and to the Reactor Data Acquisition System described in Chapter 7 (Instrumentation and Controls). The system provides the capability to store continuous monitoring data and to generate reports of effluent records. Due to the quantities of radioactivity that could potentially be released, samples are extracted continuously during operations and measured periodically. Elements of the monitoring program that ensure these requirements are met include:

- Filters continuously monitored via a sample probe
- Weekly counting of the collection filters and monthly analysis to determine specific radionuclides and their concentrations
- Weekly examination for trends in the emitters collected.

Table 11.4-1. Design parameters of the Advanced Test Reactor Gaseous Waste Systems.

System	Design Value
ATR Main Stack Fan Exhaust (TRA-770)	
(670-HVE-17A and -17B, one is in standby)	Flowrate = 64,800 cfm
(Stack TRA-770-001)	Height = 250 ft
ATR Laboratory Fumehood Exhausts	
Chemistry Laboratory Exhaust, Laboratory 103	Flowrate = 3,600 cfm
and 106 (670-HVE-24) (Stack TRA-670-098)	Height = 34 ft
Sample Preparation Laboratory Exhaust,	Flowrate = 1,200 cfm
Laboratory 124 (670-HVE-15)	Height = 26 ft
(Stack TRA-670-074)	
Water Laboratory Exhaust, Laboratory 131 (670-HVE-	Flowrate = 1,000 cfm
25) (Stack TRA-670-086)	Height = 48 ft
670-M-42 Diesel Generator	Rating = 2118 hp
(Stack TRA-670-046)	Flowrate = 15,000 cfm
	Height = 30 ft
670-M-43 Diesel Generator	Rating = 2118 hp
(Stack TRA-670-053)	Flowrate = 15,000 cfm
	Height = 30 ft
674-M-6 Diesel Generator	Rating = 2132 hp
(Stack TRA-674-007)	Flowrate = 13,140 cfm
	Height = 10.5 ft
ATR Cooling Tower (TRA-771)	
(Stack TRA-771-001)	Evaporative and windage losses = 1760 gpm
	Height = 20 ft
TRA Evaporation Pond (TRA-715)	
(TRA-715-001)	Evaporative losses = 10 gpm
	Surface area = 5 acres

Table 11.4-2. Annual radioactive air emissions from the Advanced Test Reactor main stack with the Argon Delay Line System in operation.[a]

Predominant Radionuclides[b]	Average Annual Release (Curies)	Percent of Annual Release (%)
Ar-41	1.46E+03	86.9
H-3[c]	1.7E+02	10.1
Xe-135	2.4E+01	1.4
Kr-88	6.9E+00	0.4
Xe-133	6.0E+00	0.4
K-85m	3.9E+00	0.2
Xe-138	3.3E+00	0.2
TOTAL	1.68E+03	99.6

a. Annual average from analysis of grab samples based on the four-year period 1995-1998. Sample data from Radiation Measurement Laboratory Monthly ATR Stack Effluent Reports. Average volume is 2.2E+10 ft^3/yr. (6.1E+08 m^3/yr).

b. Predominant radionuclides represent over 99% of the total radioactivity released. The other radionuclides routinely monitored and detected in smaller quantities include Na-24, Cr-51, Co-60, Rb-88, Rb-89, Ym-91, Tcm-99, Cs-134, Cs-137, Cs-138, Ba-139, Ba-140, La-140, Re-188, Kr-87, Xem-135, I-131, I-132, I-133, I-134, I-135, and Hg-203.

c. Reference DOE-ID 1999.

Table 11.4-3. Design and operating parameters of the Advanced Test Reactor Gaseous Effluent Monitoring and Sampling Systems.

Component/Parameter	Design or Operating Value
Main Stack Flow Rate	64,800 cfm
Sampling Interval	Continuous and/or manual daily

11.5 Solid Waste Management Systems

Solid radioactive and hazardous waste is generated as a result of normal operation and maintenance of the ATR. The primary activities generating solid waste are maintenance, chemistry control, and nondestructive examination. Other sources include filters, ion exchange resins, laboratory wastes, and non-routine waste streams resulting from facility modifications such as changeout of reactor vessel internals.

11.5.1 Design Bases

The bases for design of the ATR solid waste management systems provide for:

- A controlled confinement of solid wastes generated during normal operation and anticipated operational occurrences
- Minimization of the volume, activity level, and hazardous content of solid wastes generated through maintenance planning and "as low as reasonably achievable" (ALARA) programs
- Packaging, storage, and shipment of solid waste in a manner that complies with all applicable DOE orders and local, state, and federal regulations.

11.5.2 Program Description

Solid waste management differs from liquid and gaseous waste management in that the handling of materials is primarily manual--either contact or remote. As required by the *Idaho National Engineering and Environmental Laboratory Waste Acceptance Criteria* (DOE-ID 2003), radioactive waste is surveyed, checked for unacceptable contents, segregated as necessary, and placed in an appropriate container for storage and shipment to a treatment or disposal facility. Radioactive waste is segregated into the following types:

- Compactable waste
- Wood or metal, to be sized
- Noncompactable waste
- Remote handled radiological waste.

11.5.3 Waste Streams

The effluent waste systems within the ATR and comparable systems in other TRA facilities interface with the TRA Effluent Processing Facility (TRA-605). The waste processing facilities described here include equipment in both the ATR and TRA Effluent Processing Facilities. All portions of the effluent processing system outside of the ATR building (TRA-670) and the ATR Cooling Tower Pumphouse (TRA-671) are not part of the ATR Facility, and are only discussed in this UFSAR for continuity of the waste flow paths.

11.5.3.1 Radioactive. Demineralizer spent resin is generated by the ATR bypass demineralizer system (Chapter 5, Reactor Coolant System) by loop purification system components in all experimental water loops (Chapter 10, Experiment and Irradiation Facilities), the TRA 670 WWTF, the TRA-605 WWTF (Section 11.6), and the canal (Chapter 9, Auxiliary Systems). The ATR bypass demineralizer resin beds, when depleted, are flushed to a shielded container and drained. The mixed resin beds in the experimental loops and the Warm Waste Treatment Facilities are also flushed to shielded containers and drained. The canal contains submersed disposable ion exchange modules.

The remainder of solid radioactive wastes consists of wastes generated as a result of normal core reloads, core changeouts, maintenance, modifications, sampling, and replacements performed on the ATR plant. Such wastes may consist of tools, rags, anti-C clothing, non-hazardous metal, glass, paper, plastic, wood, and asbestos. The beryllium core reflector and other core internals require periodic replacement because of neutron radiation damage. Core internal components are temporarily stored in the ATR Canal, or are packaged and transported to the RWMC for disposal.

As discussed in Chapter 9 (Auxiliary Systems), fuel elements removed from the reactor following power operation are moved to the ATR canal for storage via the reactor vessel transfer tube. Fuel is stored in the canal to allow short-lived fission products to decay before any further handling, recycling into the reactor core or ultimate disposal. When fuel elements can no longer be recycled, the fuel element end boxes are removed in the ATR canal and sent to the RWMC for disposal. Long-term management of ATR spent fuel, a high-level radioactive waste, currently takes place at the INTEC at the INEEL.

Compactable solid waste is shipped to off-site facilities for compaction. Large metallic or wooden radioactive solid waste items may be shipped to off-site facilities for size reduction. All radiological wastes that undergo volume reduction offsite will be returned to RWMC for disposal. Radiological waste processed at off-site facilities currently are shipped back to the RWMC for disposal. In the future the waste may be shipped to some other disposal site. Table 11.5-1 summarizes average annual generation rates, predominant radionuclides, and curies for solid radioactive wastes shipped in the past to WERF or off-site facilities for incineration, compaction, and size reduction.

Radioactive solid wastes, such as spent resin, that cannot be reduced in volume are shipped directly to the RWMC for disposal in landfills or soil vaults. These wastes are classified as contact-handled or remote-handled depending on the radiation levels external to the shipping container. Table 11.5-2 summarizes the average annual generation rates, predominant radionuclides, and curies for solid radioactive wastes shipped directly to the RWMC for disposal. Implementation of the Pollution Prevention/Waste Minimization Plan at ATR has resulted in a reduced volume of noncompactible wastes through improved segregation techniques.

11.5.3.2 Hazardous and Mixed. Relatively small quantities of solid and liquid hazardous wastes are generated annually in support of ATR operations. About 300-gallons per year are generated as a result of maintenance, paint shop activities, and laboratory analyses. Hazardous wastes may also be generated on a nonroutine basis from spill cleanup activities and periodic collection and disposal of excess or out-of-date chemical inventories. ATR waste has not always been readily distinguished from other TRA waste. Table 11.5-3 summarizes average annual hazardous waste generated by TRA based on the six-year period from 1993-1998. Hazardous wastes are packaged for shipment at TRA and shipped to an INEEL treatment, storage, and disposal facility (TSDF) or directly off site to an approved TSDF. The wastes stored at the INEEL are eventually shipped off the INEEL site to an approved TSDF.

Mixed hazardous wastes are generated intermittently by ATR operations and most waste streams are small quantities (less than 55 gallons per year). The most significant mixed waste stream historically has been excess lead shielding that is radioactively contaminated. Excess lead shielding and contaminated shipping casks containing lead shielding are shipped on an irregular basis to the Mixed Waste Storage Facility or Test Area North.

Table 11.5-4 summarizes the average annual mixed waste generated by TRA based on the six-year period from 1993-1998. Mixed waste is packaged for shipment at TRA and shipped to the INEEL Mixed Waste Storage Facility, WERF Waste Storage Building (WWSB) or Radioactive Mixed Waste Staging Facility (INTEC Building CPP-1617) pending eventual treatment and/or disposal at an approved TSDF.

The experiment loops are decontaminated infrequently (every 5 to 10 years). Decontamination of a single loop may produce up to 6,000 gallons of low-level contaminated liquid waste. In the past, the decontamination solution has been processed as hot liquid waste. Future loop decontaminations may require that fifty percent of the decontamination solution be processed as mixed hazardous waste due to the dissolved metals in solution. The other fifty percent of the decontamination solution would continue to be processed as hot liquid waste.

11.5.4 Solid Waste Monitoring and Sampling

Solid waste streams are monitored and labeled as they are prepared for packaging and shipping. Waste content is specified based on knowledge of the generating processes or on sampling data.

Table 11.5-1. Annual radioactive solid waste generated by TRA: Waste Experimental Reduction Facility processing.[a]

	WERF Processing (curies)		
Radionuclide	Incineration[b]	Compaction	Size Reduction
Ba-137m	8.77E-05	7.83E-03	5.99E-03
C-14	1.22E-09	1.08E-07	8.31E-08
Co-58	2.07E-05	1.70E-03	1.27E-03
Co-60	2.00E-03	4.68E-02	3.58E-02
Cr-51	1.49E-03	4.34E-04	3.33E-04
Cs-134	3.65E-06	3.26E-04	2.49E-04
Cs-137	3.63E-04	9.05E-03	6.92E-03
Eu-152		3.33E-07	6.09E-06
Eu-154	4.96E-06	4.42E-04	3.39E-04
Eu-155	4.30E-07	3.83E-05	2.25E-05
Fe-55	1.80E-05	1.60E-03	1.23E-03
Fe-59	9.44E-07		
Hf-181	5.48E-05	1.10E-04	8.08E-05
Mn-54	4.22E-05	2.49E-03	1.91E-03
Nb-95		1.67E-07	
Ni-63	7.95E-05	7.08E-03	5.43E-03
Sb-124		3.50E-08	
Sb-125		6.67E-08	
Sc-46		9.33E-09	
Sr-90	8.23E-05	7.33E-03	5.62E-03
Ta-182	1.78E-05		
Y-90	8.23E-05	7.33E-03	5.46E-03
Zn-65	3.95E-05	3.16E-03	2.42E-03
Zr-95		1.12E-07	
		9.57E-2	7.31E-2

a. Six-year annual averages, 1993-1998. Average volumes of waste are as follows:

Integrated Waste Tracking System (IWTS)

Incineration 3.4E3 ft^3/yr

Compaction 1.1E3 ft^3/yr

Size Reduction 6.43E2 ft^3/yr

b. Radioactive waste is no longer incinerated at WERF. This type of waste is now accumulated and packaged with compactible waste.

Table 11.5-2. Annual radioactive solid waste generated by TRA: Radioactive Waste Management Complex disposal.[a]

	RWMC Disposal (curies)	
Radionuclides	Contact Handled	Remote Handled
Ag-108	5.33E-09	
Ag-108m	7.02E-08	
Ag-110m		1.07E-04
Am-241	1.20E-06	
Am-243	1.71E-09	
Ba-137	1.33E-05	
Ba-137m	1.54E-01	1.14E-04
C-14	3.60E-07	2.02E-01
Ce-141		5.10E-02
Ce-144		3.14E-01
Cm-242	4.97E-10	
Cm-244	8.73E-09	
Co-57		6.54E-03
Co-58	4.98E-01	5.49E+00
Co-60	6.45E-01	1.09E+01
Cr-51	8.87E-01	5.77E+01
Cs-134	1.66E-02	1.40E-02
Cs-137	1.56E-01	4.03E-02
Eu-152	1.63E-03	1.49E+01
Eu-154	2.59E-03	2.21E+01
Eu-155	2.52E-01	1.36E+01
Fe-55	1.32E-01	5.40E+00
Gd-153	1.01E-03	8.14E-02
H-3	6.96E+02	1.95E-01
Hf-175		8.20E-04
Hf-181	2.78E-05	8.20E+00
I-129	1.55E-08	9.40E-11
I-131		2.33E-05
Ir-192		1.76E-03
K-40	8.33E-10	
Kr-85	1.21E-04	
Kr-95	2.72E-05	
La-140		9.36E-09
Mn-54	6.23E-04	8.92E-01
Na-24		9.27E-04

Table 11.5-2. (continued).

	RWMC Disposal (curies)	
Radionuclides	Contact Handled	Remote Handled
Nb-94	4.16E-13	3.65E-03
Nb-95		2.30E-02
Ni-59	5.72E-07	2.14E-02
Ni-63	3.59E-03	2.29E+00
Np-237	9.63E-10	
Pa-234m	8.23E-06	
Pm-147	3.33E-04	1.28E-01
Po-210	1.89E-12	
Pu-238	6.03E-07	
Pu-239	1.63E-07	2.26E-03
Pu-240	1.15E-07	
Pu-241	6.57E-05	
Pu-242	8.03E-10	
Rh-103m		4.99E-03
Ru-103		5.06E-03
Rh-105	2.08E-01	
Rh-106	1.29E-09	
Ru-106	9.53E-07	
Sb-124	5.73E-02	3.30E-03
Sb-125	1.01E-06	
Sc-46		1.45E-02
Se-75		9.24E-03
Sr-90	2.16E-02	1.05E-01
Ta-182		2.07E-03
Tc-99	2.38E-08	1.45E-04
Th-228	1.89E-08	
Th-229	7.23E-10	
Th-230	8.68E-07	
Th-232	1.11E-08	
Th-234	6.26E-06	
U-233	2.06E-08	
U-234	4.4.8E-06	
U-235	2.34E-07	
U-236	7.43E-08	
U-238	1.18E-05	
W-187		6.06E-03

Table 11.5-2. (continued).

	RWMC Disposal (curies)	
Radionuclides	Contact Handled	Remote Handled
Y-90	1.39E-02	1.05E-01
Zn-65	4.46E-02	3.07E+00
Zr-95		6.15E-02
Totals	6.99E2	1.46E2

a. Six-year annual average, 1993-1998 (IWTS). Average volumes of waste are as follows:

Contact handled 1.5E3 ft^3/yr

Remote handled 1.8E2 ft^3/yr

Table 11.5-3. Annual hazardous waste generated by TRA.

Waste Stream	Annual Average[a] (m^3)
Metals contaminated neutral liquid	0.3
PCBs	1.3
labpacks (chemicals, products, wastes)	1.5
acids	4.5
caustics	1.1
material for mercury recovery	0.9
ignitable liquids/paints	8
debris contaminated with corrosives and/or metals	5.1
TOTALS	22.7

a. 6 year average, 1993-1998. (IWTS)

Table 11.5-4. Annual radioactive mixed waste generated by TRA.

Waste Stream	Annual Average[a] (m^3)
lead	4.2
metal and solvent contaminated debris	0.2
samples and lab waste	0.9
PCBs	0.2
TOTALS	5.5

a. Six-year average, 1993-1998. (IWTS)

11.6 Waste Treatment Systems

The warm liquid waste streams discussed in Section 11.3.2.1 may be treated to reduce activity levels by the ATR WWTF in TRA-670 and the TRA Warm Waste Treatment System in TRA-605. These systems are described in the following sections.

11.6.1 ATR Warm Waste Treatment Facility

The ATR WWTF is located in an enclosure in the southwest corner of the TRA-670 first basement. The ATR WWTF is designed to remove suspended and dissolved solids from low-level radioactive contaminated waste water using mixed-bed ion exchange columns. The flow of waste water is from the warm waste tank (670-M-28) through two ion exchange columns (670-M-111 and 670-M-112) that may be operated individually, in parallel, or in series. The ion exchange vessels are rubber-lined and are designed for 150 psi.

Outlet flow to the TRA Evaporation Pond, TRA-715, is monitored by a radiation monitor that provides a radiation level readout, a high radiation level warm waste pump trip, and a high-level radiation annunciator. The ATR WWTF is illustrated in Figure 11.6-1. The design and operating parameters of the ATR WWTF are specified in Table 11.6-1.

11.6.2 TRA Warm Waste Treatment System

The TRA Warm Waste Treatment System is located in the TRA-605 basement. The system is similar to the ATR WWTF in design and operation. The major components of the TRA Warm Waste Treatment System are the warm waste feed tank, four parallel waste pumps, and the TRA WWTF. Although the TRA Warm Waste Treatment System is not part of the ATR Facility, it is discussed here for continuity of the waste flow paths. During normal operation, all TRA warm waste effluent streams are routed to TRA-605 for treatment, monitoring by the ERM, and/or distribution to the evaporation pond, warm waste feed tank, or the hot waste storage tank (see Section 11.3.2). The TRA Warm Waste Treatment System is illustrated in Figure 11.6-2. The design capabilities of the TRA Warm Waste Treatment System are specified in Table 11.6-2.

11.6.3 Releases

Releases are governed by the criteria of DOE Order 5400.5 and by the State of Idaho Permit To Construct for the TRA Evaporation Pond (State of Idaho 2002). Releases of radiological and hazardous effluents are discussed for each effluent type--liquid, gaseous, and solid. Refer to the specific effluent type for detailed information on quantities and constituents released.

11.6.4 Process Monitoring and Sampling

As specified in DOE Order 5400.5, process monitoring is the collection and analysis of samples or measurements of liquid and gaseous effluents for the purposes of characterizing and quantifying radiological contaminants and demonstrating compliance with applicable standards. To meet these objectives, process monitoring at ATR is accomplished by obtaining certified samples of the process media proportional for liquid waste and in periodic grab samples for gaseous waste. Refer to the specific sections on gaseous, liquid, and solid waste stream monitoring for a process-specific discussion of monitoring and sampling systems and procedures.

Table 11.6-1. Design and operating parameters of the Advanced Test Reactor Warm Waste Treatment Facility.

Component/Parameter	Design or Operating Value
Ion Exchange Units (670-M-111, -112)	50 cubic ft each
Design Pressure	150 psi
Ion Exchange Flow Rate	150 gpm (design)
	75 gpm (normal operation)

Table 11.6-2. Design parameters of the Test Reactor Area Warm Waste Treatment System.

Component/Parameter	Design or Operating Value
Ion Exchange Flow Rate	150 gpm (design) 75 gpm (normal operation)
Inlet Waste Water Characteristics	
pH	7.6
Total Suspended Solids	1.0 ppm
Total Organic Solids	2.8 ppm
Dissolved Solids	30 ppm
Total Activity	1.9E-01 μCi/mL

CHAPTER 11 – RADIOACTIVE AND HAZARDOUS MATERIAL WASTE MANAGEMENT - UPGRADED FINAL SAFETY ANALYSIS REPORT FOR THE ADVANCED TEST REACTOR	**Identifier:** SAR-153 **Revision:** 9 **Page:** 11-37 of 11-38 **Effective Date:** 08/10/04

FOIA Exemption 3 UCNI, Exemption 7f (Pages 11-36 – 11-37 – Warm Waste System Drawings)

11.7 References

BBWI, 2001, *Application for a Title V Operating Permit for the Idaho National Engineering Laboratory, "Volume VIII-Test Reactor Area," INEEL-2000-01610, March 2001.*

Companywide Manual, *Radiation Protection.*

DOE, 1993, *Radiation Protection of the Public and the Environment*, Order 5400.5, Change 2, U.S. Department of Energy, Washington, D.C., January 7, 1993.

DOE-ID, 1999, *1998 INEEL National Emission Standard for Hazardous Air Pollutants--Radionuclides*, Annual Report, (1990/1991 Supplement), DOE/ID-10342(98), U.S. Department of Energy, Idaho Operations Office, Idaho Falls, Idaho, June 1999.

DOE-ID, 2003, *Idaho National Engineering and Environmental Laboratory Waste Acceptance Criteria*, DOE/ID-01-10381, Rev. 18, U.S. Department of Energy, Idaho Operations Office, Idaho Falls, Idaho, May 20, 2003.

State of Idaho, 2002, *Permit to Construct an Air Pollution Emitting Source*, TRA Evaporation Pond 023-00001, September 9, 2002.

CHAPTER 12

RADIOLOGICAL PROTECTION

INTENTIONALLY BLANK

CONTENTS

ACRONYMS/ABBREVIATIONS 12-6

12. RADIOLOGICAL PROTECTION 12-8

12.1 Introduction 12-8

12.2 Radiation Sources 12-16

12.2.1 Core Neutron Source 12-16
12.2.2 Core Gamma Source 12-17
12.2.3 Secondary Gamma Rays 12-18
12.2.4 Contained Radioactive Solid Sources 12-18
12.2.5 Contained Radioactive Liquid Sources 12-20
12.2.6 Contained Radioactive Gaseous Sources 12-24

12.3 Radiation Protection Design Features 12-45

12.3.1 Facility Design Features 12-45
12.3.2 Facility Arrangement 12-46

12.4 Shielding 12-50

12.4.1 Shielding Design Criteria 12-50
12.4.2 Radiation Shielding Codes 12-50
12.4.3 Radiation Source Terms 12-51
12.4.4 Reactor 12-51

12.5 Ventilation 12-66

12.5.1 Ventilation Design Philosophy 12-66
12.5.2 Confinement Areas 12-66

12.6 Dose Assessment 12-74

12.6.1 Anticipated Dose Rates 12-74
12.6.2 Exposure of ATR Facility Personnel 12-74
12.6.3 Dose Assessment Summary 12-76

12.7 Radiological Control Program 12-78

12.7.1 The ALARA Policy and Program 12-78
12.7.2 External Radiation Exposure Control 12-79
12.7.3 External Dosimetry 12-79
12.7.4 Internal Radiation Exposure Control 12-79
12.7.5 Internal Dosimetry 12-79
12.7.6 Radiological Protection Instrumentation Programs 12-80
12.7.7 Respiratory Protection Program 12-80

12.7.8 Work Place Air Monitoring 12-80
12.7.9 Radiological Monitoring and Contamination Control 12-81
12.7.10 Radiological Protection Recordkeeping 12-81
12.7.11 Radiological Area Boundaries, Posting, and Controls 12-82
12.7.12 Radiological Protection Training 12-82
12.7.13 Entry and Exit Control Program 12-82

12.8 References 12-83

FIGURES

12.1-1. Reactor cross section 12-11

12.1-2. ATR vertical section 12-12

12.1-3. Reactor Building, First Floor plan 12-13

12.1-4. Reactor Building, First Basement plan 12-14

12.1-5. Reactor Building, Second Basement plan 12-15

12.2-1. Fast- and thermal-neutron fluxes along core radial centerline 12-33

12.2-2. Fast- and thermal-neutron fluxes along core radial centerline 12-34

12.2-3. Fast- and thermal-neutron fluxes along core radial centerline 12-35

12.2-4. Fast- and thermal-neutron fluxes along core radial centerline 12-36

12.2-5. Comparison of fast flux computed by 20-group code to that scaled from Lid Tank Shield Facility data 12-37

12.2-6. Fast-neutron flux spectrum in fuel region 12-38

12.2-7. Fast-neutron flux spectrum in flux trap region 12-39

12.2-8. Fast-neutron flux spectrum in reflector region 12-40

12.2-9. Linear self-absorption coefficient for ATR core fuel region 12-41

12.2-10. Fission-product gamma ray source strengths in core versus time after shutdown 12-42

12.2-11. Equilibrium N-16 activity versus delay time after leaving bottom plenum 12-43

12.2-12. Cross section for Al-27 (n, α) Na-24 reaction 12-44

12.3-1. Confinement Area, Mezzanine Plan 12-49

12.4-1. Primary gamma dose rates along core radial centerline 12-58

12.4-2. Primary gamma dose rates along core radial centerline 12-59

12.4-3. Secondary gamma dose rates along core radial centerline 12-60

12.4-4. Secondary gamma dose rates along core radial centerline 12-61

12.4-5. Dose rates from fission products in loop trap through lead, dose point 1 ft from shield, 4-in. steel and 6-in. polyethylene shields included 12-62

12.4-6. Dose rates at outer surface of piping corridor shield from single infinite-length primary pipe 12-63

12.4-7. Dose rate from a primary pump through concrete shield wall 12-64

12.4-8. Reactor top shielding general arrangement 12-65

TABLES

12.1-1. Advanced Test Reactor original design parameters used for shielding calculations 12-10

12.2-1. ORIGEN2 calculated ATR core inventory for selected fission product species. Results are presented in curies and represent an ATR irradiation of 60 days at 250 MW 12-26

12.2-2. Fission-product gamma activity in an 800-kW test loop 12-32

12.3-1. Radiation Fields During Shutdown 12-48

12.4-1. Summary of calculated dose rates 12-56

12.4-2. Fission-product gamma activity in the test loop 12-57

12.5-1. Environmental conditions 12-73

12.6-1. Dose assessment 12-77

ACRONYMS/ABBREVIATIONS

AEC	U.S. Atomic Energy Commission
ALARA	as low as reasonably achievable
ANSI	American National Standards Institute
ATR	Advanced Test Reactor
ATRC	Advanced Test Reactor Critical Facility
B&W	Babcock and Wilcox Company
CAM	continuous air monitor
CIC	Core Internals Change-out
CFR	Code of Federal Regulations
DAC	derived air concentration
DCM	data acquisition and control modules
DOE-ID	U.S. Department of Energy, Idaho Operations Office
DRMS	digital radiation monitoring system
EDF	engineering design file
EFPD	effective full-power day
EG&G Idaho	EG&G Idaho, Inc
ETR	Engineering Test Reactor
GM	Geiger-Müller Detection System
H&V	heating and ventilating
HLRMS	High-Level Radiation Monitoring System
IEEE	Institute of Electrical and Electronic Engineers
INEEL	Idaho National Engineering and Environmental Laboratory, Inc.
INEL	Idaho National Engineering Laboratory
LMITCO	Lockheed Martin Idaho Technologies Company
MTR	Materials Test Reactor
NRC	U.S. Nuclear Regulatory Commission
ORNL	Oak Ridge National Laboratory
PCRS	primary coolant recycle system
PCS	primary coolant system
PM	portal monitor
RAM	radiation area monitor
RCT	Radiological Control Technician
RDAS	reactor data acquisition system
RH	relative humidity

RMS	radiation monitoring system
RMSS	radiation monitoring and seal system
SCS	secondary coolant system
SPING	System Particulate Iodine Noble Gas
TEDE	total effective dose equivalent
TLD	thermoluminescent dosimeter
TRA	Test Reactor Area
UFSAR	Upgraded Final Safety Analysis Report

12. RADIOLOGICAL PROTECTION

12.1 Introduction

The Advanced Test Reactor (ATR) is a high-flux, beryllium-reflected, water-cooled and -moderated test reactor incorporating unique design features. One such feature is a flux-trap core configuration affording neutron fluxes of greater than 10^{15} n/cm^2-sec to nine flux traps. From a shielding viewpoint, the reactor presents several unique features. The core materials for the fuel region are aluminum and uranium aluminide plates and water. The core configuration can be roughly visualized as four equal-radius hollow cylinders of fuel arranged symmetrically around a similar central cylinder. This configuration, shown in Figure 12.1-1, causes difficult geometry problems in treating dose rates and heating rates at intermediate distances from the core where two or more lobes contribute to the flux.

Another feature is the high fast-neutron flux in the core, which produces high values of N-16 water activation in the primary coolant. The relatively short cycle time of ATR and the resulting frequent refueling operations require particular attention to transient dose rates and the subsequent personnel exposure environment during refueling and experiment change out operations. Experience gained by Phillips Petroleum Company in the operation of the Materials Test Reactor (MTR) and the Engineering Test Reactor (ETR) indicated a definite possibility of test loop fuel specimen failure and subsequent fission-product distribution throughout the loop. The failure of a test loop specimen was considered in the test loop cubicle shielding designs.

The reactor vessel contains the core and reflector assembly and provides space and access, shown in Figure 12.1-2, for various experimental facilities. The coolant is pressurized light water, which also provides shielding during refueling and experiment-handling operations.

In addition to the experimental loop facilities and capsule test facilities in the beryllium reflector, there are two outer capsule irradiation facilities consisting of aluminum blocks 4 in. by 4 in. by 5 ft long attached to the outer wall of the core reflector tank. An internal fuel element storage facility is also provided in the vessel to reduce the shutdown time for certain operations. Two storage racks, each accommodating 12 fuel elements, are located in diametrically opposed positions in the water space between the core reflector tank and the inlet flow baffle. Shielding inside the vessel consists of two annular stainless steel thermal shields used to reduce the gamma heating in the vessel and in the concrete surrounding the vessel.

The reactor building encloses an area approximately 200 ft by 200 ft, extending 60 ft above and 60 ft below grade. The first floor is located at grade and includes the following areas: reactor area, storage canal area, utility area, general storage and laydown area, critical facility area, control rooms, the Radiological Control Office, and other offices. The first and second mezzanine floors include office areas and heating and ventilating (H&V) equipment rooms. The first and second basements are devoted to experiment cubicles and equipment; heat exchangers; demineralizers; and heating, ventilating, and electrical equipment (see Figures 12.1-3, 12.1-4, and 12.1-5).

Radiological protection of personnel at ATR has evolved from the experience gained from the operation of MTR and ETR, the two reactors that preceded ATR at the Test Reactor Area (TRA). This experience was factored into the design and operation of the reactor and has been used in the effective radiological protection of ATR operations personnel. Because both of the two preceding reactors were test reactors, experience with test trains and reactor operations provided a basis for a more efficient test train handling operation and precluded many of the operational occurrences that have taken place either in MTR or ETR.

This chapter describes the passive, active, and administrative systems that effectively protect the operations personnel from excessive radiation during normal operation and anticipated events. Examples of the passive systems that are described are the designs for reactor, cubicle, and experiment cask shielding. Active systems are the engineered protective systems such as the ventilation system, the canal water cleanup system, the Radiation Area Monitoring (RAM) system, the Continuous Air Monitoring (CAM) system, and the stack monitoring system. The administrative system is embodied in the radiological controls established for work with radioactive materials at the Idaho National Engineering and Environmental Laboratory (INEEL). In addition to the administrative radiological control program, which is briefly described at the end of this chapter, Reactor Programs has an independent safety review committee chartered to independently review the experiments being inserted into the reactor irradiation facilities or loop facilities, and to review the proposed reactor configuration and operation before each of the reactor cycles. The independent safety review committee provides the Reactor Programs with an independent review from several different and applicable disciplines.

Radiation shielding calculations were originally performed for the ATR and related facilities by Babcock and Wilcox Company (B&W) for Ebasco Services, Inc. The calculations are documented in a report, *Advanced Test Reactor Final Shielding Design Report* (Howard and Jacks 1963), and were summarized in the original *Safety Analysis Report Advanced Test Reactor*, Volume 2 (deBoisblanc and Cohen 1965). ATR original design parameters used by B&W for the radiation shielding calculations are provided in Table 12.1-1; these are not the currently approved design parameters for ATR. Material for this revised chapter are excerpted from either of the two above cited documents and are rearranged to conform with the new revised format according to DOE Order 5480.23 (DOE 1994) and U.S. Nuclear Regulatory Commission (NRC) Guide 1.70 (NRC 1978).

Table 12.1-1. Advanced Test Reactor original design parameters used for shielding calculations.

Parameter	Quantity or description
Reactor rated thermal power	250 MW
Average power density	0.954 MW/L
Maximum power density	2.8 MW/L
Axial maximum-to-average power ratio	1.40
Radial maximum-to-average power ratio	1.63
Local maximum-to-average power ratio	1.15
Combined maximum-to-average power ratio	2.61
Primary system design pressure	390 psig
Primary system operating pressure	300 psia
Primary system design temperature	240°F
Primary system inlet temperature	130°F
Total coolant flow through reactor	21.6×10^6 lb/hr
Average coolant velocity through fuel element	42.5 fps
Average coolant flow through fuel element	3.11×10^5 lb/hr
Leakage coolant flow	9.2×10^6 lb/hr
Reflector	6.7×10^6 lb/hr
Flux trap region	1.5×10^6 lb/hr
Thermal shields	1.0×10^6 lb/hr
Coolant inlet temperature	130°F
Coolant exit temperature at rated power	169°F
Core dimensions:	
Active fuel length	48 in.
Fuel spacing (center to center)	2.5 in.
Number of elements in core	40
Number of test positions	9
Fuel element:	
Metal-to-water ratio	0.8
Type	Plate
Shape of fuel region	Cored cylinder
Clad material	X8001 Al
Form of uranium	Fully enriched U-235
Number of plates per element	19
Experiment region:	
Pressure tube ID	2.125 in.
Pressure tube OD	2.530 in.
Insulation tube ID	2.635 in.
Insulation tube OD	2.875 in.
Flux trap H_2O volume fraction, A-1, A-3, A-5	1.00, 0.3, 0.4
Flux trap Al volume fraction, A-1, A-3, A-5	0.0, 0.7, 0.6
Nuclear data:	
Total fuel loading, U-235	33 kg
Effective lifetime	17 EFPD
Average U-235 burn-up in 17 days	5.4 kg

CHAPTER 12 – RADIOLOGICAL PROTECTION - UPGRADED FINAL SAFETY ANALYSIS REPORT FOR THE ADVANCED TEST REACTOR	**Identifier:** SAR-153 **Revision:** 10 **Page:** 12-11 of 12-84 **Effective Date:** 08/10/04

CHAPTER 12 – RADIOLOGICAL PROTECTION - UPGRADED FINAL SAFETY ANALYSIS REPORT FOR THE ADVANCED TEST REACTOR	**Identifier:** SAR-153 **Revision:** 10 **Page:** 12-12 of 12-84 **Effective Date:** 08/10/04

CHAPTER 12 – RADIOLOGICAL PROTECTION - UPGRADED FINAL SAFETY ANALYSIS REPORT FOR THE ADVANCED TEST REACTOR	**Identifier:** SAR-153 **Revision:** 10 **Page:** 12-13 of 12-84 **Effective Date:** 08/10/04

CHAPTER 12 – RADIOLOGICAL PROTECTION - UPGRADED FINAL SAFETY ANALYSIS REPORT FOR THE ADVANCED TEST REACTOR	**Identifier:** SAR-153 **Revision:** 10 **Page:** 12-14 of 12-84 **Effective Date:** 08/10/04

CHAPTER 12 – RADIOLOGICAL PROTECTION - UPGRADED FINAL SAFETY ANALYSIS REPORT FOR THE ADVANCED TEST REACTOR	**Identifier:** SAR-153 **Revision:** 10 **Page:** 12-15 of 12-84 **Effective Date:** 08/10/04

FOIA Exemption 3 UCNI, Exemption 7f (Pages 12-11 – 12-15 – Reactor vessel drawings and reactor building floor plans)

12.2 Radiation Sources

The radiation sources associated with the ATR consist of the core (which produces prompt neutrons, fission-product gammas, prompt gammas, secondary gammas, and delayed neutrons), and other radiation sources down to small radiation sources used for the calibration of radiation-detecting instrumentation. The greatest radiation source that is potentially releasable to the environment is the fission products of the core. In addition, the neutrons produced by the core are responsible for the activation products created in the structural material of the reactor and in the primary coolant. Radiological protection of personnel and the general public depends primarily on the containment and control of these fission products and the other radiation sources available at ATR. The discussion of this section of this chapter will begin with the reactor core and progress outward in a manner that treats the major radiation sources created by the neutron activation or the fission products that leave the fuel. Discussion will follow with respect to (a) the sources, neutron and gamma provided by the core, (b) the contained radioactive solid sources, and (c) the contained radioactive liquid sources, and will progress to (d) the contained radioactive gaseous sources. If the fission products remain in, or with, the fuel, they will be treated as a solid radioactive source because they can be handled and controlled. In the event the fission products leave the fuel and enter the primary coolant, they are more difficult to control and will be treated as liquid radioactive sources. Once the appropriate species of radioactive material has left the liquid state and, by volatilization or degassification, has become airborne, the material will be treated as a gaseous radioactive source.

12.2.1 Core Neutron Source

Fast- and thermal-neutron fluxes in the core and inside the reactor vessel were generated by the 20-group diffusion equations programmed for the B&W Electrodata digital computer. This one-dimensional multiregion calculation gives the flux as a function of space and lethargy, approximating the continuous neutron spectrum by 20 discrete lethargy groups.

The total fast and thermal fluxes resulting from calculations with the B&W Company 20-group diffusion code are shown in Figures 12.2-1 through 12.2-4 for the core midplane through the primary shield and to a distance of 245 cm from the center of the core. Although it is probable that the fluxes shown far out in the shield are somewhat overestimated by the use of diffusion theory, removal theory fluxes were not calculated because additional (structural) concrete exists between the magnetite and the pipe tunnel resulting in the flux being insignificant at the shield exterior. In the region where the thermal flux is important in the calculation of secondary gamma ray sources, the fast flux predicted by diffusion theory was independently checked by scaling up the Oak Ridge National Laboratory (ORNL) Lid Tank Shield Facility fluxes. The comparison is shown in Figure 12.2-5. The fast-neutron spectra predicted by the 20-group equations for the fuel, flux trap, and reflector regions are shown in Figures 12.2-6 through 12.2-8, respectively. Values from these three fast-flux figures are used in the discussion of the primary coolant activation.

12.2.2 Core Gamma Source

The design core gamma source was calculated for two time periods: (a) operational and (b) post-operational or shutdown periods.

12.2.2.1 Operational. Gamma rays produced in the reactor core during power operation are normally referred to as primary gamma rays. The significant sources of primary gamma rays are prompt gamma rays emitted during the fission process, capture gamma rays emitted almost instantaneously by excited nuclei after capture of thermal neutrons, fission-product gamma rays given off in decay, and inelastic-scattering gamma rays emitted by the nucleus in an inelastic scattering event. All of these sources, with one exception, are of significance in the calculation of ATR primary gamma source strengths. Inelastic scattering gamma rays are negligible in the ATR core because only a small amount of heavy material is present.

At energies of 1 MeV and above, the prompt and fission-product gamma sources were originally obtained from the expression proposed by Goldstein (1959), for energies expressed in MeV:

$$N(E) = 14.0e^{-1.1E}\ per MeV\ per\ fission. \qquad (12.2\text{-}1)$$

where N(E) is the number of gammas per MeV per fission.

Multiplying the solution of this equation in each energy interval by the fission density in the core gives the full-power source strengths. Below 1 MeV, the prompt gamma sources were computed independently from the data reported by Maienschein et al. (1958). The fission-product decay gamma rays in the energy range below 1 MeV were estimated so that the total fission product decay energy was 5.5 MeV per fission.

Absorption coefficients for the individual elements were taken from Perkins and King (1958). A plot of the linear absorption coefficient in the fuel region is shown in Figure 12.2-9 as a function of energy.

12.2.2.2 Shutdown. For periods following reactor shutdown, gamma radiation fields and gamma heating are due primarily to the gammas emitted by the decay of the fission products contained in the fuel.

The decay of long-lived (i.e., half-life longer than 1 minute) fission products constitutes the major radiation source from the reactor core after shutdown.

For the ATR parameters of 250 MW power and total fuel region volume of 262 L, the volumetric source strengths as a function of time after reactor shutdown for each of five fission-product gamma energy groups are presented in Figure 12.2-10. The energy grouping used for design and shown in Figure 12.2-10 is as follows:

Energy group	Energy limits (MeV)	Average energy (MeV)
1	0 – 0.99	0.5
2	1.0 – 1.99	1.5
3	2.0 – 2.99	2.5
4	3.0 – 3.99	3.5
5	4.0 – 4.99	4.5

To characterize the fission product inventory for 60 days operation at the design power level of 250 MW, an ORIGEN computer code run was made, using a special-purpose ATR cross-section library. The fission-product inventory, with curie values for each of the fission-product nuclides decayed to 150 days, is reproduced in Table 12.2-1.

12.2.3 Secondary Gamma Rays

Secondary gamma rays are capture gamma rays born outside the core as a result of thermal neutron capture in reflector and shield materials and internals. Consequently, the source activity for secondary gamma rays is a function of the thermal neutron flux level at the specific location being considered. In the ATR design, secondary-gamma dose rates and heat-generation rates contribute significantly to the total dose and heating rates even at locations inside the pressure vessel near the reflector because very high fluxes, which cause high secondary gamma production, exist in and near the reflector region.

The gamma-ray yields were taken from Deloume (1958), and the thermal-neutron flux profile was obtained from the 20-group diffusion program.

Resonance neutron capture in the shield region contributes no more than 10–20% to the secondary-gamma sources and was not included in the calculations.

Two methods were employed to calculate the secondary-gamma flux. One method gave the separate contributions from each source slab at each dose point chosen. The equations used in the secondary-gamma calculation were programmed for the digital computer and are shown in Appendix A of Howard and Jacks (1963).

The second method for determining the secondary-gamma flux uses a computer code for summing point sources over an annular source region [see Appendix D of Howard and Jacks (1963)]. Provisions are made in the program for axial and radial variations in the source strength.

12.2.4 Contained Radioactive Solid Sources

As previously stated, for this discussion, the ATR fuel element is considered to be the principal contained radioactive solid source. Likewise, activation products, which are generally and almost wholly contained within the structural material in which they are created, are considered to be radioactive solid sources. Moreover, they are also considered to be somewhat contained because of the inertness of the stainless steel, which contains the majority of the activation products.

Other than the ATR fuel elements, several other radioactive sources are handled at ATR, either routinely or occasionally. ATR was designed for the irradiation of capsule and loop experiments, principally for the U.S. Naval Reactor Program. Capsule experiments are used for production of isotopes for commercial industrial and medical applications. The largest isotope production programs are the iridium (Ir-192) and cobalt (Co-60) programs. These products are used for industrial radioactive sources. New isotope production programs may be inserted in the ATR. Radiation exposure due to Condition 1, 2, 3, and 4 events will be evaluated in an Experiment Safety Analysis for any new irradiation programs.

The number of capsules loaded is determined by the number of capsule positions in the reactor and the capability of producing the customer specified activity level in the various positions. The activity level is physically limited by the reactor power level, the flux level in the capsule position, and the target design. Specific experiment loadings are evaluated and documented in Experiment Safety Analyses. Section 20.2.1 discusses the sources of radionuclides at the ATR. The maximum anticipated annual

production of isotopes is listed in Table 20.2-3. The reactor and canal source terms from the isotope production programs are not significant relative to the fission product inventory, respectively, in the core fuel elements and the stored recycle fuel elements. These source terms are limited by the service limits of the TRA Hot Cells where the materials are processed and the shipping containers used to transport the materials. The inpile tube hardware and the beryllium reflector blocks, when removed from the reactor, are radiation sources due to the activation products produced. The sources routinely removed from the reactor at the present time, such as the radioactive sources produced for commercial purposes, and the spent fuel elements, are described below.

12.2.4.1 Core Fission Product Inventory (Fuel Elements). As described in Chapter 4 (Reactor), the ATR core requires 40 fuel elements for a full core loading. Assumptions made for general shielding purposes are that each fuel element generates 2.5% of the core inventory. This assumes that there is no power unbalance in the core lobes.

On the other hand, specific shielding calculations, such as for the spent fuel transfer cask, are based on a fuel element from a high-power lobe and are, therefore, conservative for an average fuel element.

12.2.4.2 Inpile Loop Experiment Fission Product Source Term. In the original shielding analysis performed for the ATR loop cubicles and loop piping (Howard and Jacks 1963), fueled loop experiments were assumed to generate 800 kW thermal of fission power. Cubicle shielding was assessed for an accidental transient source term from such a loop. The authors (Howard and Jacks 1963) considered 10% of an 800 kW experiment with infinite operation to be released within 30 seconds to the liquid volume of a 200-gallon bottom reentrant loop. The total fission-product gamma activity for this loop is shown in Table 12.2-2 as a function of energy and time after failure.

Due to the presence of fission products with short half lives, high gamma energies, and short release times, the initial direct gamma dose rate will be significantly higher than it would be a short time later. During this transient condition of short duration, a higher dose rate on the outside of the cubicle could be allowed for the term of the transient. Rather than shield to unlikely or extremely unlikely short duration transient conditions, the cubicle shielding was assessed on an integrated dose from the fission products during the first hour after a failure.

The current maximum fission power that can be generated in a loop in the ATR is 200 kW. Therefore, the values of Table 12.2-2 would be multiplied by 0.25 for a 200 kW loop experiment. In the nearly 30 years of operation of the ATR there has never been a significant release of fission products from the fuel of a loop experiment.

The shielding requirements for loop cubicles and loop piping are based on N-16 (See Section 12.4.), and were determined in a manner similar to that for the primary coolant piping. Using the calculated core exit equilibrium activity of 2.2×10^7 disintegrations/cm^3-sec and the coolant transient times to the various loop pipes, the volumetric activities of coolant in various sections of piping were calculated for use in the shielding analysis.

Computer program DER-074 was employed in the calculations in this section. A discussion of the methods of this program is found in Appendix B of Howard and Jacks (1963).

12.2.4.3 Cobalt (Co-60) Sources. High-specific-activity Co-60 production is accomplished by means of the ORNL-60 capsule irradiation program and consists of irradiating natural cobalt pellets contained in pellet holders designed to fit in capsules. The capsules are designed and constructed to be cooled by reactor process water and so that disassembly for removal of the pellets is performed in the TRA Hot Cells Facility. Upon removal from the reactor, a cobalt production capsule has a typical maximum of 53,000 Ci of Co-60 and has a contact reading of 5×10^6 R/hr depending on the capsule design, target material loading, reactor power level, duration, and core location of the irradiation. This inventory is based on assay measurements after irradiation of current capsule designs. Similar programs produce low-specific-activity and medium-specific-activity Co-60 irradiation sources.

12.2.4.4 Iridium (Ir-192) Sources. The iridium irradiation program produces Ir-192 for use as an industrial radiography source. The current target capsule design is similar to the high specific activity cobalt design discussed above. Small iridium wafers are sealed into holders that fit into capsule experiments. Upon removal from the reactor an iridium production capsule has a typical maximum of 59,000 Ci of Ir-192 and has a contact reading of 2×10^6 R/hr depending on the capsule design, target material loading, reactor power level, duration, and core location of the irradiation. This inventory is based on assay measurements after irradiation of current capsule designs.

12.2.4.5 Startup Neutron Source. The original startup neutron source for the ATR was a 5-Ci (80-g) plutonium-beryllium source. During the 1986 core internal changeout the startup neutron source was changed to an antimony gamma source. The source is required only for startup after a core-internal-changeout shutdown where the beryllium reflector is changed out. Otherwise, the beryllium of the reflector supplies sufficient neutrons for normally starting the reactor. When not in use, the startup neutron source is stored in the canal.

12.2.5 Contained Radioactive Liquid Sources

The principal liquid radioactive source at ATR is the Primary Coolant System (PCS). Cleanup and decontamination of this liquid by the demineralizers results in a solid waste that is radioactively contaminated and that is handled and disposed of according to established and approved procedures. Radioactively contaminated liquid wastes from floor drains, sink drains, and experiment cubicles are handled by the Liquid Waste Handling and Disposal System.

12.2.5.1 Primary Coolant System. The PCS is the system that contains the principal radioactive liquid source at ATR. During normal operation of ATR, the coolant exiting the core contains N-16, created by neutron irradiation of the oxygen in the coolant. The half-life of this radionuclide is short (7.35 seconds), but the relatively high production rate in the core, the relatively high velocity of the primary coolant through the coolant piping, and the high gamma energy produced by the decay of this radionuclide make this component of the activation products the principal concern for gamma shielding of the primary coolant. In addition to N-16, activation products, corroded from the structural materials of the core and fission products, constitute the PCS activity. In the event the fuel cladding is breached, the PCS has the potential for substantial radioactive contamination.

12.2.5.1.1 N-16 and Other Activation Products of the PCS—The activity of the primary coolant during operation of a water-cooled reactor is due chiefly to reactions involving the oxygen atom in H_20. Activation of impurities in the coolant and leakage of fission products from the fuel will contribute to the total activation.

Of the reactions, the major contributor to the activity is the N-l6, which decays with a 7.35-second half-life.

The high-energy spectrum in the region of interest in ATR was obtained from a multi-group diffusion theory program. The program has a cutoff energy of 10 MeV, which is based on the assumption that all neutrons having higher energies are included in the last group. Figures 12.2-6, 12.2-7, and 12.2-8 present the histograms of the neutron flux in the high-energy groups for the fuel region, flux trap, and reflector, respectively (Howard and Jacks 1963).

The calculated continuous spectrum below the cutoff energy of 10 MeV and the extrapolation of this spectrum above 10 MeV (dashed line) are shown in Figures 12.2-6, 12.2-7, and 12.2-8.

An independent check on the high-energy spectrum used a method presented in Smith and Turner (1959).

The calculated (Howard and Jacks 1963) equilibrium coolant activation is 2.2×10^7 disintegrations/cm^3-sec at 10 in. below the active core region. The decay of this activity with time is shown in Figure 12.2-11.

12.2.5.1.2 Tramp Uranium-Generated Fission Products—Minor amounts of uranium, tramp uranium, that contaminate the fuel element external surface during manufacture will generate fission products when subjected to the neutron flux during reactor operation. These fission products will be entrained in the primary coolant, with which the tramp uranium is in intimate contact. Because the tramp uranium amounts to only microgram quantities, the fission-product contamination from this source is relatively minor.

12.2.5.1.3 Fission Break Activity—Fission break activity is characterized by fission products that have escaped the fuel through minor cladding defects. Generally, this activity is constituted mainly of the volatile fission-product species, such as the noble gases and the halogens, which are able to diffuse through the fuel matrix and out of the cladding hole. Because of the quality assurance imposed on the ATR fuel, these defects have not been significant and the resulting PCS fission break activity has been minimal.

12.2.5.1.4 Activation Products of the Core Structural Components—Depending on the PCS chemistry and cleanliness, the activation products produced by neutron activation in the core structural materials will corrode and be entrained in the PCS. One of the activation products with the most radiological significance is Co-60 because of its yield and the high-energy gammas emitted from this radionuclide (5.26-year half-life). Due to the adverse impact on personnel radiation exposures, there is concerted effort to choose structural materials with a low cobalt content.

The recoil escape into the primary coolant of nuclides formed by fast neutron reactions with the aluminum-clad plate-type fuel elements constitutes a significant source of activity during operation and after shutdown. The most important fast neutron reactions are

Al-27 (n,α) Na-24

Al-27 (n,p) Mg-27

The Na-24 recoil nucleus, being the more energetic gamma-ray emitter, is the major contributor to dose rates. The Na-24 nuclide decays with a 15.1-hour half-life. Mg-27 decays with a 9.5-minute half-life.

The specific activity of the Na-24 nuclide in the primary coolant water of ATR was calculated by two methods. One method was an empirical fit to operating research reactor experience, and the other method was a theoretical approach using the energy-dependent cross section shown in Figure 12.2-12. The results obtained from the two methods with no demineralization were 1.32×10^5 disintegrations/cm^3-sec for the empirical formula and 1.27×10^5 disintegrations/cm^3-sec for the theoretical equation. With the demineralizer operating, the equilibrium activity in the coolant was calculated to be 2.41×10^4 disintegrations/cm^3-sec using the empirical correlation.

The specific activity of the Mg-27 nuclide in the primary coolant water was calculated in the same manner as the Na-24 activity. Similar assumptions were used. The Mg-27 activity was found to be less important during operation and after shutdown of the reactor, due to the shorter half-life and less energetic emission of gamma rays.

As discussed in a subsequent section of this chapter, a 10-minute decayed sample of PCS generally contains 0.05 to 0.29 μCi/mL. Because of the decay, N-16 and the other short-lived radionuclides do not contribute to this activity level; only about 3% is due to activation-product activity and the remainder is due to fission-product activity.

12.2.5.1.5 PCS Degassification System—The PCS degassification system provides an important radiological function to remove excess gaseous products from the PCS. The degassification system, described in Chapter 5 (Reactor Coolant System and Connected Systems), removes noble fission gases from the PCS. The degassing tank serves to remove gases so that bubbles will not form in any part of the primary system.

In addition to hydrogen and oxygen from radiolytic decomposition, and dissolved air from the surge tank and seal and makeup water, the system also removes argon, krypton, and xenon from the PCS, which constitute the majority of activity in the stack effluent. Removal of these fission-product components reduces the direct radiation from PCS piping.

The degassing system, when operating at maximum capacity, is capable of reducing the activity of the xenon and krypton in the coolant to 0.1 μCi/cc within 24 hours if 10% of the fuel plate gaseous fission product inventory is released to the coolant. The degassing tank gas discharge is monitored for activity.

The exhaust gasses from the degassing tank are normally routed through the Argon Delay Line System. The Argon Delay Line System is installed in the ventilation flow path between the degassing tank and the ATR main stack. The purpose of the Argon Delay Line system is to reduce the quantity of short-lived radionuclides released from the main stack. The system provides a large hold tank volume that permits decay of short-lived radionuclides released by the degassing process. The system is normally in operation, but can be bypassed. The Argon Delay Line System reduces the inventory of Argon-41 released from the ATR main stack by approximately 40 percent.

12.2.5.1.6 PCS Bypass Demineralizer System—The PCS Bypass Demineralizer subsystem also performs an important radiological function in the removal of entrained and dissolved radionuclides that would otherwise accumulate in various portions of the PCS.

During normal operation, 100 gpm of reactor primary coolant water is continuously bypassed through one demineralizer of a dual-train demineralizer system and returned to the suction side of the primary coolant pumps. The demineralizer removes both dissolved and suspended corrosion and fission products.

Under normal operating conditions, the activity levels of depleted resin beds are normally less than the values listed in 49 CFR 173.435. On rare occasions a single radionuclide may exceed these values and the resin is shipped LSA (Low Specific Activity) in an approved container.

During accident conditions resulting in damaged fuel, the resin could become heavily loaded with radionuclides. The depleted resin is not expected to exceed the class C waste criteria of 10 CFR 61.55. In this event, radiation exposure to workers is minimized by the use of standard ALARA practices, implementation of the TRA Radiological Control program, approved resin handling procedures, and the use of shielded transfer casks.

12.2.5.1.7 Controls on PCS Activity Levels—Because increased activity levels in the ATR PCS are a potential for increased personnel exposure or operational delay, controls are placed on the activity levels as defined in Peterson (1995a) to prevent them from becoming too high. To maintain the specified purity of the PCS for radioactive material, the water is circulated through and cleaned by the bypass demineralizer ion-exchange columns. The normal range of gross radioactivity (with a 10-minute decay) in the ATR primary coolant is 0.05 to 0.29 μCi/mL and is routinely controlled to be less than 2 μCi/mL. The limiting value of radioactive material in the PCS of 20 μCi/mL ensures that if primary coolant leakage into the confinement were to occur, the dose limits of 5 rem/yr total effective dose equivalent, as specified in 10 CFR 835, would not be exceeded during a 5-minute exposure while personnel evacuate that area. Calculations indicate a 500 mrem occupational exposure for an assumed primary coolant leakage of 150 gpm for 5 minutes into the confinement during operation with a fission break (cladding defect) with conservative assumptions regarding partition factor and fission product inventory (Velen 1989b). Additionally, based on examination of recent representative data, the PCS activity limit of 20 μCi/ml is not expected to be exceeded during plant maintenance on piping systems and heat exchangers.

12.2.5.1.8 Controls on SCS Activity Levels—Radioactivity can be introduced into the Secondary Coolant System (SCS) by leakage from the PCS. Radioactivity in the SCS can be released to the environment via the cooling towers. Therefore, the radioactivity of the SCS is monitored and limited consistent with limits on doses due to airborne effluent releases. The SCS radioactivity limit was established based on simple yet conservative dose calculations (Velen 1989a). Potential annual offsite and onsite doses per unit of SCS radioactivity were calculated (See Chapter 15 (Accident Analysis)). The calculations assumed continuous operation with radioactivity leaking from the PCS to the SCS and maximum SCS cooling-tower blowdown. Radioisotopic mixes representative of normal operation and operation with a fuel-element cladding defect (fission break) were considered.

12.2.5.2 ATR Canal. The ATR canal may be considered as separated into the working canal, the storage canal, and the ATR Critical (ATRC) Facility canal (Figure 12.1-3). The ATRC Facility is the subject of its own SAR and is not discussed further here. The canal divisions can be made by insertion of inflatable seal bulkheads. The working canal that adjoins the reactor is 8 ft wide x 27 ft long. The storage canal, which connects to the working canal, like the top of a T is 8 ft wide x 156 ft long. The working canal is in communication with the storage canal and has the same general activity concentration as the storage canal.

Random canal water samples during the first 6 months of 1993 show the canal water activity to consist mainly of activation products: 8.3E-5 μCi/mL Cr-51, (3); 2.2E-5 μCi/mL Co-60, (3); 1.5E-5 μCi/mL Re-188, (3); 1.6E-5 μCi/mL Zn-65, (2); 7.2E-6 μCi/mL Mo-99, (2); 7.4E-7 μCi/mL of Mn-54, (1); 6.6E-6 μCi/mL Na-24, (1). (The number in parentheses is the number of samples in which the respective radionuclides were present.) Because the water volume of the storage canal water and the working canal is 7.1E+5 gal, the activity contained in the canal is of the order of 0.4 Ci of total activity.

12.2.5.3 Experiment Loops. The experiment loop piping contains vent and drain systems that can direct activated water from the loops to collection tanks in either the warm or hot waste drain systems. Depending upon the concentration of the radioactive contaminants, the warm or hot waste system can be selected by positioning manually operated valves.

12.2.6 Contained Radioactive Gaseous Sources

At ATR there are no "contained radioactive gaseous sources" in the strict sense of the definition. However, the Contractor does have a definite policy with respect to gaseous sources that could cause internal exposures to personnel that prevents exposure rather than limits exposure. The philosophy is, to the extent possible that it is much more desirable to contain gaseous sources and prevent personnel exposures than it is to assign an internal dose to an individual. Therefore, if a system is capable of generating an airborne radioactive material concentration, the policy has been to contain the airborne material in an environment that has a negative atmospheric pressure with respect to the outside, or ambient, atmosphere. The design philosophy of exhausting air from clean to progressively more contaminated areas has been a dominant factor in the design and construction of the Contractor's facilities. Consequently, when designing facilities or projects, if during normal operation a gaseous radioactive material source were generated, that source was contained and exhausted from the vicinity of operating personnel.

12.2.6.1 Degassification System. During the operation of cleaning up the PCS, the degassification system is used to allow the gaseous components to evolve from the PCS at a pressure lower than maintained in the PCS. This evolution releases the activated noble gases dissolved in the PCS, which constitute the majority of the gaseous effluent resulting from the operation of ATR. Degassing releases about 3,000 Ci/yr, more than 99.9% of which is noble gases, which can be reduced by the Argon Delay Line System.

The Argon Delay Line System is installed in the ventilation flow path between the degassing tank and the ATR main stack. The purpose of the Argon Delay Line system is to reduce annual release of short-lived radionuclides released from the main stack. The system provides a large hold tank volume that permits decay of short-lived radionuclides released by the degassing process. The system is normally in operation, but can be bypassed. The Argon Delay Line System reduces the inventory of Argon-41 released from the ATR main stack by approximately 40 percent.

To date, there have been no significant problems concerning the diffusion of gaseous radioactive material to areas occupied by operations personnel during the normal operation of ATR. Several occurrences of incidental releases have been associated with off-normal conditions involved with loop experiments when, for example, Conax seals have failed resulting in personnel being exposed to greater-than-allowed concentrations of noble gases. These occurrences have been infrequent for operations at ATR.

12.2.6.2 PCS Leakage. Because of the activity that is normally contained in the PCS, the PCS piping is located in an area that is considered to be most probably contaminated, such as the pipe tunnel. These areas that contain PCS components are areas maintained with the greatest negative pressure with respect to areas normally occupied by personnel. The airborne activity evolving from PCS leakage is therefore "contained" and effectively exhausted from the area to prevent it from diffusing to areas normally occupied by personnel.

12.2.6.3 Loop Leakage. Loop leakage is designed so that radioactive material evolved is released into areas such as loop cubicles, where the ventilation is maintained at a negative pressure with respect to normally occupied areas. Normal gaseous leakage from the loops will be vented out of the stack.

A drain line break within one of the primary cubicles would result in about 200 gallons of contaminated loop water on the floor of the cubicle after all the steam has condensed. Some of the steam and fission product gases will be vented out of the stack. The majority of the water will drain through the cubicle floor drain, however some of the water may leak out of the cubicle through the cubicle door. The CAMs located in the operating spaces would alarm upon detection of gaseous fission products. Eventually the stack monitor of the Radiation Monitoring and Seal System (RMSS) would also alarm.

A drain line break within the pipe trench would result in the contaminated water going into one of the pipe trenches. The pipe trenches are large enough to hold the entire loop inventory. The steam would travel through the pipe trenches, chases, and corridors to a larger inaccessible area of the plant until the gaseous effluent is released out of the stack. The CAMs and RAMs would alarm. There will be minimal exposure to operating personnel, as contaminated water will be contained in the subpile room.

Table 12.2-1. ORIGEN2 calculated ATR core inventory for selected fission product species. Results are presented in curies and represent an ATR irradiation of 60 days at 250 MW.

Nuclide	SCRAM	8.0HR	1.0D	4.0D	7.0D	15.0D	30.0D	60.0D	90.0D	150.0D
H 3	2.120E+02	2.120E+02	2.120E+02	2.119E+02	2.118E+02	2.116E+02	2.111E+02	2.101E+02	2.091E+02	2.072E+02
ZN 72	1.473E+02	1.308E+02	1.030E+02	3.522E+01	1.204E+01	6.882E-01	3.215E-03	7.015E-08	1.531E-12	7.289E-22
GA 72	1.482E+02	1.450E+02	1.284E+02	4.998E+01	1.726E+01	9.890E-01	4.614E-03	1.007E-07	2.197E-12	1.046E-21
GA 73	5.057E+02	1.626E+02	1.676E+01	6.071E-04	2.200E-08	3.161E-20	0.000E+00	0.000E+00	0.000E+00	0.000E+00
GE 73M	5.057E+02	1.626E+02	1.676E+01	6.071E-04	2.200E-08	3.162E-20	0.000E+00	0.000E+00	0.000E+00	0.000E+00
GE 75	3.146E+03	5.803E+01	1.877E-02	3.694E-18	7.271E-34	0.000E+00	0.000E+00	0.000E+00	0.000E+00	0.000E+00
AS 76	9.679E+01	7.841E+01	5.145E+01	7.724E+00	1.160E+00	7.385E-03	5.634E-07	3.279E-15	1.909E-23	6.466E-40
GE 77	7.195E+03	4.409E+03	1.652E+03	1.995E+01	2.410E-01	1.850E-06	4.751E-16	3.134E-35	2.067E-54	8.996E-93
AS 77	2.053E+04	1.855E+04	1.462E+04	4.220E+03	1.168E+03	3.786E+01	6.103E-02	1.586E-07	4.120E-13	2.781E-24
SE 77M	5.170E+01	4.601E+01	3.627E+01	1.047E+01	2.898E+00	9.392E-02	1.514E-04	3.933E-10	1.022E-15	6.898E-27
GE 78	4.152E+04	9.073E+02	4.326E-01	4.879E-16	5.504E-31	0.000E+00	0.000E+00	0.000E+00	0.000E+00	0.000E+00
AS 78	4.198E+04	4.673E+03	6.768E+00	6.633E-14	3.444E-28	0.000E+00	0.000E+00	0.000E+00	0.000E+00	0.000E+00
BR 80	1.457E+00	2.006E-01	1.631E-02	2.034E-07	2.535E-12	2.118E-25	0.000E+00	0.000E+00	0.000E+00	0.000E+00
SE 81	4.313E+05	6.155E+01	5.568E-04	0.000E+00	0.000E+00	0.000E+00	0.000E+00	0.000E+00	0.000E+00	0.000E+00
SE 81M	1.385E+04	4.167E+01	3.770E-04	0.000E+00	0.000E+00	0.000E+00	0.000E+00	0.000E+00	0.000E+00	0.000E+00
BR 82	1.054E+04	9.022E+03	6.590E+03	1.603E+03	3.900E+02	8.995E+00	7.665E-03	5.565E-09	4.041E-15	2.130E-27
SE 83	4.045E+05	1.543E-01	2.210E-14	0.000E+00	0.000E+00	0.000E+00	0.000E+00	0.000E+00	0.000E+00	0.000E+00
BR 83	1.084E+06	1.146E+05	1.107E+03	9.449E-07	8.067E-16	0.000E+00	0.000E+00	0.000E+00	0.000E+00	0.000E+00
KR 83M	1.084E+06	3.001E+05	4.281E+03	4.031E-06	3.442E-15	0.000E+00	0.000E+00	0.000E+00	0.000E+00	0.000E+00
BR 84	2.036E+06	6.489E+01	5.302E-08	0.000E+00	0.000E+00	0.000E+00	0.000E+00	0.000E+00	0.000E+00	0.000E+00
KR 85	5.947E+03	5.965E+03	5.971E+03	5.969E+03	5.965E+03	5.957E+03	5.941E+03	5.910E+03	5.878E+03	5.816E+03
KR 85M	2.561E+06	7.521E+05	6.328E+04	9.202E-01	1.338E-05	1.686E-18	0.000E+00	0.000E+00	0.000E+00	0.000E+00
RB 86	3.851E+03	3.803E+03	3.710E+03	3.319E+03	2.969E+03	2.206E+03	1.263E+03	4.144E+02	1.360E+02	1.463E+01
KR 87	5.172E+06	6.676E+04	1.089E+01	9.842E-17	8.896E-34	0.000E+00	0.000E+00	0.000E+00	0.000E+00	0.000E+00
SR 87M	4.347E+00	6.022E-01	1.156E-02	2.175E-10	4.094E-18	1.025E-38	0.000E+00	0.000E+00	0.000E+00	0.000E+00
KR 88	7.319E+06	1.039E+06	2.089E+04	4.845E-04	1.123E-11	4.912E-32	0.000E+00	0.000E+00	0.000E+00	0.000E+00
RB 88	7.390E+06	1.160E+06	2.333E+04	5.410E-04	1.255E-11	5.485E-32	0.000E+00	0.000E+00	0.000E+00	0.000E+00
RB 89	9.620E+06	3.768E-03	3.662E-22	0.000E+00	0.000E+00	0.000E+00	0.000E+00	0.000E+00	0.000E+00	0.000E+00
SR 89	5.594E+06	5.571E+06	5.520E+06	5.297E+06	5.084E+06	4.555E+06	3.707E+06	2.456E+06	1.627E+06	7.140E+05
SR 90	4.657E+04	4.657E+04	4.657E+04	4.656E+04	4.655E+04	4.653E+04	4.648E+04	4.639E+04	4.630E+04	4.612E+04
Y 90	4.897E+04	4.878E+04	4.843E+04	4.742E+04	4.695E+04	4.659E+04	4.650E+04	4.642E+04	4.633E+04	4.615E+04
Y 90M	3.111E+01	5.201E+00	1.453E-01	1.482E-08	1.510E-15	3.425E-34	0.000E+00	0.000E+00	0.000E+00	0.000E+00
SR 91	1.178E+07	6.585E+06	2.049E+06	1.072E+04	5.605E+01	4.620E-05	1.808E-16	0.000E+00	0.000E+00	0.000E+00
Y 91	6.155E+06	6.167E+06	6.151E+06	5.951E+06	5.743E+06	5.224E+06	4.373E+06	3.065E+06	2.148E+06	1.055E+06
Y 91M	6.836E+06	4.184E+06	1.302E+06	6.810E+03	3.562E+01	2.935E-05	1.149E-16	0.000E+00	0.000E+00	0.000E+00

Table 12.2-1. (continued).

Nuclide	SCRAM	8.0HR	1.0D	4.0D	7.0D	15.0D	30.0D	60.0D	90.0D	150.0D
SR 92	1.207E+07	1.561E+06	2.606E+04	2.619E-04	2.632E-12	1.238E-33	0.000E+00	0.000E+00	0.000E+00	0.000E+00
Y 92	1.211E+07	5.665E+06	3.837E+05	3.511E-01	2.642E-07	1.230E-23	0.000E+00	0.000E+00	0.000E+00	0.000E+00
Y 93	1.303E+07	7.620E+06	2.541E+06	1.816E+04	1.298E+02	2.458E-04	4.579E-15	1.589E-36	5.517E-58	6.646-101
Y 94	1.258E+07	3.654E-01	2.707E-16	0.000E+00	0.000E+00	0.000E+00	0.000E+00	0.000E+00	0.000E+00	0.000E+00
ZR 95	6.391E+06	6.369E+06	6.323E+06	6.121E+06	5.925E+06	5.433E+06	4.619E+06	3.337E+06	2.411E+06	1.259E+06
NB 95	2.869E+06	2.892E+06	2.937E+06	3.125E+06	3.292E+06	3.639E+06	3.987E+06	3.940E+06	3.433E+06	2.206E+06
NB 95M	4.214E+04	4.229E+04	4.255E+04	4.296E+04	4.258E+04	4.001E+04	3.425E+04	2.476E+04	1.789E+04	9.337E+03
NB 96	2.840E+04	2.240E+04	1.393E+04	1.643E+03	1.938E+02	6.489E-01	1.483E-05	7.740E-15	4.040E-24	1.101E-42
ZR 97	1.203E+07	8.667E+06	4.496E+06	2.346E+05	1.224E+04	4.655E+00	1.801E-06	2.694E-19	4.032E-32	9.029E-58
NB 97	1.208E+07	9.295E+06	4.520E+06	2.358E+05	1.230E+04	5.016E+00	1.940E-06	2.903E-19	4.345E-32	9.729E-58
NB 97M	1.140E+07	8.209E+06	4.259E+06	2.222E+05	1.160E+04	4.409E+00	1.706E-06	2.552E-19	3.819E-32	8.552E-58
NB 98M	1.175E+07	1.856E+04	4.541E-02	0.000E+00	0.000E+00	0.000E+00	0.000E+00	0.000E+00	0.000E+00	0.000E+00
MO 99	1.247E+07	1.147E+07	9.695E+06	4.552E+06	2.137E+06	2.845E+05	6.487E+03	3.374E+00	1.754E-03	4.745E-10
TC. 99	6.010E+00	6.047E+00	6.114E+00	6.312E+00	6.405E+00	6.476E+00	6.487E+00	6.487E+00	6.487E+00	6.487E+00
TC. 99M	1.123E+07	1.074E+07	9.290E+06	4.387E+06	2.060E+06	2.740E+05	6.250E+03	3.250E+00	1.690E-03	4.571E-10
MO101	1.034E+07	1.367E-03	2.339E-23	0.000E+00	0.000E+00	0.000E+00	0.000E+00	0.000E+00	0.000E+00	0.000E+00
TC101	1.034E+07	2.400E-02	7.091E-22	0.000E+00	0.000E+00	0.000E+00	0.000E+00	0.000E+00	0.000E+00	0.000E+00
MO102	8.623E+06	8.472E-07	0.000E+00	0.000E+00	0.000E+00	0.000E+00	0.000E+00	0.000E+00	0.000E+00	0.000E+00
TC102	8.626E+06	8.540E-07	0.000E+00	0.000E+00	0.000E+00	0.000E+00	0.000E+00	0.000E+00	0.000E+00	0.000E+00
RU103	4.286E+06	4.261E+06	4.211E+06	3.994E+06	3.788E+06	3.290E+06	2.525E+06	1.487E+06	8.758E+05	3.038E+05
RH103M	3.864E+06	3.841E+06	3.797E+06	3.601E+06	3.415E+06	2.966E+06	2.276E+06	1.340E+06	7.895E+05	2.739E+05
TC104	3.925E+06	4.937E-02	6.531E-18	0.000E+00	0.000E+00	0.000E+00	0.000E+00	0.000E+00	0.000E+00	0.000E+00
RU105	2.210E+06	6.550E+05	5.385E+04	7.053E-01	9.238E-06	8.807E-19	0.000E+00	0.000E+00	0.000E+00	0.000E+00
RH105	1.478E+06	1.450E+06	1.120E+06	2.751E+05	6.706E+04	1.556E+03	1.341E+00	9.952E-07	7.388E-13	4.072E-25
RH105M	6.187E+05	1.839E+05	1.512E+04	1.980E-01	2.594E-06	2.473E-19	0.000E+00	0.000E+00	0.000E+00	0.000E+00
RU106	9.771E+04	9.765E+04	9.753E+04	9.698E+04	9.643E+04	9.499E+04	9.235E+04	8.728E+04	8.248E+04	7.367E+04
RH106	5.505E+05	9.765E+04	9.753E+04	9.698E+04	9.643E+04	9.499E+04	9.235E+04	8.728E+04	8.248E+04	7.367E+04
RH106M	2.209E+05	1.776E+04	1.149E+02	1.615E-08	2.272E-18	0.000E+00	0.000E+00	0.000E+00	0.000E+00	0.000E+00
RH107	4.683E+05	1.304E-01	6.279E-15	0.000E+00	0.000E+00	0.000E+00	0.000E+00	0.000E+00	0.000E+00	0.000E+00
PD109	1.462E+05	9.735E+04	4.271E+04	1.048E+03	2.572E+01	1.308E-03	1.164E-11	9.217E-28	7.300E-44	4.578E-76
AG109M	1.461E+05	9.738E+04	4.272E+04	1.048E+03	2.573E+01	1.308E-03	1.164E-11	9.220E-28	7.302E-44	4.579E-76
AG110	5.610E+04	2.500E+00	2.496E+00	2.475E+00	2.454E+00	2.400E+00	2.303E+00	2.119E+00	1.950E+00	1.651E+00
AG110M	1.882E+02	1.880E+02	1.876E+02	1.861E+02	1.845E+02	1.805E+02	1.731E+02	1.593E+02	1.466E+02	1.241E+02
PD111	6.061E+04	1.656E+02	2.204E+01	2.526E-03	2.895E-07	8.974E-18	1.775E-37	0.000E+00	0.000E+00	0.000E+00
PD111M	6.218E+02	2.272E+02	3.025E+01	3.467E-03	3.974E-07	1.232E-17	2.436E-37	0.000E+00	0.000E+00	0.000E+00
AG111	6.013E+04	5.844E+04	5.493E+04	4.155E+04	3.143E+04	1.493E+04	3.699E+03	2.269E+02	1.392E+01	5.241E-02
AG111M	6.031E+04	1.876E+02	2.497E+01	2.870E-03	3.290E-07	1.020E-17	2.017E-37	0.000E+00	0.000E+00	0.000E+00

Table 12.2-1. (continued).

Nuclide	SCRAM	8.0HR	1.0D	4.0D	7.0D	15.0D	30.0D	60.0D	90.0D	150.0D
CD111M	5.162E+00	5.569E-03	6.482E-09	0.000E+00	0.000E+00	0.000E+00	0.000E+00	0.000E+00	0.000E+00	0.000E+00
PD112	4.164E+04	3.160E+04	1.820E+04	1.520E+03	1.269E+02	1.690E-01	6.861E-07	1.130E-17	1.862E-28	5.055E-50
AG112	4.263E+04	3.629E+04	2.153E+04	1.800E+03	1.503E+02	2.002E-01	8.127E-07	1.339E-17	2.206E-28	5.988E-50
AG113	3.540E+04	1.249E+04	1.541E+03	1.255E-01	1.021E-05	1.270E-16	4.534E-37	0.000E+00	0.000E+00	0.000E+00
CD113M	6.346E+00	6.358E+00	6.364E+00	6.362E+00	6.360E+00	6.353E+00	6.341E+00	6.316E+00	6.291E+00	6.242E+00
AG115	2.397E+04	1.476E-03	5.244E-18	0.000E+00	0.000E+00	0.000E+00	0.000E+00	0.000E+00	0.000E+00	0.000E+00
CD115	3.160E+04	2.863E+04	2.327E+04	9.149E+03	3.598E+03	2.986E+02	2.808E+00	2.484E-04	2.197E-08	1.718E-16
CD115M	1.795E+03	1.786E+03	1.767E+03	1.687E+03	1.610E+03	1.422E+03	1.126E+03	7.063E+02	4.431E+02	1.744E+02
IN115M	3.219E+04	3.048E+04	2.525E+04	9.949E+03	3.913E+03	3.249E+02	3.133E+00	4.991E-02	3.114E-02	1.226E-02
IN116M	1.144E+04	2.455E+01	1.130E-04	0.000E+00	0.000E+00	0.000E+00	0.000E+00	0.000E+00	0.000E+00	0.000E+00
CD117	2.213E+04	2.638E+03	3.705E+01	1.708E-07	7.876E-16	0.000E+00	0.000E+00	0.000E+00	0.000E+00	0.000E+00
CD117M	1.191E+04	2.337E+03	8.953E+01	3.778E-05	1.594E-11	1.596E-28	0.000E+00	0.000E+00	0.000E+00	0.000E+00
IN117	2.035E+04	6.741E+03	1.761E+02	5.059E-05	2.117E-11	2.120E-28	0.000E+00	0.000E+00	0.000E+00	0.000E+00
IN117M	2.582E+04	8.160E+03	2.146E+02	3.933E-05	1.633E-11	1.636E-28	0.000E+00	0.000E+00	0.000E+00	0.000E+00
SN117M	1.377E+01	1.355E+01	1.311E+01	1.130E+01	9.739E+00	6.555E+00	3.120E+00	7.068E-01	1.601E-01	8.217E-03
CD118	3.733E+04	5.013E+01	9.011E-05	0.000E+00	0.000E+00	0.000E+00	0.000E+00	0.000E+00	0.000E+00	0.000E+00
IN118	3.734E+04	5.021E+01	9.026E-05	0.000E+00	0.000E+00	0.000E+00	0.000E+00	0.000E+00	0.000E+00	0.000E+00
IN119	1.026E+04	2.622E-05	2.310E-21	0.000E+00	0.000E+00	0.000E+00	0.000E+00	0.000E+00	0.000E+00	0.000E+00
IN119M	2.663E+04	4.515E-04	3.979E-20	0.000E+00	0.000E+00	0.000E+00	0.000E+00	0.000E+00	0.000E+00	0.000E+00
SN119M	8.551E+01	8.544E+01	8.528E+01	8.456E+01	8.384E+01	8.197E+01	7.856E+01	7.217E+01	6.630E+01	5.595E+01
SN121	3.938E+04	3.205E+04	2.119E+04	3.291E+03	5.112E+02	3.564E+00	3.223E-04	2.636E-12	2.155E-20	1.441E-36
SB122	2.625E+03	2.410E+03	2.031E+03	9.401E+02	4.353E+02	5.583E+01	1.188E+00	5.372E-04	2.430E-07	4.974E-14
SN123	3.292E+03	3.286E+03	3.274E+03	3.222E+03	3.171E+03	3.037E+03	2.803E+03	2.386E+03	2.031E+03	1.472E+03
SN123M	3.660E+04	9.169E+00	5.657E-07	0.000E+00	0.000E+00	0.000E+00	0.000E+00	0.000E+00	0.000E+00	0.000E+00
SB124	6.410E+02	6.386E+02	6.337E+02	6.122E+02	5.914E+02	5.393E+02	4.538E+02	3.212E+02	2.274E+02	1.140E+02
SN125	3.256E+04	3.179E+04	3.030E+04	2.442E+04	1.968E+04	1.107E+04	3.766E+03	4.355E+02	5.038E+01	6.739E-01
SB125	3.079E+03	3.086E+03	3.099E+03	3.149E+03	3.187E+03	3.252E+03	3.288E+03	3.252E+03	3.190E+03	3.062E+03
TE125M	1.941E+02	1.962E+02	2.003E+02	2.185E+02	2.365E+02	2.826E+02	3.599E+02	4.783E+02	5.573E+02	6.391E+02
SB126	2.497E+03	2.452E+03	2.362E+03	1.997E+03	1.689E+03	1.080E+03	4.667E+02	8.721E+01	1.631E+01	5.929E-01
SB126M	1.133E+03	1.738E-01	1.738E-01	1.738E-01	1.738E-01	1.738E-01	1.738E-01	1.738E-01	1.738E-01	1.738E-01
SN127	2.105E+05	1.502E+04	7.638E+01	3.647E-09	1.741E-19	0.000E+00	0.000E+00	0.000E+00	0.000E+00	0.000E+00
SN127M	1.045E+05	0.000E+00	0.000E+00	0.000E+00	0.000E+00	0.000E+00	0.000E+00	0.000E+00	0.000E+00	0.000E+00
SB127	3.369E+05	3.216E+05	2.855E+05	1.664E+05	9.693E+04	2.295E+04	1.541E+03	6.949E+00	3.133E-02	6.368E-07
TE127	3.170E+05	3.080E+05	2.827E+05	1.731E+05	1.067E+05	3.555E+04	1.390E+04	1.028E+04	8.488E+03	5.796E+03
TE127M	1.362E+04	1.369E+04	1.381E+04	1.413E+04	1.420E+04	1.384E+04	1.268E+04	1.049E+04	8.666E+03	5.917E+03
SN128	7.564E+05	2.690E+03	3.402E-02	0.000E+00	0.000E+00	0.000E+00	0.000E+00	0.000E+00	0.000E+00	0.000E+00
SB128	3.418E+04	1.847E+04	5.395E+03	2.122E+01	8.346E-02	3.217E-08	3.027E-20	0.000E+00	0.000E+00	0.000E+00

Table 12.2-1. (continued).

Nuclide	SCRAM	8.0HR	1.0D	4.0D	7.0D	15.0D	30.0D	60.0D	90.0D	150.0D
SB128M	7.825E+05	3.266E+03	4.129E-02	0.000E+00	0.000E+00	0.000E+00	0.000E+00	0.000E+00	0.000E+00	0.000E+00
I128	1.817E+04	2.990E-02	8.100E-14	0.000E+00	0.000E+00	0.000E+00	0.000E+00	0.000E+00	0.000E+00	0.000E+00
SB129	1.411E+06	3.965E+05	3.042E+04	2.920E-01	2.802E-06	1.166E-19	0.000E+00	0.000E+00	0.000E+00	0.000E+00
TE129	1.356E+06	5.658E+05	1.334E+05	9.143E+04	8.594E+04	7.287E+04	5.347E+04	2.880E+04	1.551E+04	4.498E+03
TE129M	1.515E+05	1.512E+05	1.494E+05	1.405E+05	1.320E+05	1.119E+05	8.215E+04	4.424E+04	2.383E+04	6.910E+03
XE129M	3.091E+01	3.003E+01	2.834E+01	2.186E+01	1.685E+01	8.426E+00	2.297E+00	1.707E-01	1.269E-02	7.011E-05
SB130	4.479E+05	1.094E+02	6.519E-06	0.000E+00	0.000E+00	0.000E+00	0.000E+00	0.000E+00	0.000E+00	0.000E+00
I130	5.396E+04	3.460E+04	1.411E+04	2.489E+02	4.391E+00	9.264E-05	1.584E-13	4.630E-31	1.353E-48	1.156E-83
SB131	5.213E+06	2.770E+00	7.547E-13	0.000E+00	0.000E+00	0.000E+00	0.000E+00	0.000E+00	0.000E+00	0.000E+00
TE131	5.275E+06	1.425E+05	9.843E+04	1.865E+04	3.533E+03	4.184E+01	1.021E-02	6.088E-10	3.629E-17	1.289E-31
TE131M	7.565E+05	6.328E+05	4.372E+05	8.283E+04	1.569E+04	1.858E+02	4.537E-02	2.704E-09	1.612E-16	5.727E-31
I131	5.983E+06	5.854E+06	5.556E+06	4.337E+06	3.358E+06	1.686E+06	4.627E+05	3.484E+04	2.624E+03	1.488E+01
XE131M	6.148E+04	6.156E+04	6.163E+04	6.048E+04	5.757E+04	4.590E+04	2.473E+04	5.366E+03	1.014E+03	3.227E+01
TE132	8.914E+06	8.308E+06	7.209E+06	3.808E+06	2.011E+06	3.667E+05	1.508E+04	2.550E+01	4.313E-02	1.233E-07
I132	9.057E+06	8.548E+06	7.427E+06	3.923E+06	2.072E+06	3.779E+05	1.554E+04	2.628E+01	4.444E-02	1.271E-07
CS132	7.624E+01	7.357E+01	6.850E+01	4.968E+01	3.603E+01	1.530E+01	3.071E+00	1.237E-01	4.985E-03	8.091E-06
TE133	7.896E+06	2.448E+03	1.487E-02	0.000E+00	0.000E+00	0.000E+00	0.000E+00	0.000E+00	0.000E+00	0.000E+00
TE133M	5.918E+06	1.460E+04	8.870E-02	0.000E+00	0.000E+00	0.000E+00	0.000E+00	0.000E+00	0.000E+00	0.000E+00
I133	1.377E+07	1.083E+07	6.355E+06	5.768E+05	5.236E+04	8.716E+01	5.372E-04	2.041E-14	7.756E-25	1.120E-45
XE133	1.355E+07	1.350E+07	1.308E+07	9.598E+06	6.559E+06	2.297E+06	3.169E+05	6.017E+03	1.142E+02	4.114E-02
XE133M	4.109E+05	4.053E+05	3.738E+05	1.802E+05	7.292E+04	5.873E+03	5.093E+01	3.827E-03	2.876E-07	1.625E-15
TE134	1.356E+07	4.739E+03	5.782E-04	0.000E+00	0.000E+00	0.000E+00	0.000E+00	0.000E+00	0.000E+00	0.000E+00
I134	1.543E+07	1.034E+05	3.881E-01	0.000E+00	0.000E+00	0.000E+00	0.000E+00	0.000E+00	0.000E+00	0.000E+00
CS134	3.763E+04	3.765E+04	3.763E+04	3.752E+04	3.742E+04	3.715E+04	3.664E+04	3.564E+04	3.467E+04	3.281E+04
CS134M	1.751E+05	2.587E+04	5.648E+02	1.897E-05	6.371E-13	7.481E-33	0.000E+00	0.000E+00	0.000E+00	0.000E+00
I135	1.275E+07	5.513E+06	1.030E+06	5.425E+02	2.857E-01	5.169E-10	2.095E-26	0.000E+00	0.000E+00	0.000E+00
XE135	4.706E+05	4.056E+06	2.796E+06	2.148E+04	9.381E+01	4.136E-05	4.934E-17	0.000E+00	0.000E+00	0.000E+00
XE135M	2.317E+06	8.830E+05	1.650E+05	8.689E+01	4.576E-02	8.279E-11	3.356E-27	0.000E+00	0.000E+00	0.000E+00
CS135M	4.279E+04	8.037E+01	2.834E-04	0.000E+00	0.000E+00	0.000E+00	0.000E+00	0.000E+00	0.000E+00	0.000E+00
BA135M	8.026E+00	6.616E+00	4.495E+00	7.896E-01	1.387E-01	1.342E-03	2.244E-07	6.275E-15	1.755E-22	1.372E-37
CS136	2.707E+04	2.660E+04	2.568E+04	2.191E+04	1.869E+04	1.224E+04	5.536E+03	1.132E+03	2.315E+02	9.684E+00
BA136M	4.461E+03	4.383E+03	4.231E+03	3.610E+03	3.080E+03	2.017E+03	9.124E+02	1.866E+02	3.816E+01	1.596E+00
CS137	4.848E+04	4.849E+04	4.848E+04	4.847E+04	4.847E+04	4.844E+04	4.839E+04	4.830E+04	4.821E+04	4.803E+04
BA137M	4.641E+04	4.587E+04	4.587E+04	4.586E+04	4.585E+04	4.583E+04	4.578E+04	4.569E+04	4.561E+04	4.544E+04
XE138	1.262E+07	8.032E-04	3.239E-24	0.000E+00	0.000E+00	0.000E+00	0.000E+00	0.000E+00	0.000E+00	0.000E+00
CS138	1.362E+07	7.682E+02	8.141E-07	0.000E+00	0.000E+00	0.000E+00	0.000E+00	0.000E+00	0.000E+00	0.000E+00
BA139	1.306E+07	2.651E+05	8.492E+01	1.600E-14	3.014E-30	0.000E+00	0.000E+00	0.000E+00	0.000E+00	0.000E+00

Table 12.2-1. (continued).

Nuclide	SCRAM	8.0HR	1.0D	4.0D	7.0D	15.0D	30.0D	60.0D	90.0D	150.0D
BA140	1.243E+07	1.221E+07	1.178E+07	1.001E+07	8.509E+06	5.515E+06	2.446E+06	4.813E+05	9.468E+04	3.665E+03
LA140	1.255E+07	1.252E+07	1.239E+07	1.119E+07	9.695E+06	6.344E+06	2.815E+06	5.539E+05	1.090E+05	4.217E+03
BA141	1.192E+07	1.491E-01	2.255E-17	0.000E+00	0.000E+00	0.000E+00	0.000E+00	0.000E+00	0.000E+00	0.000E+00
LA141	1.197E+07	3.170E+06	1.886E+05	5.772E-01	1.766E-06	3.486E-21	0.000E+00	0.000E+00	0.000E+00	0.000E+00
CE141	8.762E+06	8.749E+06	8.641E+06	8.106E+06	7.604E+06	6.412E+06	4.657E+06	2.456E+06	1.296E+06	3.606E+05
BA142	1.168E+07	3.664E-07	0.000E+00	0.000E+00	0.000E+00	0.000E+00	0.000E+00	0.000E+00	0.000E+00	0.000E+00
LA142	1.189E+07	3.705E+05	2.827E+02	2.647E-12	2.478E-26	0.000E+00	0.000E+00	0.000E+00	0.000E+00	0.000E+00
PR142	1.015E+05	7.615E+04	4.265E+04	3.140E+03	2.312E+02	2.202E-01	4.764E-07	2.230E-18	1.044E-29	2.288E-52
PR142M	2.242E+04	2.842E-06	4.570E-26	0.000E+00	0.000E+00	0.000E+00	0.000E+00	0.000E+00	0.000E+00	0.000E+00
LA143	1.189E+07	5.764E-04	1.314E-24	0.000E+00	0.000E+00	0.000E+00	0.000E+00	0.000E+00	0.000E+00	0.000E+00
CE143	1.216E+07	1.035E+07	7.399E+06	1.631E+06	3.594E+05	6.370E+03	3.312E+00	8.958E-07	2.423E-13	1.772E-26
PR143	1.125E+07	1.125E+07	1.117E+07	1.011E+07	8.791E+06	5.868E+06	2.727E+06	5.887E+05	1.271E+05	5.924E+03
CE144	1.539E+06	1.538E+06	1.535E+06	1.524E+06	1.513E+06	1.484E+06	1.430E+06	1.329E+06	1.236E+06	1.068E+06
PR144	2.151E+06	1.538E+06	1.535E+06	1.524E+06	1.513E+06	1.484E+06	1.430E+06	1.330E+06	1.236E+06	1.068E+06
PR144M	1.854E+04	1.845E+04	1.842E+04	1.829E+04	1.815E+04	1.780E+04	1.716E+04	1.595E+04	1.483E+04	1.281E+04
PR145	7.917E+06	3.163E+06	4.952E+05	1.177E+02	2.796E-02	6.057E-12	4.589E-30	0.000E+00	0.000E+00	0.000E+00
CE146	6.000E+06	4.037E-04	1.798E-24	0.000E+00	0.000E+00	0.000E+00	0.000E+00	0.000E+00	0.000E+00	0.000E+00
PR146	6.018E+06	1.562E+01	1.787E-11	0.000E+00	0.000E+00	0.000E+00	0.000E+00	0.000E+00	0.000E+00	0.000E+00
PR147	4.614E+06	4.669E-06	0.000E+00	0.000E+00	0.000E+00	0.000E+00	0.000E+00	0.000E+00	0.000E+00	0.000E+00
ND147	4.375E+06	4.288E+06	4.113E+06	3.408E+06	2.824E+06	1.710E+06	6.681E+05	1.019E+05	1.555E+04	3.620E+02
PM147	1.014E+05	1.024E+05	1.044E+05	1.123E+05	1.188E+05	1.309E+05	1.414E+05	1.448E+05	1.427E+05	1.368E+05
PM148	5.255E+05	5.034E+05	4.620E+05	3.141E+05	2.136E+05	7.677E+04	1.182E+04	7.761E+02	3.366E+02	1.212E+02
PM148M	2.669E+04	2.654E+04	2.624E+04	2.495E+04	2.373E+04	2.075E+04	1.613E+04	9.749E+03	5.892E+03	2.152E+03
ND149	2.252E+06	9.331E+04	1.534E+02	4.544E-11	1.346E-23	0.000E+00	0.000E+00	0.000E+00	0.000E+00	0.000E+00
PM149	3.705E+06	3.404E+06	2.765E+06	1.080E+06	4.217E+05	3.437E+04	3.124E+02	2.580E-02	2.131E-06	1.454E-14
PM150	3.430E+05	4.332E+04	6.909E+02	5.650E-06	4.621E-14	1.254E-35	0.000E+00	0.000E+00	0.000E+00	0.000E+00
ND151	8.706E+05	1.945E-06	0.000E+00	0.000E+00	0.000E+00	0.000E+00	0.000E+00	0.000E+00	0.000E+00	0.000E+00
PM151	8.521E+05	7.062E+05	4.778E+05	8.237E+04	1.420E+04	1.307E+02	1.991E-02	4.616E-10	1.070E-17	5.755E-33
SM151	1.544E+02	1.599E+02	1.681E+02	1.823E+02	1.848E+02	1.853E+02	1.852E+02	1.851E+02	1.850E+02	1.847E+02
ND152	5.474E+05	1.501E-07	0.000E+00	0.000E+00	0.000E+00	0.000E+00	0.000E+00	0.000E+00	0.000E+00	0.000E+00
PM152	5.900E+05	2.333E-07	0.000E+00	0.000E+00	0.000E+00	0.000E+00	0.000E+00	0.000E+00	0.000E+00	0.000E+00
EU152M	8.084E+01	4.459E+01	1.356E+01	6.408E-02	3.027E-04	1.902E-10	4.474E-22	0.000E+00	0.000E+00	0.000E+00
SM153	1.500E+06	1.333E+06	1.051E+06	3.609E+05	1.239E+05	7.168E+03	3.424E+01	7.814E-04	1.783E-08	9.285E-18
GD153	3.585E+00	3.582E+00	3.575E+00	3.544E+00	3.514E+00	3.435E+00	3.290E+00	3.019E+00	2.771E+00	2.333E+00
EU154	1.821E+03	1.821E+03	1.820E+03	1.819E+03	1.818E+03	1.815E+03	1.809E+03	1.797E+03	1.785E+03	1.761E+03
SM155	8.078E+04	2.589E-02	2.487E-15	0.000E+00	0.000E+00	0.000E+00	0.000E+00	0.000E+00	0.000E+00	0.000E+00
EU155	1.197E+03	1.197E+03	1.197E+03	1.196E+03	1.194E+03	1.191E+03	1.184E+03	1.170E+03	1.157E+03	1.131E+03

Table 12.2-1. (continued).

Nuclide	SCRAM	8.0HR	1.0D	4.0D	7.0D	15.0D	30.0D	60.0D	90.0D	150.0D
SM156	3.294E+04	1.827E+04	5.616E+03	2.778E+01	1.374E-01	9.755E-08	2.887E-19	0.000E+00	0.000E+00	0.000E+00
EU156	1.390E+05	1.373E+05	1.335E+05	1.165E+05	1.016E+05	7.054E+04	3.557E+04	9.044E+03	2.300E+03	1.487E+02
EU157	6.237E+04	4.342E+04	2.093E+04	7.850E+02	2.944E+01	4.640E-03	3.442E-10	1.895E-24	1.043E-38	3.159E-67
SM158	8.462E+03	4.390E+00	1.181E-06	0.000E+00	0.000E+00	0.000E+00	0.000E+00	0.000E+00	0.000E+00	0.000E+00
EU158	9.580E+03	4.424E+01	4.624E-05	0.000E+00	0.000E+00	0.000E+00	0.000E+00	0.000E+00	0.000E+00	0.000E+00
EU159	3.251E+03	3.858E-05	4.170E-21	0.000E+00	0.000E+00	0.000E+00	0.000E+00	0.000E+00	0.000E+00	0.000E+00
GD159	4.614E+03	3.470E+03	1.912E+03	1.306E+02	8.930E+00	6.973E-03	1.040E-08	2.313E-20	5.146E-32	2.546E-55
TB160	1.009E+02	1.006E+02	9.992E+01	9.709E+01	9.433E+01	8.737E+01	7.567E+01	5.676E+01	4.257E+01	2.395E+01
TB161	5.178E+02	5.010E+02	4.686E+02	3.470E+02	2.569E+02	1.153E+02	2.566E+01	1.271E+00	6.299E-02	1.546E-04
TB162M	5.870E+00	5.229E-01	3.619E-03	6.906E-13	1.318E-22	0.000E+00	0.000E+00	0.000E+00	0.000E+00	0.000E+00
TB163	7.112E+01	2.998E-06	4.539E-21	0.000E+00	0.000E+00	0.000E+00	0.000E+00	0.000E+00	0.000E+00	0.000E+00
GD164	2.321E+01	5.034E-06	2.367E-19	0.000E+00	0.000E+00	0.000E+00	0.000E+00	0.000E+00	0.000E+00	0.000E+00
TB164	2.953E+01	5.842E-06	2.747E-19	0.000E+00	0.000E+00	0.000E+00	0.000E+00	0.000E+00	0.000E+00	0.000E+00
DY165	7.970E+01	7.570E+00	6.754E-02	4.041E-11	2.418E-20	0.000E+00	0.000E+00	0.000E+00	0.000E+00	0.000E+00
DY166	9.279E+00	8.669E+00	7.566E+00	4.101E+00	2.223E+00	4.343E-01	2.033E-02	4.453E-05	9.756E-08	4.682E-13
HO166	1.923E+01	1.731E+01	1.418E+01	6.562E+00	3.383E+00	6.476E-01	3.035E-02	6.635E-05	1.454E-07	6.976E-13
SUM OF LISTED NUCLIDES	5.824E+08	2.466E+08	1.795E+08	1.115E+08	8.860E+07	6.040E+07	3.937E+07	2.323E+07	1.604E+07	8.887E+06
ORIGEN2 TOTAL	1.129E+09	2.466E+08	1.795E+08	1.115E+08	8.860E+07	6.040E+07	3.937E+07	2.323E+07	1.604E+07	8.887E+06

Table 12.2-2. Fission-product gamma activity in an 800-kW test loop (disintegrations/sec).

Energy interval (MeV)	Time after fission-product release			
	0.6 min	6 min	1 hr	10 hr
0.5–1.5	1.3×10^{15}	1.3×10^{15}	8.0×10^{14}	3.0×10^{14}
1.5–2.5	1.6×10^{14}	1.5×10^{14}	7.7×10^{13}	8.3×10^{12}
2.5–3.5	1.0×10^{14}	4.3×10^{12}	1.4×10^{12}	1.4×10^{11}
3.5–4.5	3.3×10^{11}	3.3×10^{11}	2.3×10^{11}	3.0×10^{10}
4.5–5.5	2.5×10^{13}	4.4×10^{11}	—	—

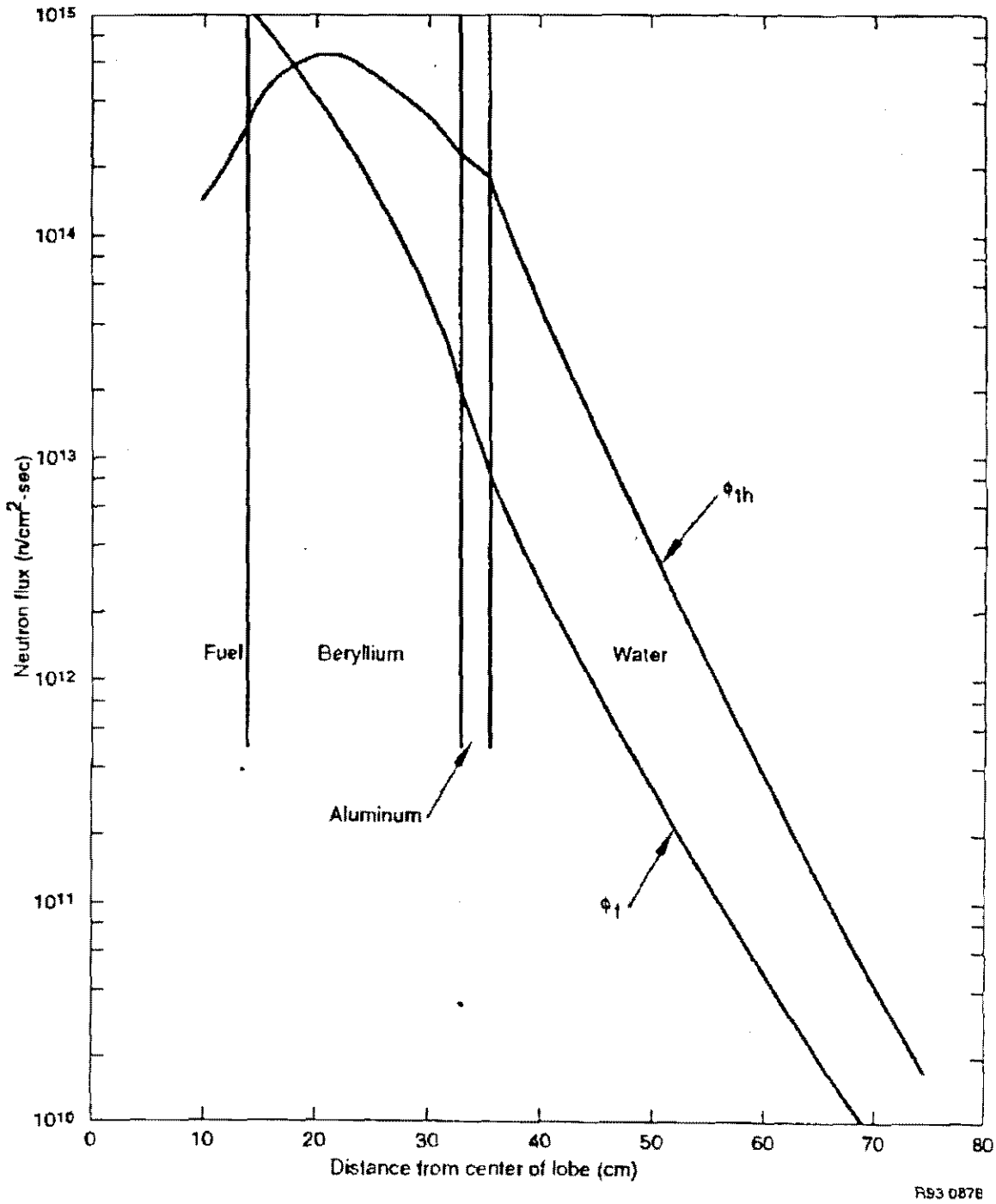

Figure 12.2-1. Fast- and thermal-neutron fluxes along core radial centerline. **(For Information Only)**

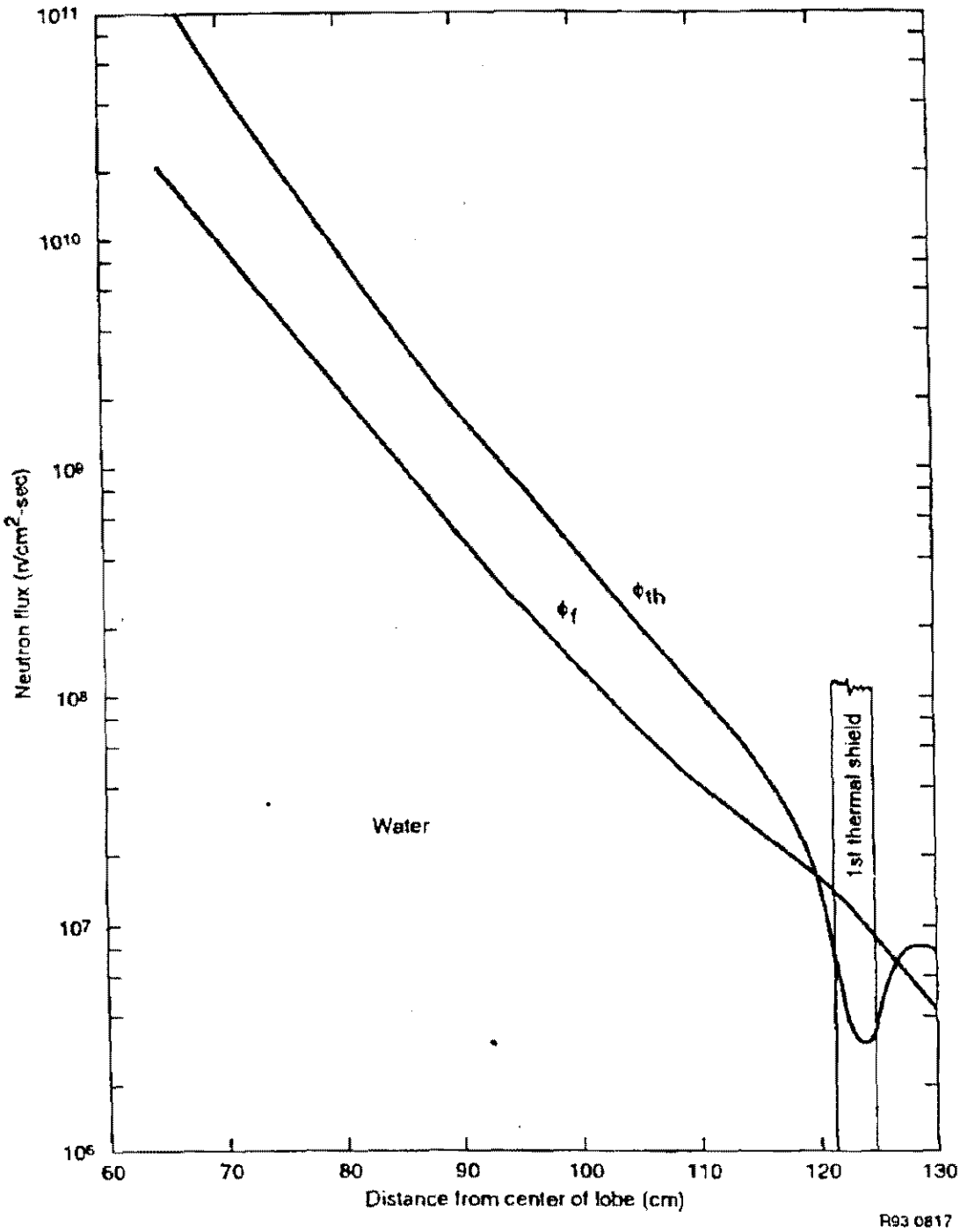

Figure 12.2-2. Fast- and thermal-neutron fluxes along core radial centerline. **(For Information Only)**

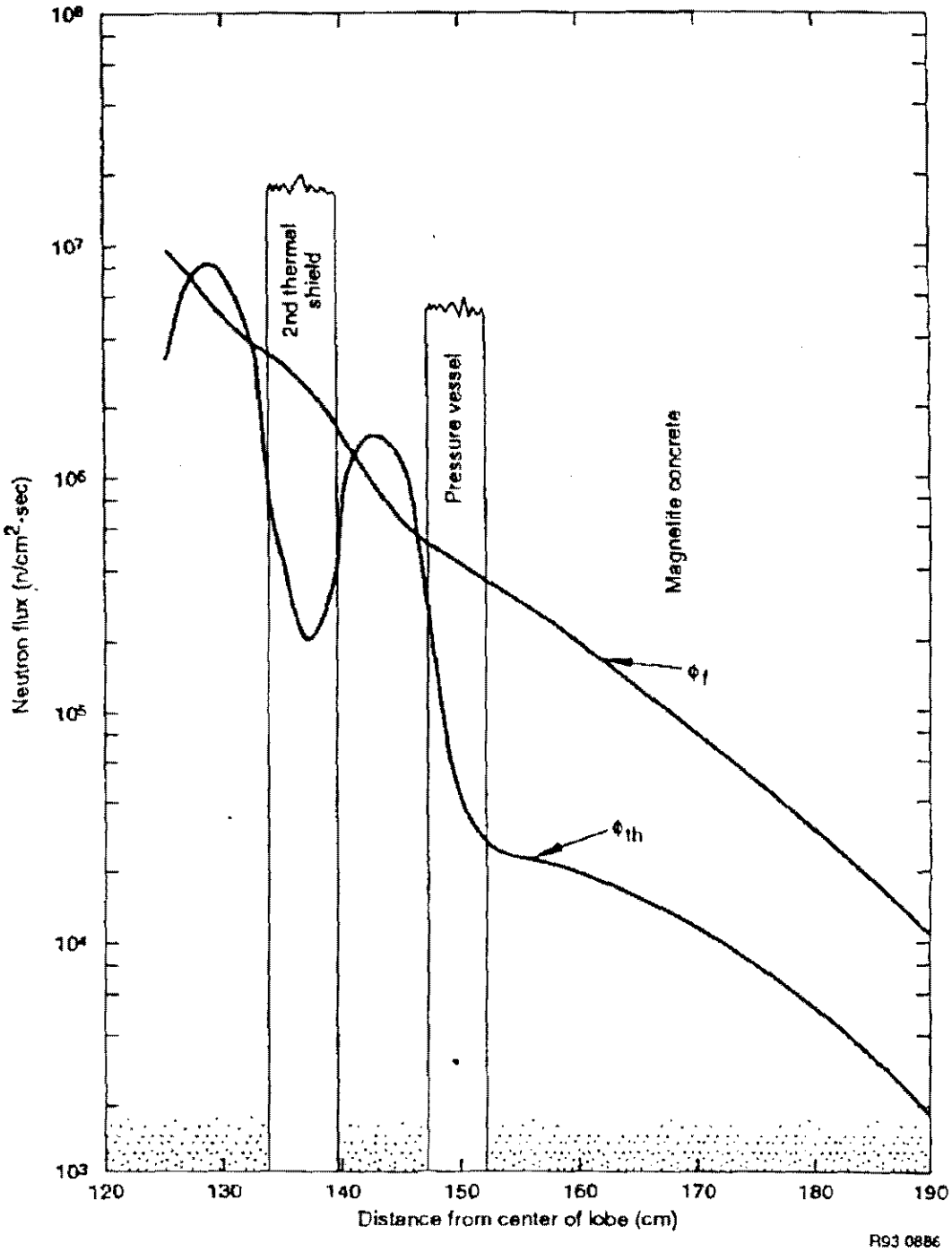

Figure 12.2-3. Fast- and thermal-neutron fluxes along core radial centerline. **(For Information Only)**

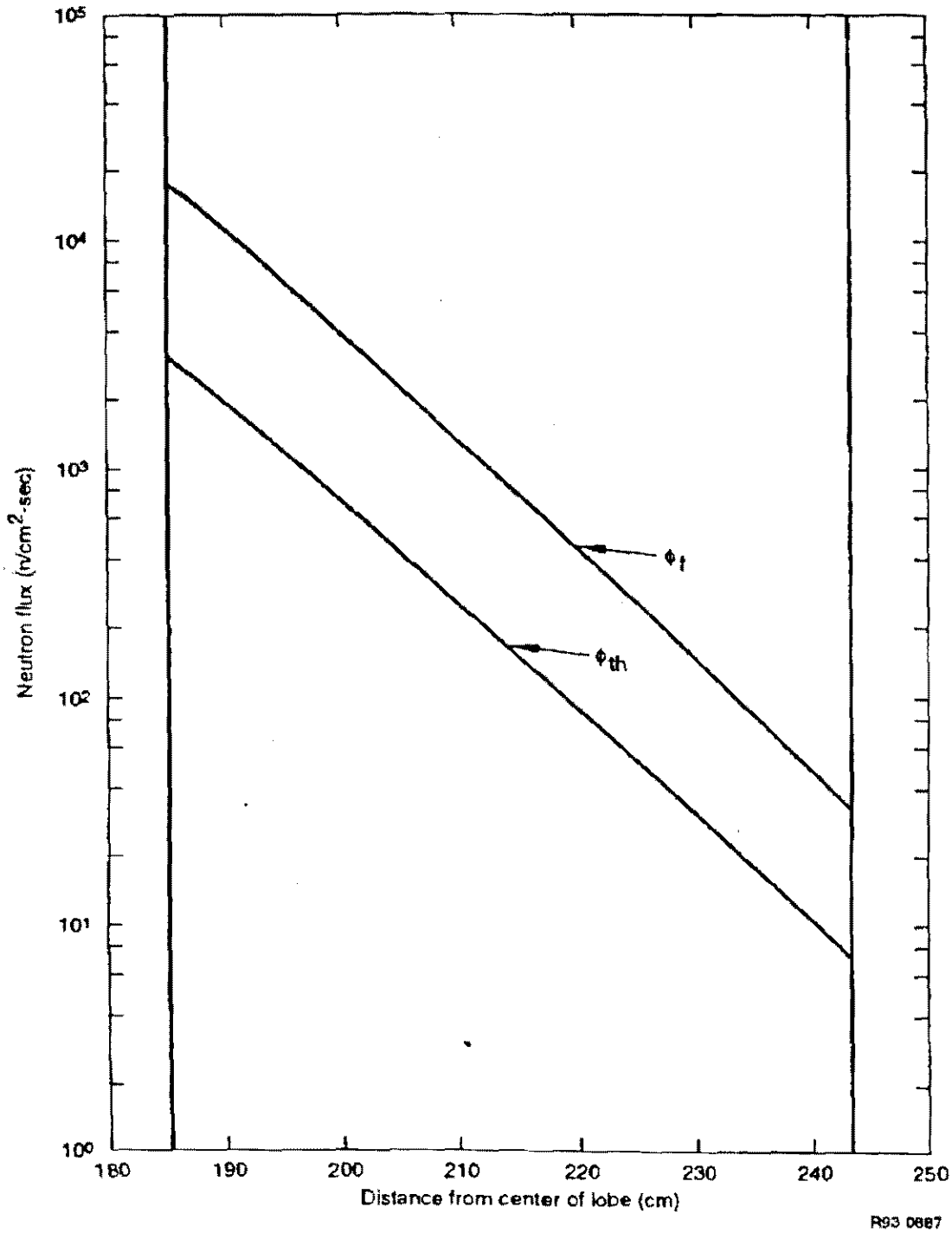

Figure 12.2-4. Fast- and thermal-neutron fluxes along core radial centerline. **(For Information Only)**

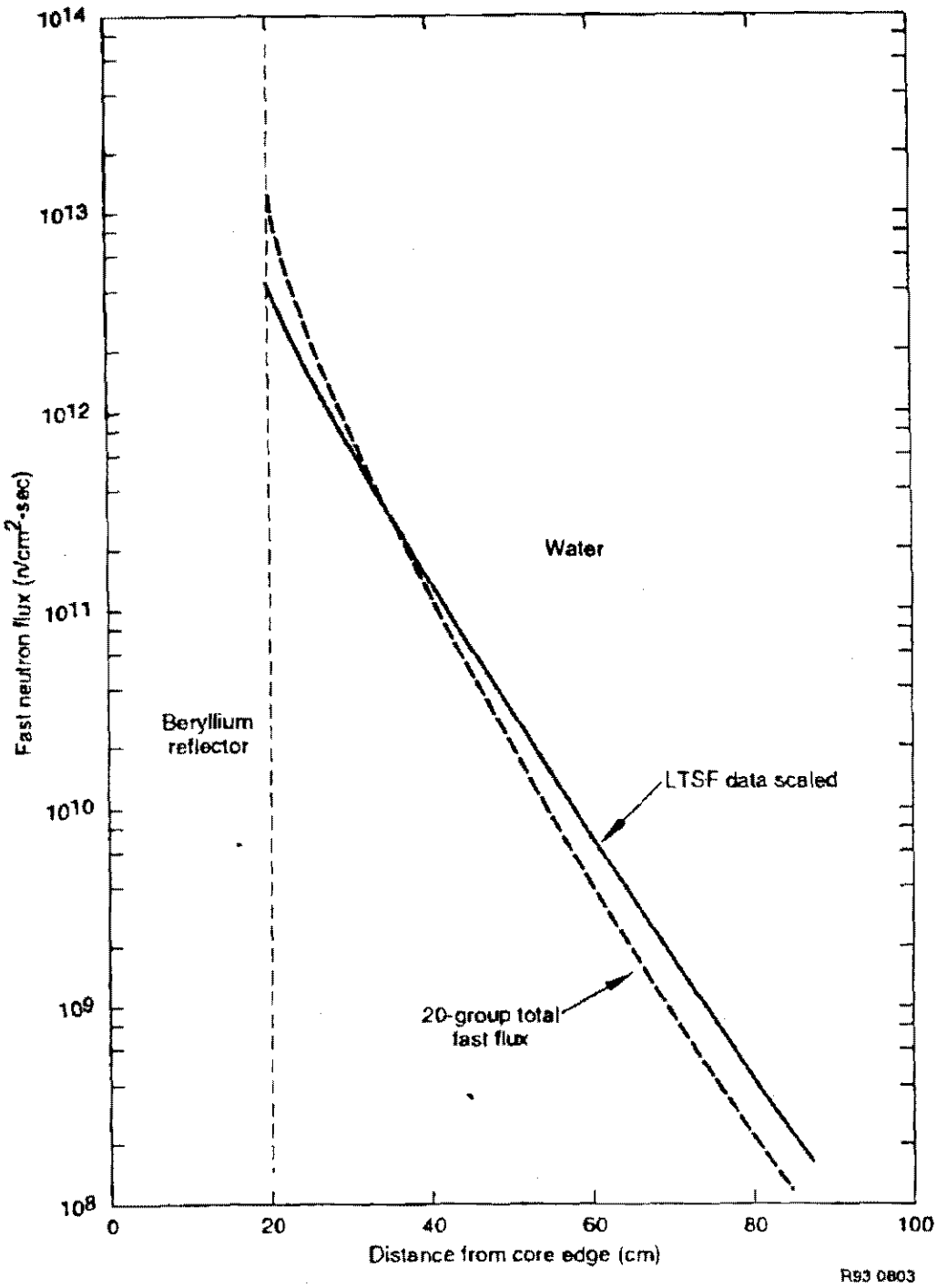

Figure 12.2-5. Comparison of fast flux computed by 20-group code to that scaled from Lid Tank Shield Facility data. **(For Information Only)**

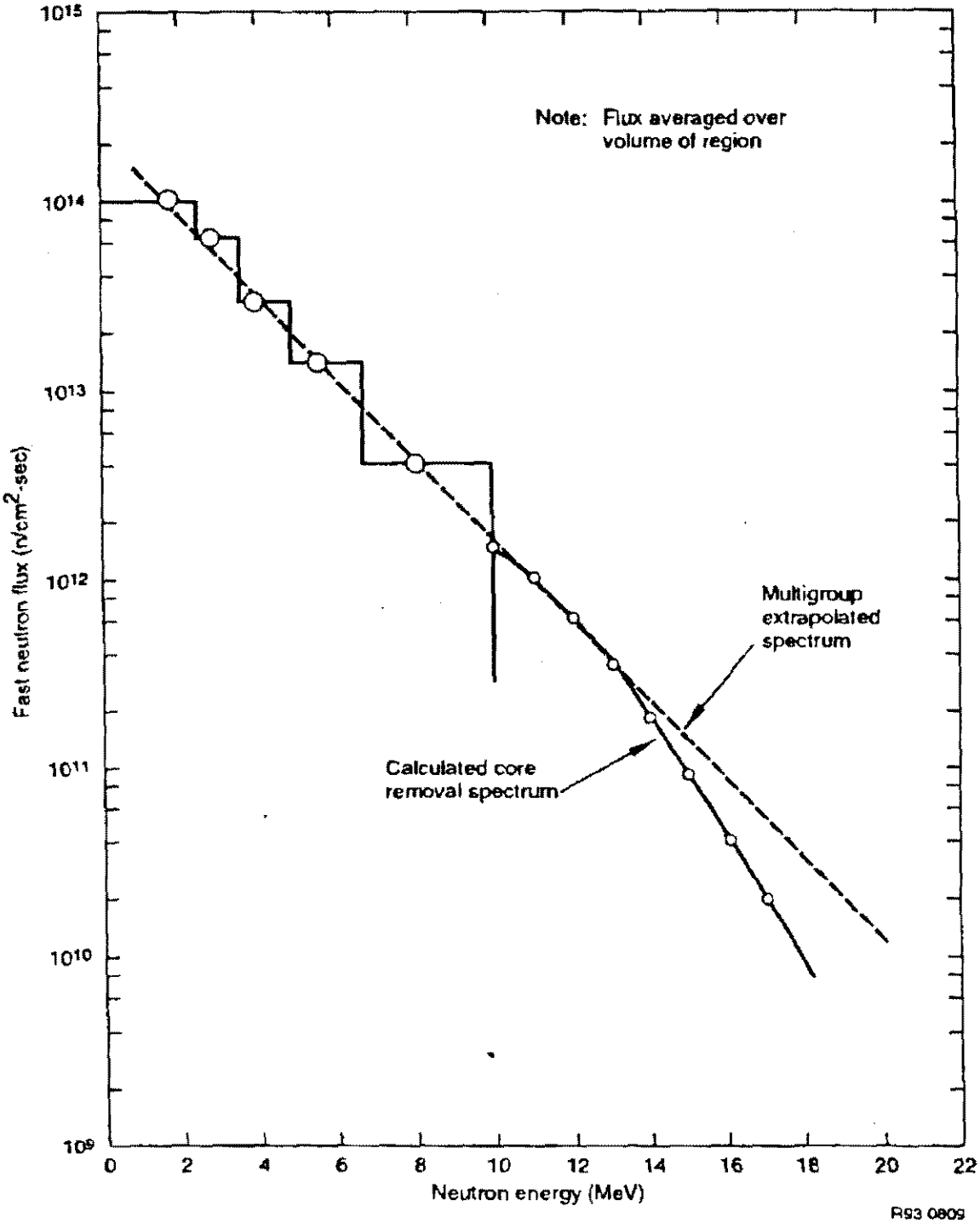

Figure 12.2-6. Fast-neutron flux spectrum in fuel region (single lobe power = 50 MW). **(For Information Only)**

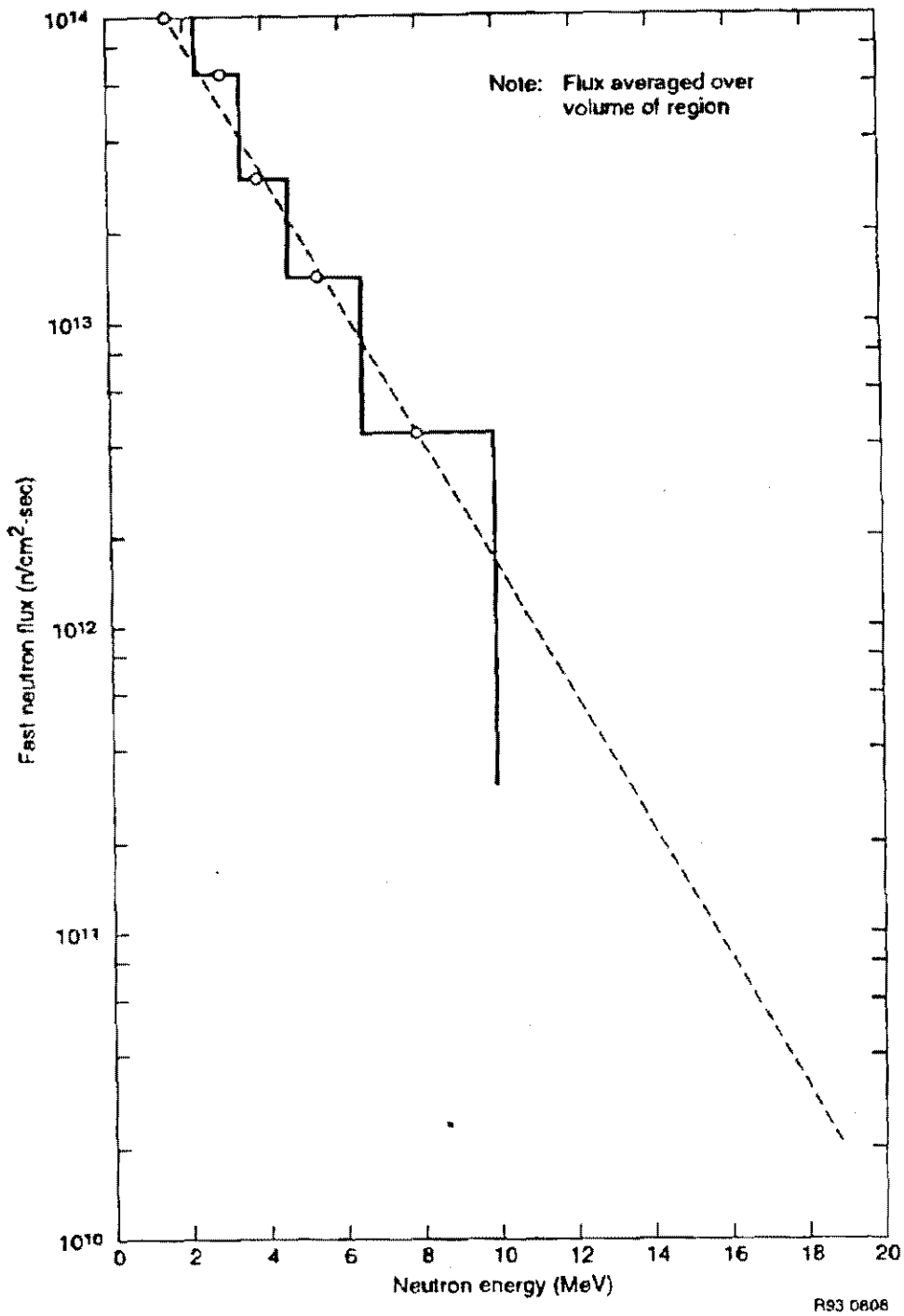

Figure 12.2-7. Fast-neutron flux spectrum in flux trap region (single lobe power = 50 MW). **(For Information Only)**

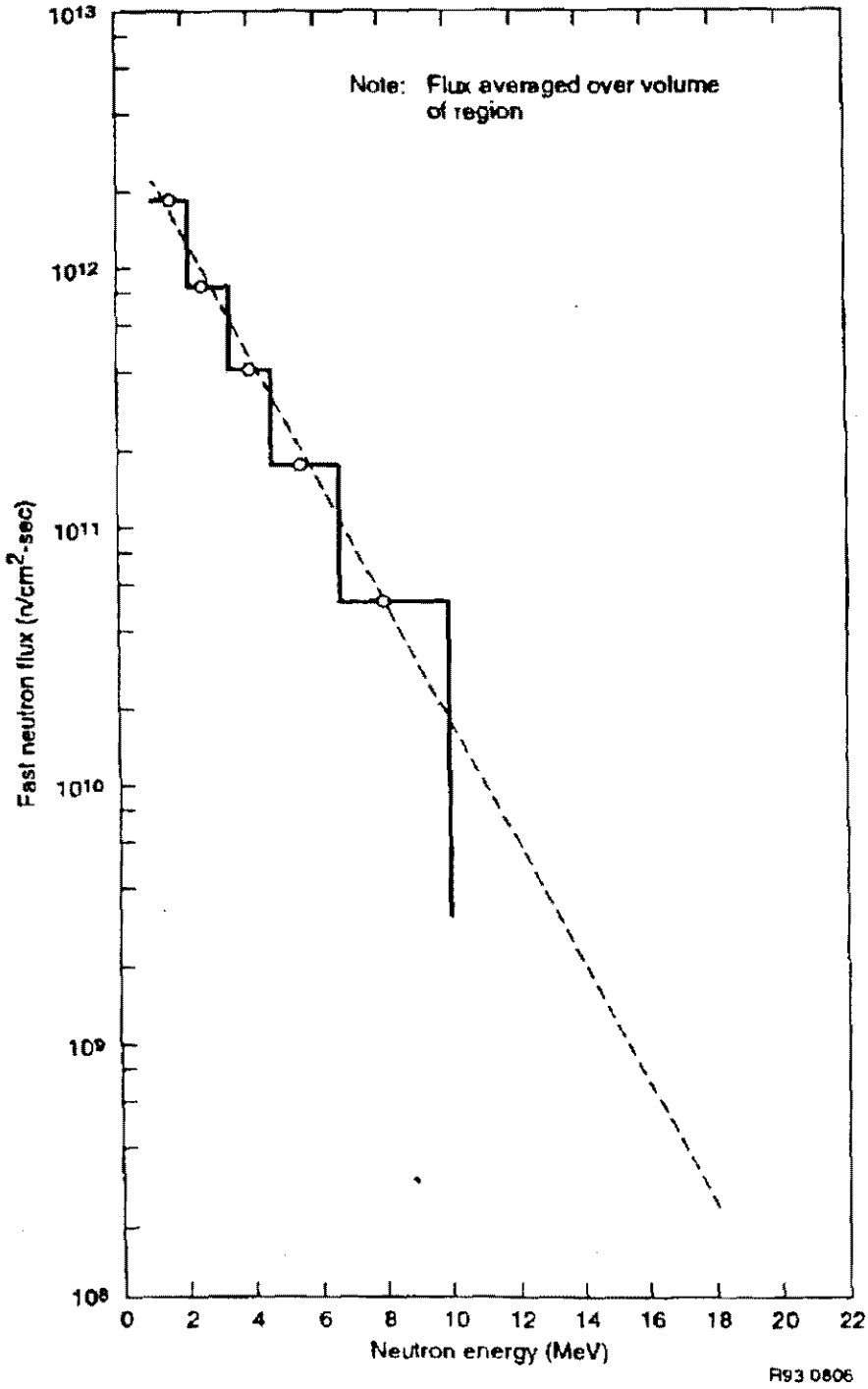

Figure 12.2-8. Fast-neutron flux spectrum in reflector region (single lobe power = 50 MW). **(For Information Only)**

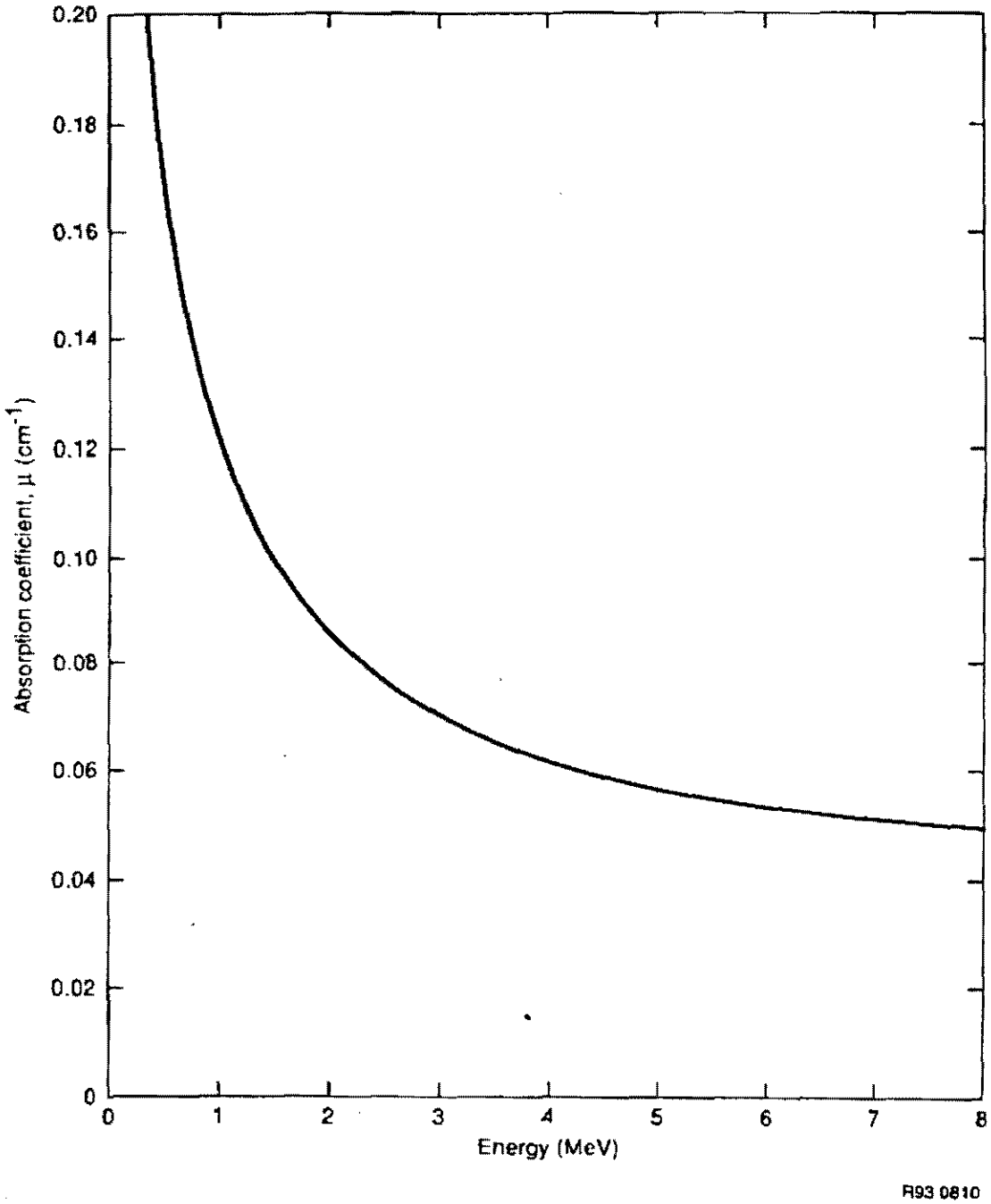

Figure 12.2-9. Linear self-absorption coefficient for ATR core fuel region. **(For Information Only)**

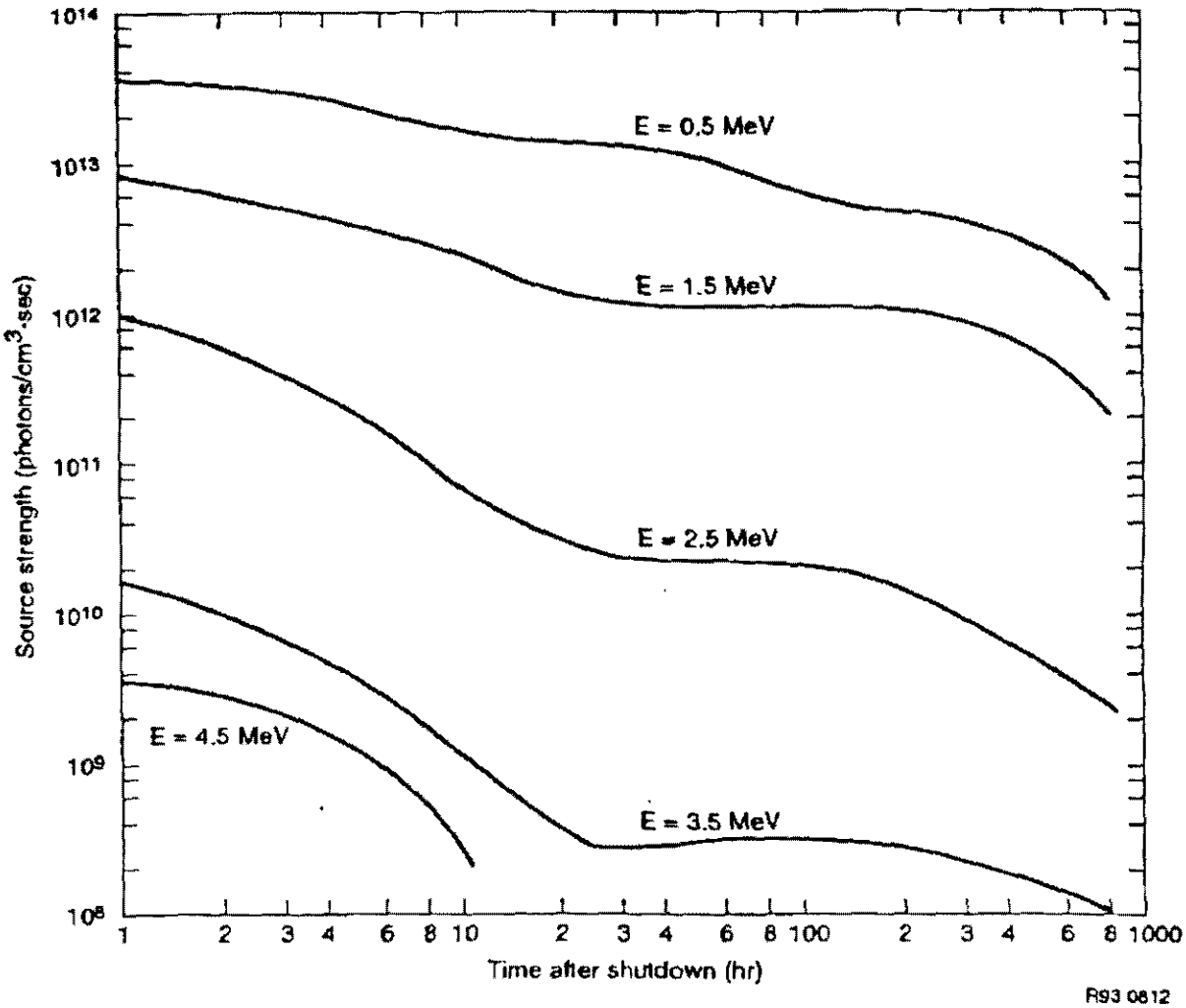

Figure 12.2-10. Fission-product gamma ray source strengths in core versus time after shutdown (operating time, 400 Hours). **(For Information Only)**

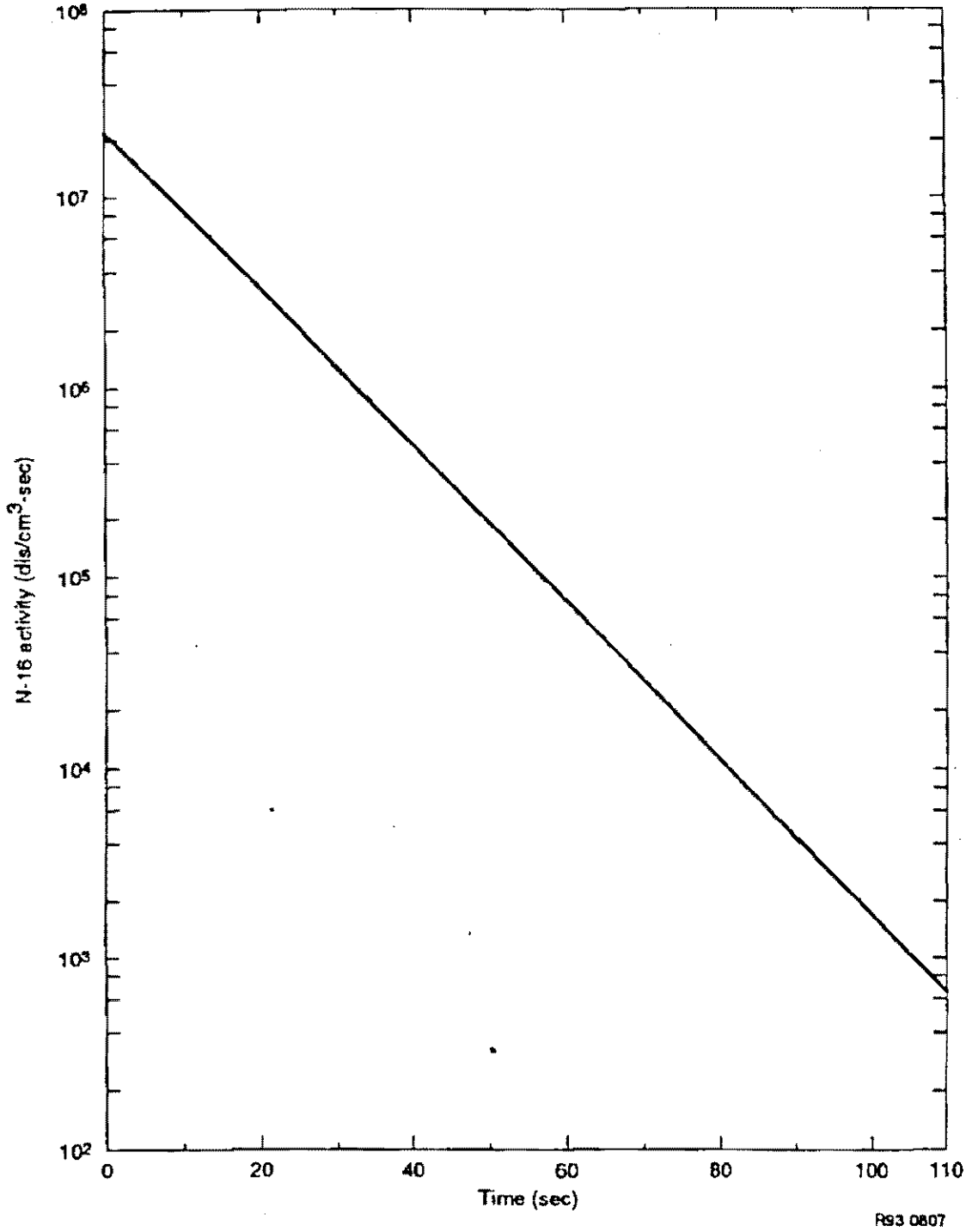

Figure 12.2-11. Equilibrium N-16 activity versus delay time after leaving bottom plenum. **(For Information Only)**

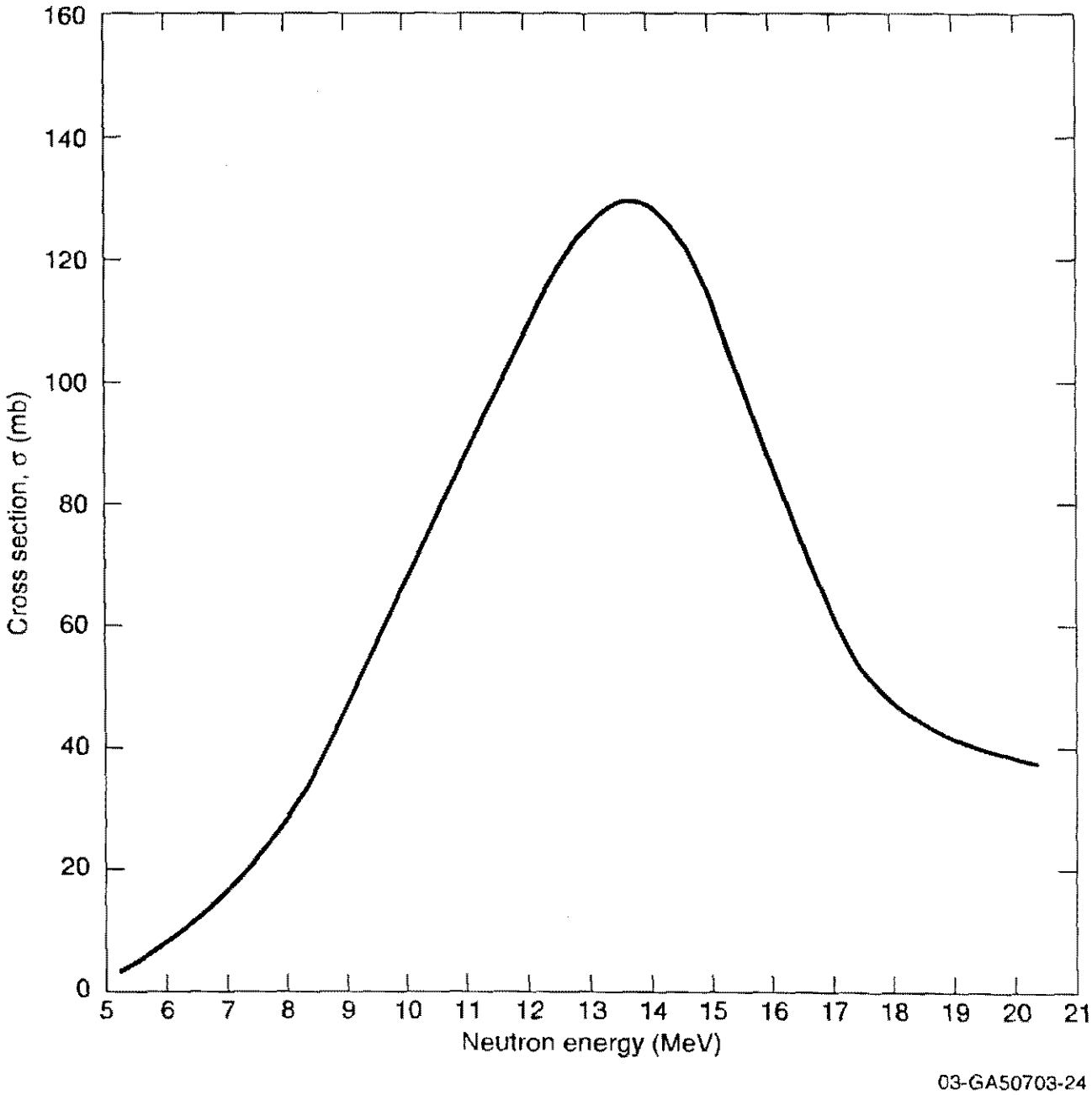

Figure 12.2-12. Cross section for Al-27 (n, α) Na-24 reaction. **(For Information Only)**

12.3 Radiation Protection Design Features

This section presents the facility features (deBoisblanc and Cohen 1965) (Lucas and Wagoner 2000) that are of primary importance regarding to the confinement passive system (shielding), the active ventilation system, and the radiological control program discussed in Sections 12.4, 12.5, and 12.7, respectively.

12.3.1 Facility Design Features

The reactor building is divided into confinement and areas outside of confinement. The confinement acts as the final barrier to delay the release of airborne radioactive contamination resulting from an accidental release of radioactivity from the reactor or experiments. The confinement includes all areas in which an accidental contaminated release from the reactor or loop experiments must be controlled or where sealed penetrations from such an area to an otherwise "clean" area would be difficult to maintain during normal operation.

A reactor building leak rate test system was designed and installed to pressurize the building confinement while measuring the air inflow into the building and the building differential pressure. The purpose of the Reactor Building Leak Rate Test System is to provide permanent equipment that is independent of the confinement ventilation systems for the performance of the ATR Building Leak Rate Test. The leak rate test is performed annually and after modifications that impact building confinement, to ensure that building confinement leakage is consistent with the assumptions in the accident analysis.

The major mechanical components of the leak rate test system are located outside the ATR confinement boundary, in the plenum for Reactor Main Floor Supply Fan, HVS-1, located on the ATRC second mezzanine. These components consist of a supply fan, airflow sensing element, and related ductwork connecting the discharge of the fan to the ATR confinement. Penetration through the west ATR confinement wall is via a welded aluminum box or plenum. The ductwork connects to a flange welded onto the plenum. When the measurement system is not in use, confinement is maintained by the installation of a gasketed plate bolted to the flange on the plenum.

The ATR building leak rate test panel, located on the west wall of the reactor main floor, is the operating station for conducting leak rate tests. Contained inside the panel are the variable frequency drive (VFD) controller for the supply fan, leak rate test system airflow flow indication, and differential pressure indication between the reactor main floor and outside of the reactor building. Selector switch SW-20-1 positions solenoid valve SV-20-152 to one of two outside pressure taps, one on the south side of ATR west of the truck airlock, and the other on the eastside of ATR. The test panel additionally contains supply fan safety disconnect switch, building confinement differential pressure transmitter, and associated valves.

Confinement fixed penetrations are sealed, and ventilation penetrations are equipped with gasketed dampers. Upon detection of high radiation in the ATR building exhaust by the RMS-1 system, the confinement will be closed by dampers and the shutoff of ventilation supply and exhaust fans, as further described in Section 12.5.

Management of liquid radioactive waste is discussed in Chapter 11. Chapter 5 discusses leakage from primary coolant system components. The major overflow drains at the ATR are the canal overflow, the degassing tank overflow, and the reactor vessel upper and lower drains. All of the overflow paths are directed to the warm waste system. All systems that contain activated/contaminated water are provided with warm or hot equipment drains to direct flow to the appropriate collection tanks. Sources of water (vents, drains, etc.) from highly radioactive systems such as the experimental loops are hard piped directly to the Hot Waste System described in Chapter 11. In the rare instance where leakage from these systems occurs, the liquid is contained in the area, the evaporate is directed to the facility ventilation system and the liquid is cleaned up as soon as possible using approved radiological procedures.

12.3.2 Facility Arrangement

The reactor building, as shown in Figures 12.1-3 to 12.1-5 and 12.3-1, is a complex of enclosed areas approximately 200 ft by 200 ft, extending a maximum of 60 ft above grade and 60 ft below grade. The average depth of the substructure is about 42 ft, and the average superstructure height is about 38 ft.

The first floor, shown in Figure 12.1-3, is located at grade and is divided into the following areas: reactor area, storage canal area, utility area (including the diesel-generator pit), general storage and laydown area, critical facility area, counting room, control rooms, and offices. The first and second mezzanine floors, shown in Figure 12.3-1, are devoted to office and to H&V rooms. The first and second basements, shown in Figures 12.1-4 and 12.1-5, are used for experiment cubicles and equipment, electrical equipment, heat exchangers, demineralizer equipment, H&V equipment, and associated items.

Access between basement levels and the first floor is by means of four enclosed main stairwells, located approximately at the midpoint of each face of the building. Stairways are provided to the mezzanine levels from the first floor. Each major area is provided with access to adjacent areas within the building by means of at least one door. Also, each area above grade, except for the offices in the SW corner, and each stairwell leading from basement areas, except for stairwell No. 3, may be evacuated directly to the outside without passing through any other area. The offices in the SW corner and stairwell No. 3 each have two alternate exits. The SW corner offices evacuation may be through the reactor area or critical facility area; stairwell No. 3 evacuation may be through the storage canal area or utilities area.

12.3.2.1 Confinement Area. The building is divided into confinement and areas outside of confinement. The confinement, illustrated in Figures 12.1-3 to 12.1-5 and 12.3-1, has been selected to include all areas where an accidental contaminated release from the reactor or loop experiments must be contained or where sealed penetrations from such an area to an otherwise "clean" area would be difficult to maintain during normal operation. The confinement volume of 46,440 m^3 (1.64×10^6 ft^3) represents approximately 62% of the total building volume. The confinement includes the following: reactor area, including the truck airlock; reactor control room (Room 100); instrument repair room; Reactor Data Acquisition System (RDAS) area (Rooms 110 and 111); lunch room (located north of the reactor control room); first basement, including the ATR Warm Waste Treatment Facility cubicle (located on the first basement level, but outside the basement wall near the SW corner); and second basement.

The confinement boundary of the ATR also includes the doors and the canal structure.

12.3.2.2 Sampling. The drawing of water samples for chemistry analysis is normally accomplished from the following areas:

The ATR Water Chemistry Process Lab Room 124 on the ground floor of the ATR building.

Waste stream samples from the Motor Floor area below the Sub-Pile Room.

Each secondary loop cubicle for the experimental facilities.

No auxiliary facilities are available for taking water samples following upset or accident conditions. During these conditions, the *INEEL Emergency Plan/RCRA Contingency Plan* would be utilized for reentry activities, and would employ Radiological Controls personnel, as well as ATR Operations personnel, to obtain any required post-accident samples. The normal capability of monitoring ATR Stack releases and Primary-to-Secondary leakage would also be available during these conditions.

12.3.2.3 Radiation Areas. During power operation, access to high radiation areas is restricted. If necessary, entry into high radiation areas, e.g., primary cubicles, is allowed for short periods of time. Personnel entry is controlled by radiological control organization personnel and requires a Radiological Work Permit approved by the radiation control organization management.

During shutdown conditions, entry into all areas (high radiation, radiation, and contamination) is controlled, with occupancy limited based on the need and duration of the activity. Access to high radiation areas (an area where an individual could receive > 100 mrem in 1 hour at 30 cm) is normally restricted, unless a need is demonstrated and an ALARA review has been completed, if required.

In general, high radiation areas are posted and locked. Personnel requiring access to these areas are bound by Radiological Controls procedures, which prescribe entry limitations and requirements.

Access to the Reactor Main Floor, Canal Area, Laydown Area, and 1st and 2nd Basements is unrestricted with unlimited occupancy. However, these areas are controlled as Radiological Buffer Areas and require survey upon exit.

Table 12.3-1 presents a representative list of radiation levels in various portions of the ATR during shutdown conditions.

Table 12.3-1. Radiation Fields During Shutdown.

ATR Location	Representative Radiation Field in mrem/hr
Nozzle Trench	5-50
1A Primary Cubicle	< 5-10
1C Primary Cubicle	5-15
ID Primary Cubicle	10-50
B/P Demin, and Press pump room	< 5-10
H/X Room	< 5-20
2A Primary Cubicle	3-8
2B Primary Cubicle	100-150
2C Primary Cubicle	30-50
2D Primary Cubicle	30-60
2E Primary Cubicle	80-120
Outer Shim Corr.	10-30
Safety Rod Drive Room	< 5-10
SubPile Room	8-25; 20-100 (two areas)
Rod Access Room	1-2
Remainder of ATR building	< 1
Primary Pump Cubicles	< 1-2

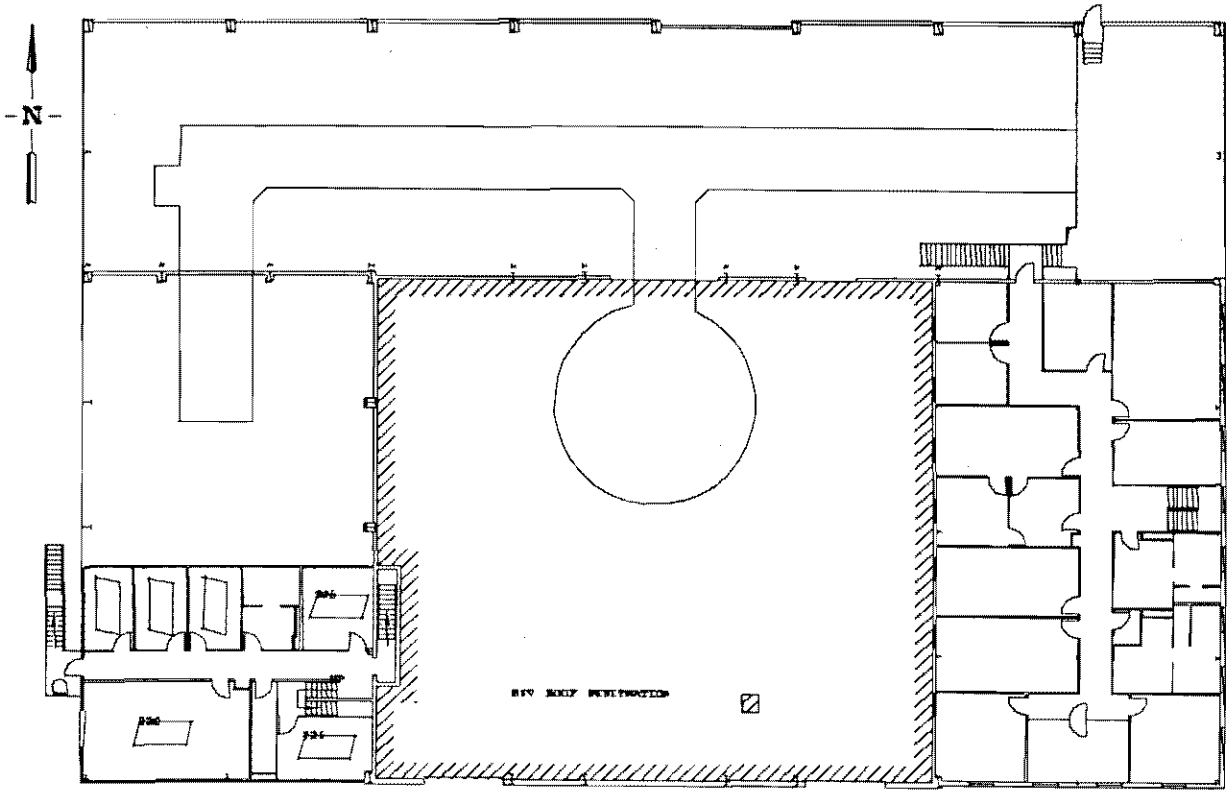

1ST MEZZANINE FLOOR PLAN

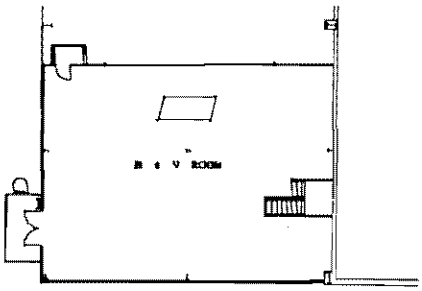

2ND MEZZANINE FLOOR PLAN

Figure 12.3-1. Confinement Area, Mezzanine Plan. **(For Information Only)**

12.4 Shielding

12.4.1 Shielding Design Criteria

Although it is not explicitly stated in the 1965 version of the ATR Safety Analysis Report (deBoisblanc and Cohen 1965) or in the *Advanced Test Reactor Final Shielding Design Report* (Howard and Jacks 1963), the ATR was designed according to the 1963 version of the *Health and Safety Design Criteria Manual* (AEC 1965). The design provided sufficient radiation shielding to allow an annual personnel exposure of not greater than 500 mrem/yr for an individual in a full-time occupancy (40 hr/week) area such as the office spaces on the mezzanine floor. The radiation dose rates tabulated in Table 12.4-1 and extracted from Table 1-2 of the *Advanced Test Reactor Final Shielding Design Report* (Howard and Jacks 1963) illustrate the design dose rates for various locations within the ATR reactor building.

Historical data demonstrates that the original radiation source term and shielding calculations produced adequate, and in some cases, conservative results. To date there has been no measurable neutron dose to ATR personnel, and gamma doses have been within the expected parameters. Recent preliminary calculations to verify the original gamma source term for a fueled experiment loop showed that the gamma rays for the lower energy groups may have been slightly under-estimated, but the gamma rays at these energy levels do not penetrate the high density concrete of the cubicle walls. The data showed that the higher energy gamma radiation had been slightly over-estimated. This indicated that the shielding material and thickness at the ATR are adequate. Gamma radiation fields are characterized by Radiological Controls personnel during routine surveys. An examination of survey results confirms the shielding design.

12.4.2 Radiation Shielding Codes

In the early 1960s when ATR was being designed, the *Reactor Shielding Design Manual* (Rockwell 1956) was the standard of reference. The shielding calculations performed for the design of ATR were accomplished with shielding codes, written by B&W that performed the calculations as specified by Rockwell. These codes are discussed in the appendices to the *Advanced Test Reactor Final Shielding Design Report* (Howard and Jacks 1963).

Neutron-flux values, described in Section 12.2.1, were generated using a B&W Company 20-group diffusion code. In the region outside the core, where the thermal-neutron flux is important in secondary-gamma calculations, the fluxes were checked with good agreement by scaling up Lid Tank Shield Facility data. The fluxes had not been compared with removal theory fluxes at the exterior of the shield because calculations showed the fluxes became insignificant outside the concrete surrounding the reactor.

For the original shielding design calculations, all gamma-ray source strength and attenuation calculations had unit energy intervals and the appropriate form of buildup for dose rate or heat-generation rate. Nuclear Development Associates' infinite-medium buildup values (Mangum 1956), generated by the moments method solutions of the time-dependent Boltzmann equation for the flux, were used. In most cases, the Taylor sum-of-exponentials form of the buildup (Goldstein and Wilkins 1954) was used.

Many of the reactor-shielding and cubicle-shielding calculations are based on the N-16 source term (Howard and Jacks 1963). There are some, however, such as canal-wall shielding and certain other aspects of the cubicle shielding, that are at least partly due to a source term based on a fuel element with a 17-day operation.

12.4.3 Radiation Source Terms

The radiation source terms used for the design of the ATR core are based primarily on normal operating circumstances. The design of the experiment cubicles, which are expected to be able to accommodate failed fuel conditions, is based not only on the N-16 source term but also considers dispersion of fission products to some extent. The radiation source terms defined for the design of ATR are discussed in Section 12.2.

12.4.4 Reactor

The major areas of the ATR referred to in this section can be referenced in the following figures in Chapter 3: Figures 3.8-10, 3.8-11, and 3.9-2.

12.4.4.1 Primary Biological Shield. The primary biological shield is designed to attenuate radiation from the core and primary coolant to a level of 5 mrem/hr at the outer surface of the shield. The shield is composed of three sections. The first is a 3-ft-thick magnetite concrete shield surrounding the pressure vessel and extending 8.5 ft above and 12.5 ft below the core midplane. The second section is a 2.5-ft ordinary concrete shield adjacent to the magnetite shield. The ordinary concrete is sized primarily for structural requirements and must be relatively free from gamma heating and radiation damage. This protection is provided by the magnetite concrete. The third section is a 5-1/2-ft ordinary concrete shield surrounding the piping corridor. This shield is designed to reduce the level of radiation from N-16 in the primary coolant piping to 5 mrem/hr at the outer shield surface.

The calculation of primary- and secondary-gamma fluxes in the thermal shields and pressure vessel was made during the early stages of Title I and employed a somewhat conservative calculation model. However, because no design problems were encountered as a consequence of the results, it was deemed unnecessary to recompute these fluxes with more refined methods during Title II design.

The gamma dose rates were computed along the core radial centerline with the aid of the B&W computer program DER-074 [Appendix B of Howard and Jacks (1963)]. The dose rate profiles are shown in Figures 12.4-1 and 12.4-2.

The neutron flux profile was calculated using the methods outlined in Section 12.2. Plots of the fast and thermal fluxes along the core radial centerline are given in Figures 12.2-1 through 12.2-4.

The secondary-gamma fluxes and dose rates were computed from the above- mentioned thermal-neutron flux profile. Details of the calculation are given in Appendix A of Howard and Jacks (1963). Figures 12.4-3 and 12.4-4 are graphs of the secondary-gamma dose rates along the radial centerline of the core.

The 5.5-ft-thick ordinary concrete shield surrounding the piping corridor is sized for shielding the N-16 gammas from the primary-coolant piping. The contribution from primary and secondary gammas to the total dose rate at the outer surface of this shield is negligible.

12.4.4.2 Subpile and Rod Access Room Shielding. The shielding for the subpile room is designed to permit entry into the room 1 hour after reactor shutdown. No access is allowed during operation. The subpile room is shielded from the core by the 1-ft-thick vessel bottom head and by the 10-ft water depth between the core and bottom head. The dose rate from the core after 1 hour of shutdown was computed at the lower surface of the bottom head using the truncated-cone geometry in computer program DER-074. Gamma sources were taken from Figure 12.2-10; dose-buildup parameters used were those for steel. Assuming a solid steel bottom head, the dose rate was computed to be less than 1.0 mrem/hr. Higher radiation levels can be expected locally, as a result of radiation streaming through neck rod and inpile loop penetrations in the bottom head.

During the Title I phase of the ATR design, a procedure was devised whereby pressure tubes containing stuck test assemblies would be removed from the vessel through the drop tube. The pressure tube and element would then be stored temporarily in the deep end of the working canal adjacent to the subpile room. Consequently, the wall between the subpile room and the working canal was sized for this condition. It was assumed that an 800-kW test element, at 1 hour of shutdown following infinite operation, was positioned 1 ft from the wall. Although the procedure for removing stuck test assemblies was revised during Title II design, the shield wall was not changed, because nearly as much shielding is needed to reduce the transient dose rates to design level in the subpile room during spent fuel removal.

The failure of a test specimen and the subsequent release of fission products to the test loop coolant was considered in the shielding of the subpile and rod access rooms. Because it is impossible to predict the nature of such a failure, the analysis was based on a postulated test element failure. The following assumptions and parameters were used to determine the fission product source activity in the loop:

- Bottom reentrant loop with 200-gal capacity
- 800-kW test specimen, infinite operation
- Release of 10% of the gross fission product gamma activity in the specimen to the coolant within 30 seconds.

The fission-product gamma activity was taken from the tables in Appendix A of Roy and Hawton (1960). The total fission-product gamma activity in the loop is shown in Table 12.4-2 as a function of energy and time after failure.

Because it is assumed that the fission products are released to the test loop coolant in a few seconds, the dose rates will be significantly higher during the first few minutes after a failure than at some later time. Instead of increasing the shielding to lower these initial dose rates to the general design level, the shielding was sized for an integrated dose from fission products during the first hour after a failure. In this case, the dose rates are of a transient nature rather than a continuous background, and a higher limit can be allowed.

The subpile room door is sized for a dose rate outside the door of 2.5 mrem/hr from N-16 in the test loops and an integrated dose of 12.5 mrem from loop fission products during the first hour following a test failure. The dose rate from N-16 was calculated for nine loops operating at 20 gpm (worst condition).

The floor between the subpile and rod-access rooms consists of 3 ft of magnetite concrete, 4 in. of steel, 6 in. of polyethylene, and local lead shielding. The concrete and steel are designed to shield the rod access room from core radiation and from N-16 in the test loop piping. Using the truncated-cone geometry in computer program DER-074, the dose rate from the core during operation was computed to be less than 1 mrem/hr at the ceiling in the rod-access room.

Where the test loop traps and exit piping (Figures 3.9-2, 10.2-1, and 10.2-2) are embedded in the subpile room floor, lead replaces concrete as the shielding material. A 6.5-in. lead shield was chosen, resulting in a dose rate of 2.5 mrem/hr in the rod access room.

In the rod access room, the design dose rate for a test specimen failure is a 25-mrem integrated dose during the first hour following the failure.

Two cases were considered. In one, the fission products were assumed to be uniformly dispersed throughout the loop. In the second case, it was assumed that 10% of the activity released to the loop was concentrated in the loop trap. The resulting dose rates, at a point 1 ft below the shield surface, are shown in Figure 12.4-5.

The wall between the piping corridor and the rod-access room is composed of 3 ft 8 in. of magnetite concrete. The dose rate at the wall surface is estimated to be about 6 mrem/hr based on the calculations for ordinary concrete. As seen in Figure 12.4-6, the dose rate from a 24-in. primary pipe through 5 ft 6 in. of ordinary concrete is 6 mrem/hr. The equivalent thickness of magnetite concrete required for shielding purposes was determined by applying a ratio of the absorption coefficient of magnetite concrete to that of ordinary concrete at 6.3 MeV.

12.4.4.3 Coolant Loop Shielding. The coolant loop shielding was based on calculations of the dose rates from N-16 in the primary coolant. Using the calculated core exit equilibrium activity of 2.2×10^7 disintegrations/cm^3-sec and the transit times to the various loop pipes, the volumetric activities of coolant in various sections of piping were calculated.

Computer program DER-074 was employed in the calculations in this section. A discussion of the methods of this program is found in Appendix B of Howard and Jacks (1963).

12.4.4.3.1 Piping Tunnel—The thickness of the walls of the piping tunnel was determined from the activity of the coolant in the 36-in. effluent pipe in the pipe tunnel. The shield thickness is 5 ft 6 in., which limits the average dose rate to about 6 mrem/hr at the outside surface of the tunnel wall.

12.4.4.3.2 Heat Exchanger Room Walls—The heat exchanger room radiation sources include piping in addition to the heat exchangers. The wall thickness around the heat exchangers and piping is 5 ft 6 in., which limits the maximum dose rate to 6 mrem/hr at the outer surface of the shield wall.

12.4.4.3.3 Pump Cubicles—The walls and ceilings around the pump cubicles are constructed of ordinary concrete and are designed to allow personnel to work inside a particular pump cubicle with that pump shut down, but with adjacent pumps operating.

The walls between the pump cubicles are 4 ft thick, and the resulting dose rate is about 6.5 mrem/hr at the wall surface in one cubicle from an adjacent operating cubicle. The wall between the pump cubicles and the heat exchanger area is 5 ft 6 in. thick and limits the dose rate in the cubicles from the heat exchanger and pipe sources to a maximum of 2.5 mrem/hr. The pump motor area is shielded from the pumps by a 4-ft wall thickness. As seen from Figure 12.4-7, the dose rate at the surface of the wall is about 6.5 mrem/hr. The floor above the pump cubicles is 5 ft 6 in. thick and is designed to limit the radiation level from the pumps to less than 1.0 mrem/hr at the surface of the floor.

12.4.4.3.4 Floor Above Heat Exchanger Room—The calculations of the dose rate on the surface of the floor above the heat exchanger room were made for three dose point distances from a location directly above Heat Exchanger 2. The shield thickness for a 1.0-mrem/hr dose rate on the floor surface was found to be 6 ft of ordinary concrete.

12.4.4.4 Top Head Shielding. The arrangement of the top head shield assembly is shown in Figure 12.4-8. The results of shield thickness calculations in the various areas is given below.

12.4.4.4.1 Working Platform—The working platform is designed to restrict the dose rate at its upper surface to 1 mrem/hr or less from the operating core and from the N-16 in the primary coolant. A thickness of about 12 in. of steel is required to reduce the dose rate to the design level.

12.4.4.4.2 Loop Transfer Shield Plate—The transfer plate, which is located on top of the shield cylinder, was designed for a dose rate of 1 rem/hr at its outer surface during test specimen transfer. A thickness of 14.75 in. of steel is required to meet design requirements for the transient dose rate.

12.4.4.4.3 Shield Cylinder—The shield cylinder was sized to restrict the transient dose rate at its outer surface to 1 rem/hr or less during test specimen transfer. Program DER-013 was used to calculate dose rates as a function of shield thickness. The required thickness of steel to meet the design specifications is 17 in. To reduce the bulk in this region, a bimetallic cylinder with a thickness of 3 in. of steel and 9 in. of lead was used as an equivalent substitute.

12.4.4.4.4 Instrument Lead Duct—The five instrument lead ducts, carrying neutron detectors for startup instrumentation, extend from the removal sleeve in the top head shield cylinder out under the working platform. A shield thickness of 5 in. of lead was calculated for a dose rate of 1 mrem/hr at the shield surface during normal core operation.

12.4.4.5 Nozzle Trench Shielding. The shielding for the nozzle access trench is designed to restrict the general radiation level in the trench (neglecting streaming through the nozzle penetrations) from elements in the core and temporary storage racks to 12.5 mrem/hr or less, 3 hours after shutdown. The shielding consists of a 2-in.-thick steel skirt surrounding the pressure vessel and extending from the floor of the nozzle trench to the 4-in.-thick vessel wall section.

12.4.4.6 Cubicle Shielding. The exterior walls around the test cubicles are constructed of magnetite concrete and are designed to

- Attenuate radiation from N-16 in the test loops to 2.5 mrem/hr at the outer surface of the wall.
- Restrict the integrated dose from an accidental release of fission products during the first hour following a test failure to 12.5 mrem/hr at the outer surface of the wall.

The primary loop cubicles, containing the loop piping and loop coolant components, are designated as "High Radiation Areas," and are locked. Representative cubicle radiological dose rates while shutdown can be found in Table 12.3-1. These areas are not entered during reactor operation without specific prior planning and use of established Radiological Control procedures.

The wall thickness between the cubicles are based on a dose rate of 7.5 mrem/hr inside a cubicle (with test loop shutdown) from adjacent operating cubicles and from the primary loop piping. The dose rate inside a cubicle from the primary loops is calculated to be about 5 mrem/hr. Because no cubicle is bounded by more than one other cubicle, the walls and floors between cubicles are sized for a 2.5-mrem/hr dose rate. The thickness of the cubicle ceilings in the first basement are governed by the 1.0-mrem/hr design dose rate on the reactor operating floor.

The cubicle areas are routinely monitored for hot spot locations. For any areas where dose rates were found to be too high, the area is cordoned off and access limited to keep personnel exposure within acceptable limits.

12.4.4.7 Canal Shielding. The overall building height limits the depth of the storage canal to 20 ft.

The condition that governs the highest predicted dose rate is the transient dose rate that occurs when a spent fuel element is raised above the storage rack to be lowered into the rack.

An 8-ft water shield height results in a 50-mrem/hr transient dose rate at the surface of the water from an average fuel element with a uniform power distribution after 10 days decay. Because of shielding by the water, most of the dose rate is due to the upper 1 ft of the element. Calculating dose rates on this basis was considered to be as conservative as using the "hottest" element and accounting for end effects. The element was assumed to be a vertical line source and the dose rate was calculated directly above the element in water by integrating point-source attenuation kernels along the length of the element. The absorption coefficients of the element were assumed to be those of water.

The shielding calculations for the walls and floor of the storage canal are based on a row of 40 fuel elements, 4-in. center-to-center spacing, 15 days shutdown, and 6 in. from both the wall and floor. To meet a design dose rate of 1.0 mrem/hr outside the canal wall, 6 ft 6 in. of ordinary concrete is required. To facilitate construction around support beams, a wall thickness of 7 ft was used.

The canal floor forms the ceiling of cubicles 2A and 2E and a portion of the pipe tunnel. The floor thickness over these areas is sized for a 5.0-mrem/hr dose rate and is 5 ft 6 in. of ordinary concrete. Elsewhere the floor is 7 ft thick with a resulting dose rate of less than 1.0 mrem/hr.

Table 12.4-1. Summary of calculated dose rates.

Location	Maximum calculated dose rate during full power operation (mrem/hr)	Maximum calculated dose rate after shutdown (mrem/hr)
Outside reactor concrete shield	6.0	< 1.0
Outside experiment H_2O loop cubicles (N-16 activity only)	2.5	< 1.0
Inside experiment H_2O loop cubicles	5.0 from adjacent operating cubicles (N-16 only), 6.0 from reactor and primary piping	< 1.0
Subpile room	No access	1.0 from core through vessel bottom head (does not include streaming through bottom head penetrations)
Rod access room	10.0	< 2.5
Floor above heat exchangers	1.5	< 1.0
Reactor area, first floor	1.0	<1.0 except during specimen and loop component transfer
Reactor vessel top head	1.0	<1.0 except during specimen and loop component transfer
Above storage canal and at floor level near parapet	1.0	1.0
Above storage canal during spent fuel transfer	50.0 transient	50.0 transient
Below storage canal	1.0	1.0
Outside walls of storage canal	1.0	1.0
Outside pipe tunnel cubicles	6.0	< 1.0
Motor area outside pump cubicles	7.0	< 1.0
Inside pump cubicles	4.0 from heat exchangers and piping, 7.0 from adjacent pump cubicle	–
Nozzle access trench	No access	12.0 from core and stored fuel (does not include streaming through vessel penetrations)
Office areas	< 0.25	< 0.25 except during specimen and loop component transfer

Table 12.4-2. Fission-product gamma activity in the test loop (disintegrations/second).

	Time after fission-product release			
Energy interval (MeV)	0.6 min	6 min	1 hr	10 hr
0.5–1.5	1.3×10^{15}	1.3×10^{15}	8.0×10^{14}	3.0×10^{14}
1.5–2.5	1.6×10^{14}	1.5×10^{14}	7.7×10^{13}	8.3×10^{12}
2.5–3.5	1.0×10^{14}	4.3×10^{12}	1.4×10^{12}	1.4×10^{11}
3.5–4.5	3.3×10^{11}	3.3×10^{11}	2.3×10^{11}	3.0×10^{10}
4.5–5.5	2.5×10^{13}	4.4×10^{11}	—	—

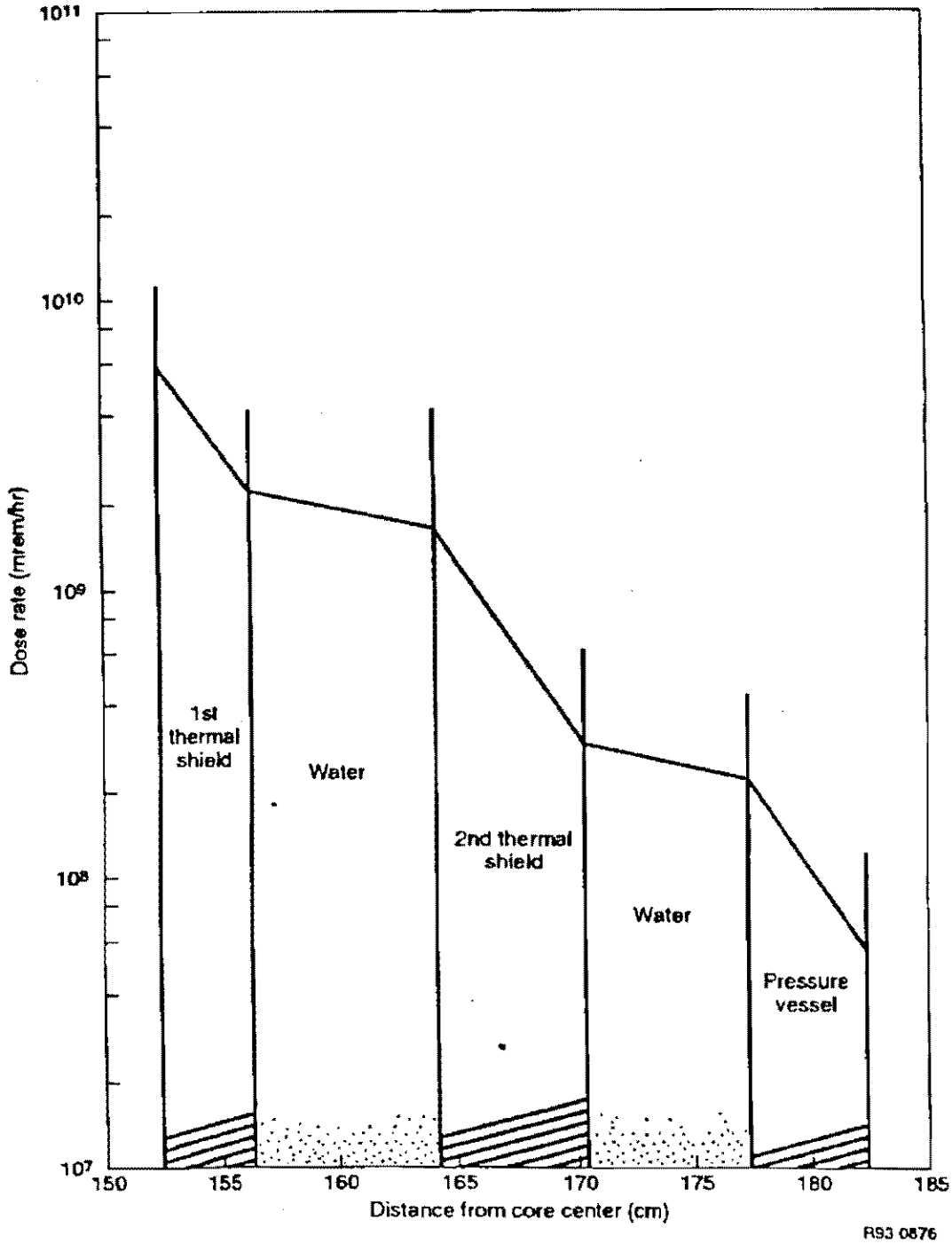

Figure 12.4-1. Primary gamma dose rates along core radial centerline. **(For Information Only)**

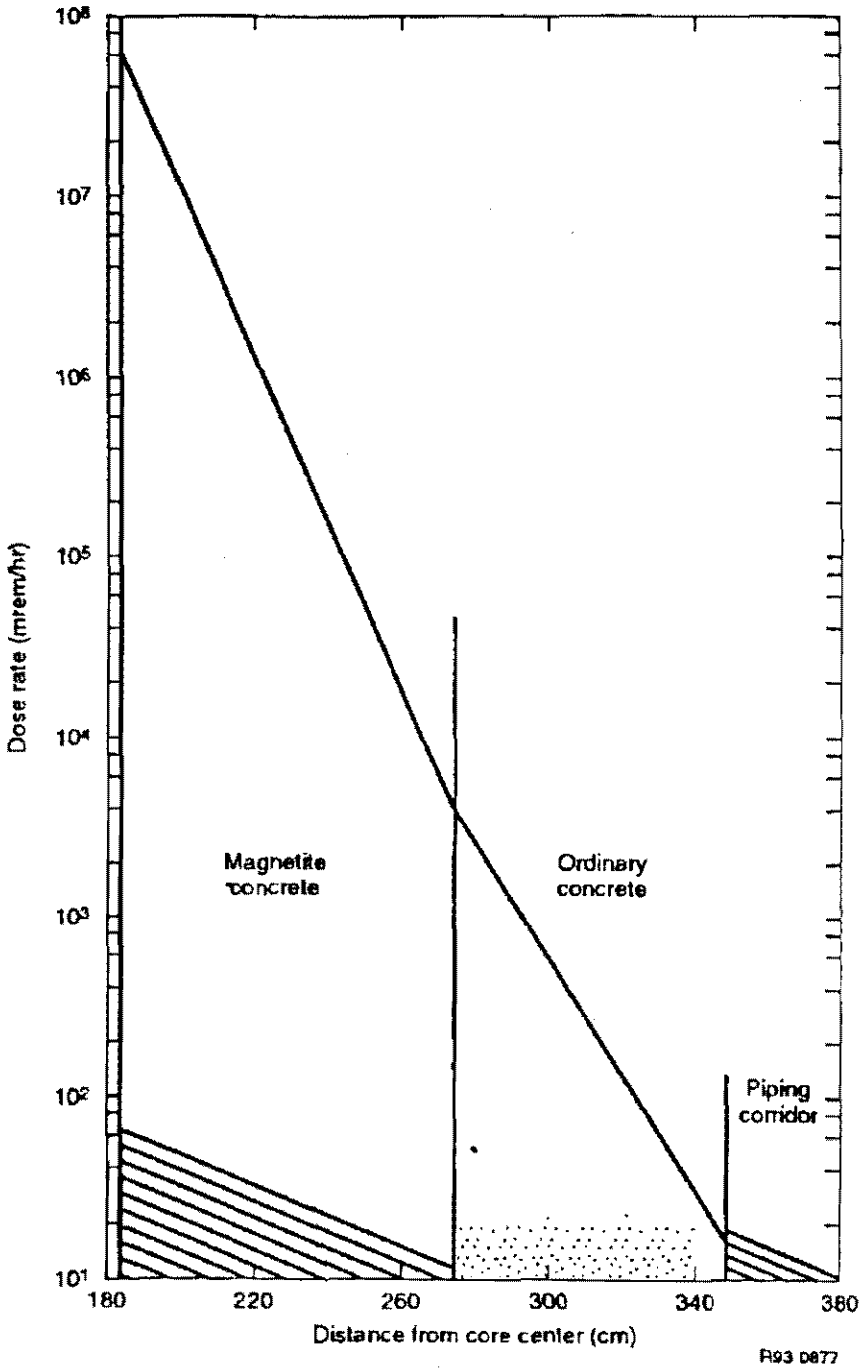

Figure 12.4-2. Primary gamma dose rates along core radial centerline. **(For Information Only)**

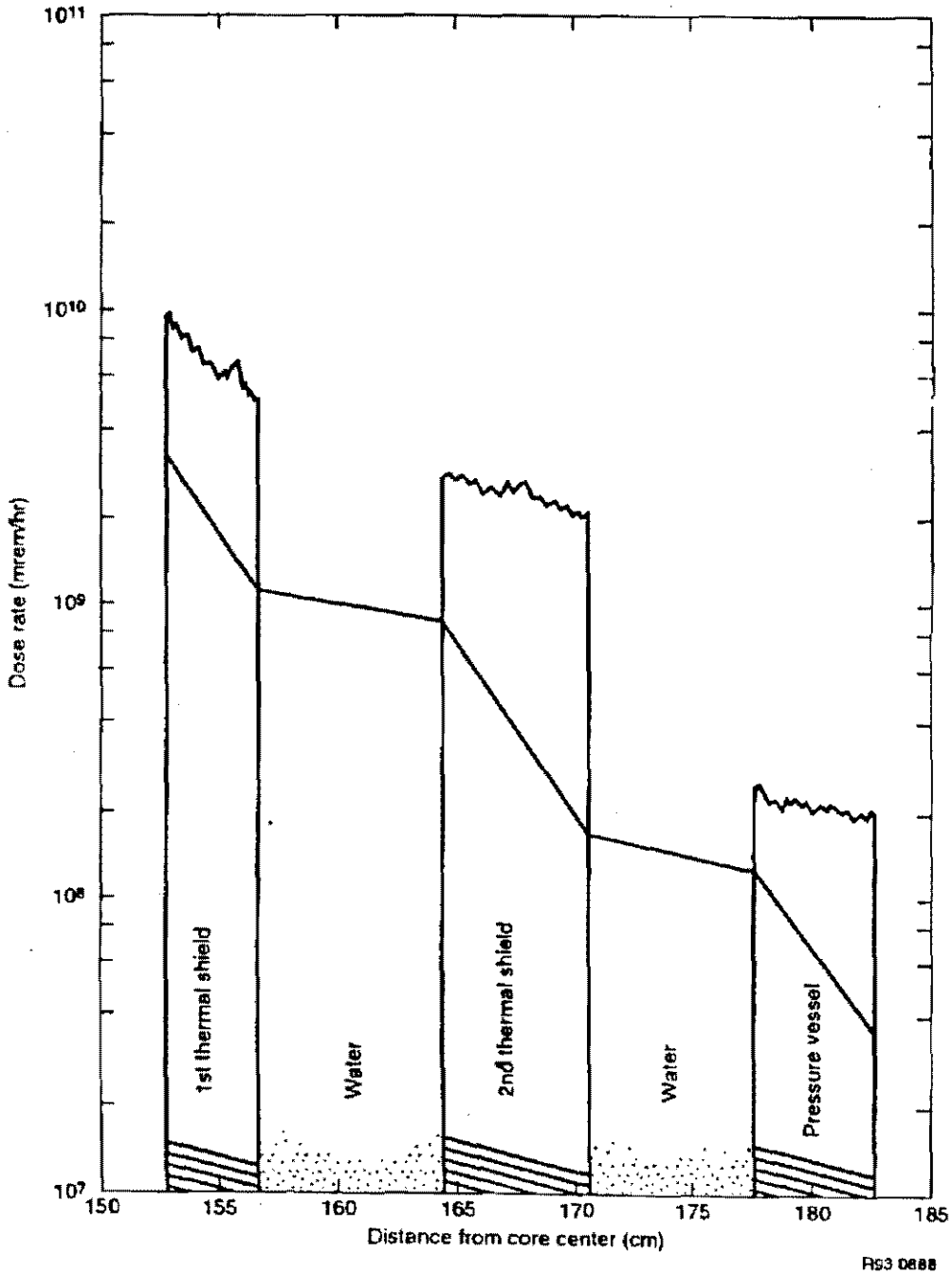

Figure 12.4-3. Secondary gamma dose rates along core radial centerline. **(For Information Only)**

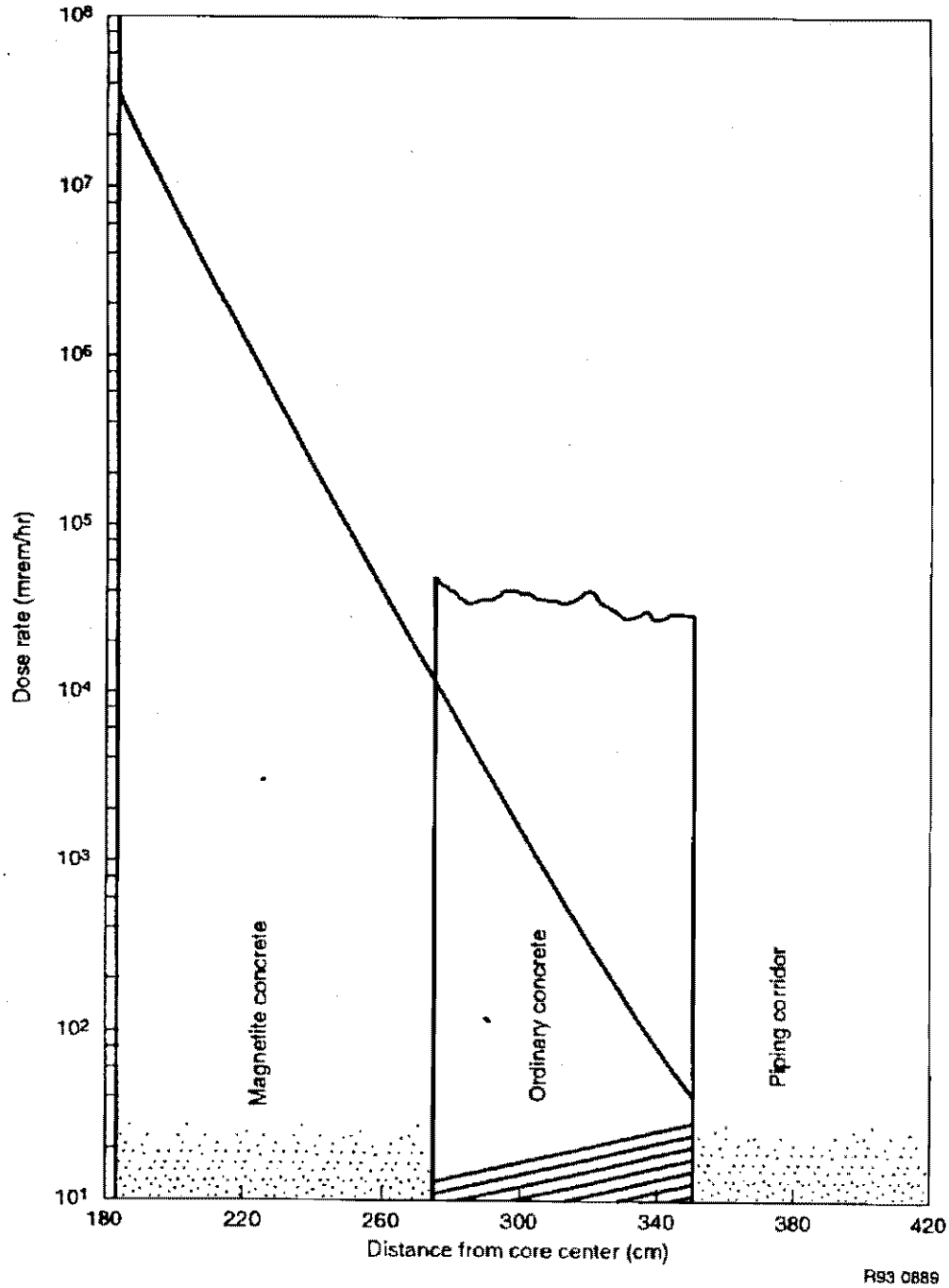

Figure 12.4-4. Secondary gamma dose rates along core radial centerline. **(For Information Only)**

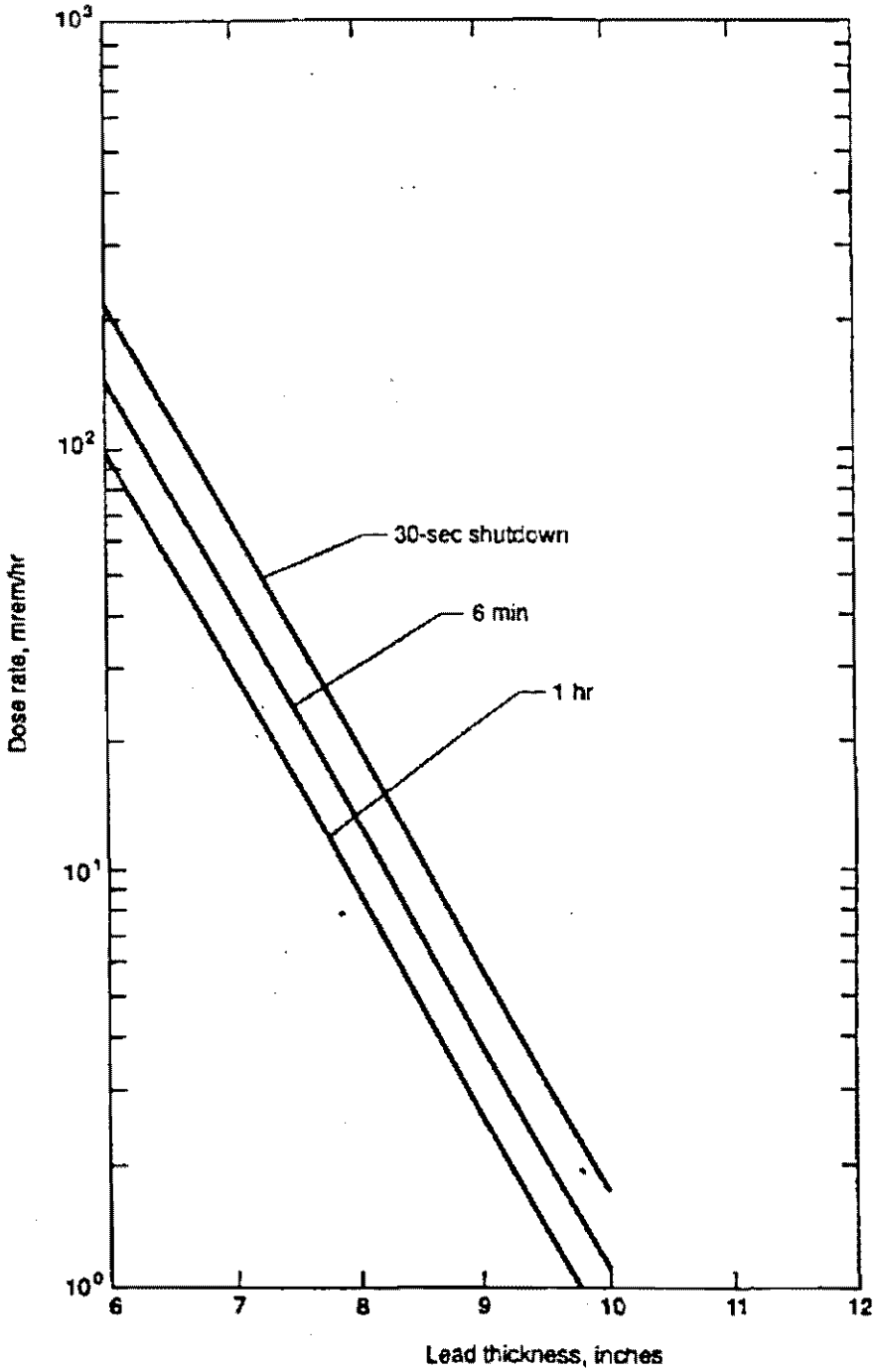

T93 0697

Figure 12.4-5. Dose rates from fission products in loop trap through lead, dose point 1 ft from shield, 4-in. steel and 6-in. polyethylene shields included. **(For Information Only)**

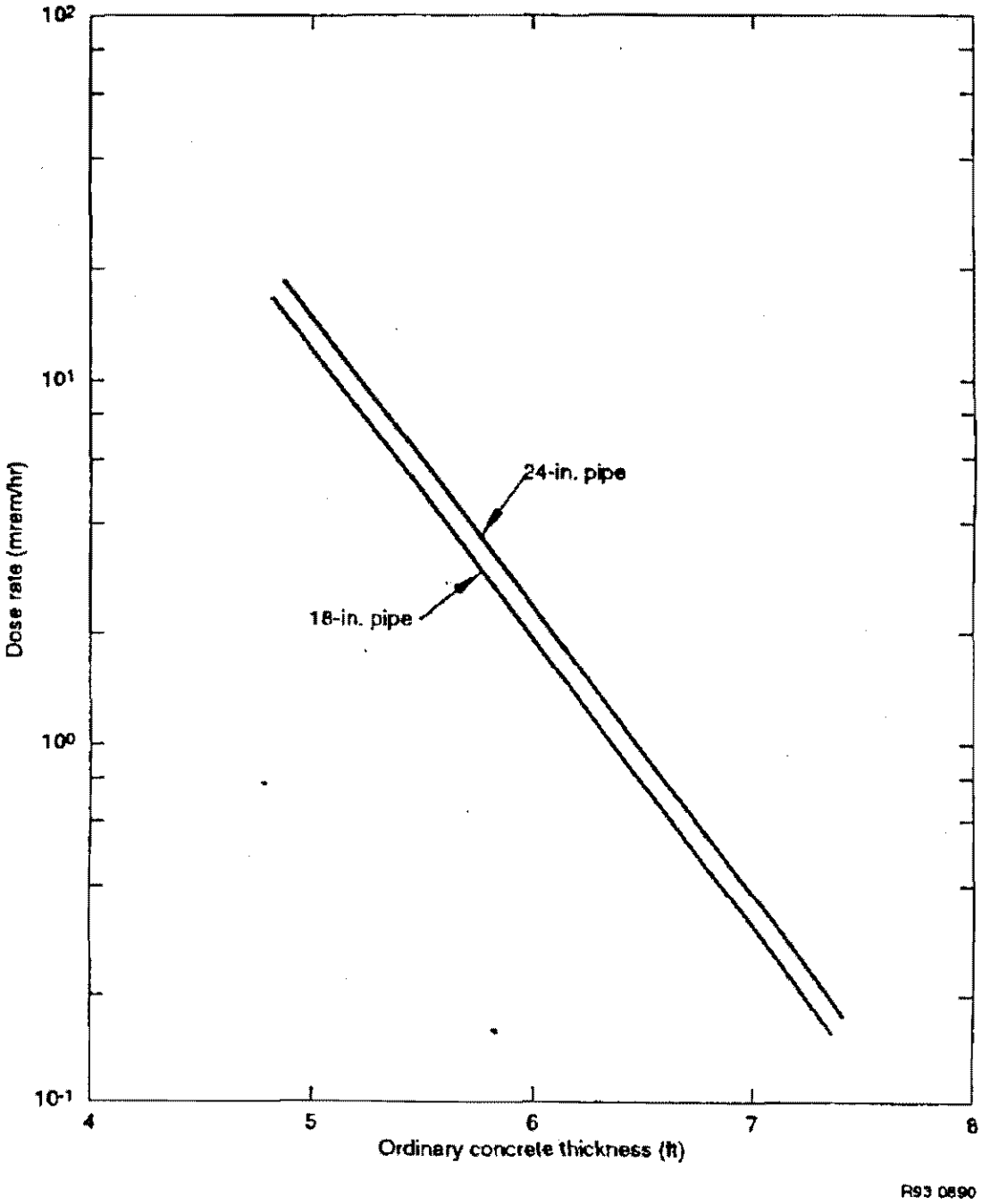

Figure 12.4-6. Dose rates at outer surface of piping corridor shield from single infinite-length primary pipe. **(For Information Only)**

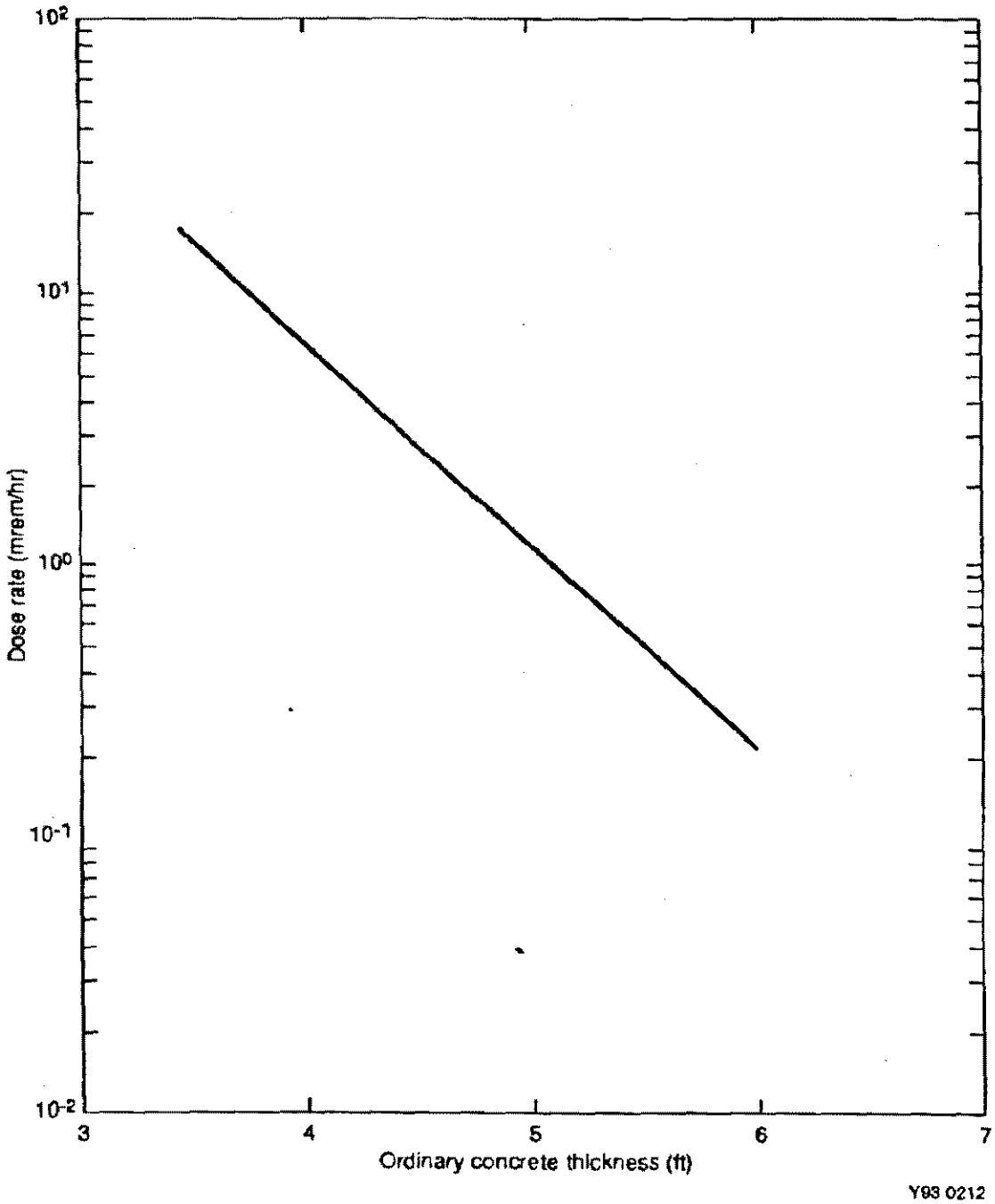

Figure 12.4-7. Dose rate from a primary pump through concrete shield wall. **(For Information Only)**

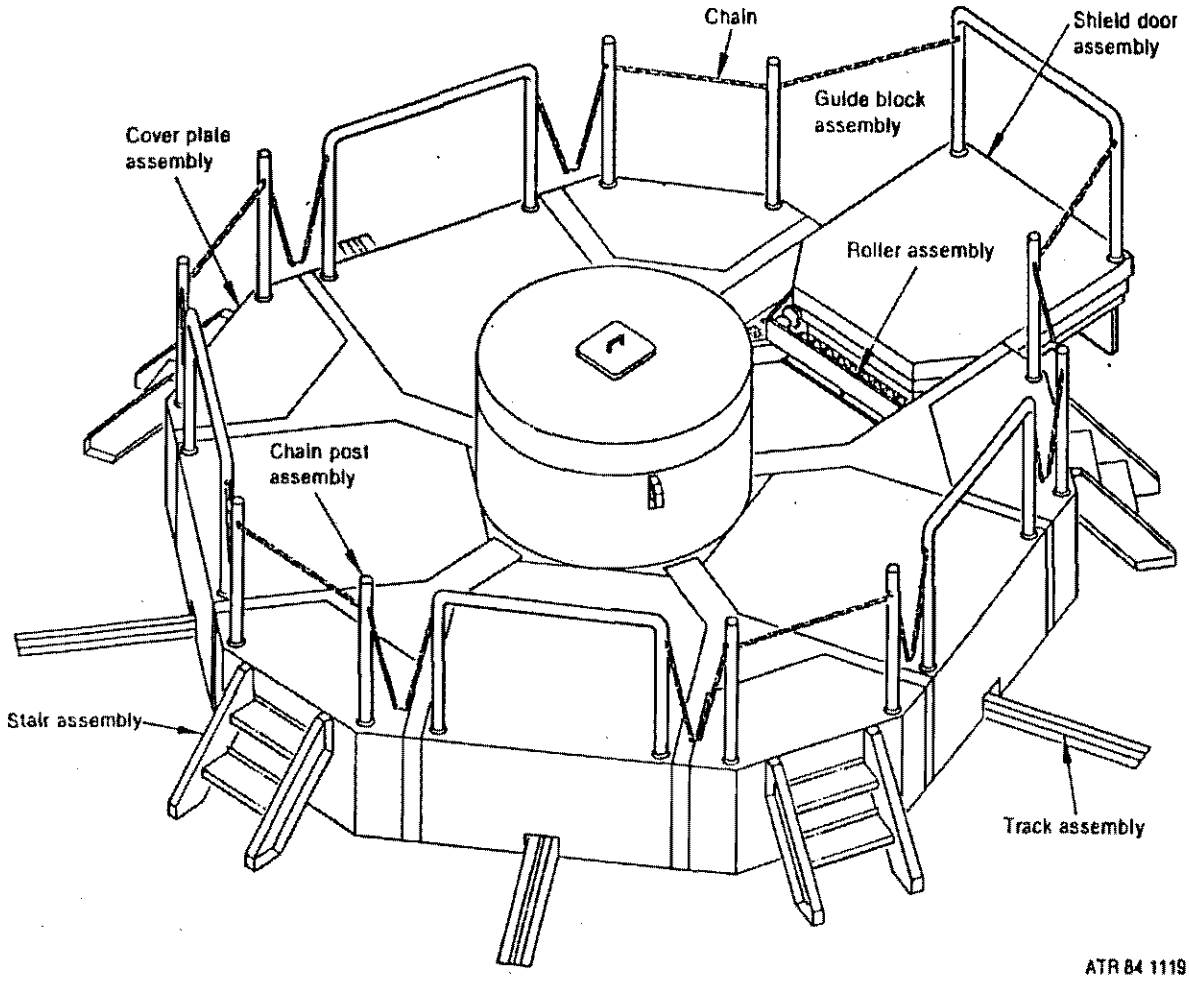

Figure 12.4-8. Reactor top shielding general arrangement. **(For Information Only)**

12.5 Ventilation

This section discusses the ATR ventilation system and its function in radiation protection. A brief summary description of the confinement structure and associated ventilation systems is provided. This is followed by a discussion of the major ATR radiation protection system (i.e., the Radiation Monitoring System, its protective functions, and the radiation monitors and ventilation system interlocks associated with its functioning).

12.5.1 Ventilation Design Philosophy

The design philosophy of the ventilation system from a radiation protection viewpoint is based on its function to (a) prevent an uncontrolled release of airborne radioactive contamination from the ATR building and (b) minimize the dispersal of activity from one area to another within the building.

The ATR confinement structure is designed to delay the release of fission products from a severe accident involving the reactor primary system and installed experiments, by providing a resistance to radioactive material releases at low pressure when a sealing system is activated.

12.5.2 Confinement Areas

The confinement areas (deBoisblanc and Cohen 1965), illustrated in Figures 12.1-3 to 12.1-5 and 12.3-1, are those areas where an accidental radioactive release from the reactor or loop experiments must be contained, or where sealed penetrations from such an area to an otherwise "clean" area would be difficult to maintain during normal operation. Approximately 46,440 m^3 (1.64×10^6 ft^3) or 62% of the total building volume is included.

12.5.2.1 Ventilation Systems. The ATR ventilation system, as illustrated on figures in Chapter 9 (Auxiliary Systems), is not an engineered safety feature. ATR uses a ventilation system, including all associated components, to control confinement atmospheric conditions during normal operation. ATR's ventilation system couples the supply and exhaust fans to prevent starting one system without the other.

In case of high radiation in the confinement, the RMSS, which is an engineered safety feature, will seal the confinement, thereby mitigating the consequences of the release of fission products within the confinement.

12.5.2.1.1 General—Ventilation for the principal working areas in the building is sectioned to minimize the dispersal of activity from one area to another. The individual ventilation systems are independent of each other and generally may continue or discontinue operation without affecting other spaces.

12.5.2.1.2 Criteria for Confinement Ventilation—In view of the importance of maintaining the integrity of the confinement in the event of a release of activity, special criteria have been established for that portion of the ventilation system serving this area.

The confinement is served by three supply systems as follows:

A. Reactor area supply

B. A branch from the utility area supply that feeds the first and second basements

C. Control room air conditioning.

These systems and their associated dampers will be closed on a high activity signal from the RMS located in the reactor area, exhaust plenum, or stack. Since the control room is within confinement, it may not remain habitable following an accident; the closure of dampers due to a high radiation signal will stop ventilation of the control room. In this event, operating personnel would evacuate the control room to limit dosage. Required actions for shutdown of the reactor can be performed quickly and do not require the operator to remain in the control room for an extended period of time. The setting for the building seal system is considered in Chapter 15, and provides an upper limit on the dose received by operating personnel during an evacuation as a result of significant release of fission products to the primary coolant system.

12.5.2.1.3 Operating Auxiliary and Radwaste Areas Ventilation System—Chapter 9 (Auxiliary Systems) describes the ventilation and air treatment for the operating areas, storage canal, and waste area. The heating, ventilating, and air conditioning systems for the reactor building are shown in Chapter 9's figures. The operating areas include the reactor operating area and basements. This includes those areas of the reactor building inhabited by operating personnel during reactor operation and control, the primary and secondary reactor cooling systems, and the experiment loops.

The ventilation stack is 250 ft high to allow a good dispersion of effluent for radiation protection. It is a tapered, unlined, reinforced concrete structure, which handles 64,800 ft^3/min of exhaust air at a maximum temperature of 105°F. The stack is approximately 300 ft northwest of the ATR building. The inside diameter of the stack is 5 ft at the top, resulting in a discharge velocity of 3,300 ft/min, which permits good mixing with atmospheric air and excellent wind carry-off.

The degassing tank is maintained at a negative pressure through the use of exhaust fan HVE-18, which draws air from the primary heat exchanger area through the tank. The fan normally discharges the exhaust gasses to the Argon Delay Line System. The Argon Delay Line System can be bypassed which routes the fan discharge directly into the plenum of the main exhaust system. The purpose of the Argon Delay Line system is to reduce annual release of short-live radionuclides released from the main stack. The system provides a large hold tank volume that permits decay of short-lived radionuclides released by the degassing process. A beta--gamma monitor is used in the degassing system to sound an alarm on high activity level.

The primary heat exchanger area is ventilated by exhaust fan HVE-4, which draws air in from the basement and discharges into the main exhaust system. This fan prevents backflow of contaminants from the primary heat exchanger area to the basement and also ensures proper airflow direction in the primary coolant pump motor area.

12.5.2.2 Radiation Monitoring System. The purpose of the ATR Radiation Monitoring System (RMS) is to measure, indicate, and warn of the presence of radiation at various locations within the ATR building and to control ventilation equipment for radiation release control at preset radiation levels. Thus, the RMS provides the basis for appropriate action to be taken by cognizant plant personnel. As the locations and setpoints of some radiation detectors and monitors may change, a listing of the monitors, their locations, and setpoints is not included in this document. This information is found in ATR Detailed Operating Procedures and Operating & Maintenance Manual chapters.

12.5.2.2.1 RMS Protective Functions—During normal operation, the ventilation system functions to purge the confinement area. This creates a negative pressure within the confinement with respect to atmospheric pressure, and directs exhaust flow from areas normally occupied by reactor operating personnel during operation. Flow is from clean to contaminated areas, through the building exhaust system, and out the waste gas stack. It should be noted that the purge function does not perform an essential protective function. However, it does provide a describable degree of personnel protection. It also serves to relieve any possible pressure buildup in the confinement area that might accompany a radioactive release.

Upon alarm of a sufficient number of stack radiation monitors, indicating the release of radioactive material to the environment, the RMSS functions to isolate the confinement. Isolation consists of automatic actuation of a sufficient number of ventilation penetrations of the confinement boundary to ensure a building leak rate less than or equal to 100% of the confinement volume per day to the atmosphere, for the bounding accident conditions.

12.5.2.2.1.1 Stack Radiation Monitors—The stack exhaust radiation monitors are part of the RMSS. The isolation system is an engineered safety feature for control of significant releases of airborne radioactivity from the ATR building.

The setpoint for the stack exhaust monitoring subsystem is based on radiological doses provided in Peterson (1995b). The analysis determines the field in the stack breech that would result in a thyroid dose that is less than 300 rem to a person located at a distance of 10,000 m from the ATR facility. Worst-case meteorology and conservative assumptions regarding exposure time are assumed. The resulting calculated limit for the stack monitor is 350 mR/hr. For conservatism, 315 mR/hr is used. Because this setpoint will actuate the confinement seal, the actual dose at the location considered would not approach the limiting value of 300 rem.

12.5.2.3 Area Radiation and Airborne Radioactivity Monitoring Instrumentation. This subsection discusses the types of monitoring instrumentation and their performance characteristics used in the ATR RMSS and Radiological Control monitoring systems. The minimum radiation and airborne radioactivity monitoring instrumentation requirements were evaluated and defined in Grant (2002a) and Grant (2002b). The minimum monitoring requirements are based on consideration of possible accident conditions in various facility locations and are intended to alert personnel in the event of abnormal conditions where individuals could receive doses in excess of plant protection criteria.

12.5.2.3.1 Digital Radiation Monitoring System (DRMS) RAMs—The Digital Radiation Monitoring System (DRMS) provides information of radiation dose rate levels, airborne radioactive particulate levels, radioiodine levels, and radioactive noble gas levels in the ATR. The system RAMs have a maximum range of 0-2,000 R/hr.

Total system information from all local Data Acquisition and Control Modules (DCMs) is available at two Radiation Control Unit color display terminals in the ATR RCT office, and two remote terminal computers.

All DRMS RAMs have the potential for three alarm points. Setpoint 1 is an ALERT, Setpoint 2 is an ALARM, and Setpoint 3 was designed to be used on RAMs for the TRA evacuation system. However, Setpoint 3 is currently disabled for all RAMs. The evacuation system operation is discussed in Section 12.5.2.3.2. All setpoints are adjustable over the entire detector range. The RAMs are equipped with local alarm and readout. In addition, alarm and readout capabilities are available in the RCT office and the reactor control room.

12.5.2.3.2 Evacuation System RAMs—The evacuation system functions to alert control room operators and radiological control personnel of a condition that may warrant evacuation of the facility, in order to minimize exposure to personnel. The system provides no protective function other than a warning. Based on information from the affected RAMs and other plant conditions, the shift supervisor may then manually initiate an evacuation from the control room. Eight of the DRMS RAMs are associated with this function. RAMs are selected based on the assumption that alarms from at least two instruments separated by distance and facility structures, indicates an event in progress that affects a large portion of the facility. RAMs are arranged in three groups, two groups for the facility and one group for the waste gas stack. The alarm trips are generated from pulse counters in the respective Data Acquisition and Control Modules (DCM) for each RAM. The pulse counters take their signals directly from the detector, separate from the DRMS software and communication system.

The following channel groups are used to actuate an evacuation alarm in the control room:

DRMS RAM 5, 6, 23	Group A Evacuation
DRMS RAM 2, 13, 24	Group B Evacuation
DRMS RAM 34, 35	Stack Monitor.

The logic to initiate the evacuation signal is as follows:

Two of three setpoints exceeded, Group A, or

Two of three setpoints exceeded, Group B, or

Either setpoint exceeded, Stack monitor.

12.5.2.3.3 High Level Radiation Monitoring System—The High-Level Radiation Monitoring System (HLRMS) is used to detect and measure radiation levels in the confinement area that would result from any reactor accident up to the levels expected from a maximum hypothetical accident. The HLRMS has a readout in the RCT office. A signal is tied into the RDAS; however, the RDAS will not survive high radiation fields since it is not a radiation hardened system. The monitoring system is capable of measuring up to 10^8 R/hr. The unit electronics is voltage calibrated for the range 10^0 to 10^8 R/hr, which encompasses the maximum gamma field expected in a maximum hypothetical accident. Instrument response checks are performed at specified intervals.

12.5.2.3.4 Fission Break Monitors—The fission break detection system offers rapid reactor protection in the event of a gross fission break in the reactor core. The gamma-sensitive ion chamber is located on the wall of the primary pipe space near the 40-ft elevation. The normal background at the chamber will be primarily from the N-16 formed in the primary coolant water. A fission break in the core will release gamma emitters to the coolant stream and increase the radiation levels at the chamber. This increase is monitored by the detector chamber and displayed in the reactor control room.

The fission break system is a subsystem of the Plant Protective System. The subsystem consists of three separate identical channels. Each channel consists of a gamma ionization chamber, check source, lead shield, high-voltage power supply, and linear picoameter.

12.5.2.3.5 Continuous Air Monitors—Continuous Air Monitors (CAMs) are in place to detect radioactive airborne particulate in plant air. There are currently two systems in place that monitor airborne activity. On some occasions, work in specific areas will be under the requirements of a RWP. The RWP will specify the airborne radioactivity monitoring requirements.

12.5.2.3.5.1 RMSS CAMs—Two RMSS CAMS are tied into the plant interlock system. Actuation of either of these CAMs will cause the ventilation in the canal to be secured. The CAMs provide visual and local alarms and are annunciated in the reactor control room. Information is also transmitted and recorded in the RCT office.

12.5.2.3.5.2 Digital Radiation Monitoring System (DRMS) CAMs—The DRMS is used to detect airborne particulate in plant air. There are two types of CAM units on the DRMS, PIN (Particulate, Iodine and Noble gas) and PI (Particulate and Iodine) CAMs. Some of the DRMS CAMs are mobile units. Each CAM channel (P, I, and N) has the potential for three alarm levels, set in concentrations of μCi/ml. The three level alarms are ALERT (Level 1), ALARM 1, and ALARM 2 (Level 2 and Level 3). All levels are adjustable over the entire range of 0 to 1×10^4 μCi/ml. The CAMs provide visual and local alarms and readouts and are annunciated in the reactor control room and the RCT office. Information is automatically transmitted and recorded in the RCT office.

12.5.2.3.5.3 Airborne Effluent Monitoring Basis—The requirements on airborne effluents are derived from the requirements of current DOE and DOE-ID orders and guidance documents.

Stack effluents are continuously monitored using a self-contained radiation detection system. Gaseous and particulate effluents are normally discharged through the stack. The SPING is configured to monitor, record, and alarm on noble gases, iodine, and particulate stack release rates separately. The Stack Effluent Real Time Monitor also provides continuous online monitoring and isotopic analysis of stack effluents. Manual sampling and laboratory analysis are also available

The action levels and alarm setpoints for the ATR Stack Effluent are included in Chapter 12 (Radiological Protection) because it is a significant source of anticipated dose to facility and off site personnel (DOE 1993; Wagner 1995).

The baseline daily release rate used as a basis for actions is established annually. The specified action levels for stack effluent release rates are consistent with requirements.

The first level of action is set to 3 times normal for gases and 10 times normal for iodine or particulates. These are sufficiently above normal to identify a potentially abnormal fuel element or experiment condition, and are also high enough to minimize unnecessary actions.

The second level of action is established at 20 times the normal baseline to ensure actions are taken prior to reaching the dose limits for the public.

The third and highest action level is consistent with limiting doses to members of the public due to ATR airborne effluents to the most restrictive of the DOE offsite radiation protection standards for airborne releases, which is the 10 mrem/yr EDE from airborne releases (DOE 1993). The limits in this action level are based on simple yet conservative dose calculations (Wagner 1995).

Normally, a planned release would not be expected to reach 20 times the normal baseline. However, in the event it becomes necessary to initiate any planned release of 20 times the normal baseline or greater, any such release will be treated consistently with unanticipated releases. Should a release of 20 times the normal baseline be required, an evaluation(s) and reporting will occur.

Annual off-site doses were calculated for each radioisotopic category (i.e., noble gases, iodines, and particulates) in typical ATR stack effluents. The calculations were determined using requirements in place at the time (10% of 25 mrem/yr) that were more restrictive than current limits. The limit for each isotopic category was established by scaling the effluent resulting in the typical annual dose up to the annual dose limit. The 2.5 mrem/yr effective dose equivalent is reached with an average release of 450 Ci/day of noble gases or 24 Ci/day of iodine or 620 Ci/day of particulates for 365 days per year (Wagner 1995). The setpoints and the high action levels were based on the results of these calculations. The setpoints and maximum action levels are 100% of the noble gas value and 1% of each of the iodine and particulate values from the dose calculations. These setpoints are consistent with the typical mix of airborne effluents from ATR, and ensure that the total dose from all isotopic categories does not exceed 2.5 mrem/yr.

The above calculations indicate that a total release of 162,000 Ci of noble gases over a 1-year period or a continuous average monthly release of 13,500 Ci/month of noble gases results in maximum annual doses to the public of 2.5 mrem. Monthly averaging is allowed, thereby permitting flexibility to evaluate the average daily release over a 1-month period and the importance of the experimental data to justify continued reactor operation.

Onsite doses to a maximally exposed worker resulting from the above daily effluent release limits were shown (Wagner 1995) to be a small fraction of the annual federal limit of 5 rem (TEDE) for occupational exposures from DOE activities. The maximally exposed worker is defined as a person who is downwind and at a distance from the stack where the concentration in the plume is the highest for the work year. This calculation is conservative because wind speed and direction are variable, and it is therefore not credible for an individual worker to be exposed to the maximum concentration for a total work year.

12.5.2.3.6 Whole Body Monitors and Survey Stations—Personnel Contamination Monitors and/or contamination detection devices appropriate to the nature of contamination are deployed at areas adjacent to Contamination, High Contamination, or Radiological Buffer Area exits in areas of sufficiently low background radiation.

Table 12.5-1. Environmental conditions.

		Abnormal		
RAMs	Normal	Confinement Area	Health Physics Office	Storage
Radiation	0 to 10 mR/hr	T_o to + 1 hr: 10^6 R/hr 1 hr to + 24 hr: 6×10^4 R/hr	10^3 R/hr maximum	0 to 1 mR/hr
Water (humidity)	20 to 90% RH	Main floor and first basement: 100% RH + water spray + local floor flooding Second basement: 100% RH + water spray + floor flooded to 0.25-m depth	100% RH	0 to 99% RH
Pressure	12 to 14 psi	0.25 psi differential pressure (building design)	No special requirement	12 to 14 psi
Temperature	70 to 106°F	32°F minimum T_o to 1 hr < 205°F 1 hr to 24 hr < 140°F	No special requirement	-29 to 151°F

12.6 Dose Assessment

12.6.1 Anticipated Dose Rates

The radiation designation for an area is determined by the maximum expected whole-body dose rate that should be experienced in that area, whether from sources of radiation located within or external to the area. Radiation areas are designated and controlled in accordance with the radiation-protection program described in the following section. Maximum radiation doses are not expected to occur, and indeed are not ascribed to, as a result of normal operation. The highest doses in the plant occur in rooms containing equipment and pipe handling radioactive fluids.

Shielding, as described in preceding sections of this chapter, is used to maintain much of the plant within the lowest radiation levels. Also, ATR operational experience indicates that the measured radiation levels are usually considerably less than those used for shielding design objectives, for controlling radiation doses. Therefore the annual radiation doses received by plant personnel are well below federal limits specified in 10 CFR 835.

In addition to exposure from continuous radioactive sources (direct exposure), radiation exposure within the plant from airborne radioactivity is possible. Occupational exposure from these sources is insignificant at the ATR in comparison to that contributed by direct radiation. Ventilation systems continuously direct air from areas of lesser radioactivity to areas of greater radioactivity and potential contamination levels are monitored and controlled. Area monitors and radiological surveys also aid in the control, and minimization of personnel exposures, so that the contribution of airborne radioactivity to the total person-rem exposure is insignificant in comparison with that exposure contributed by direct radiation.

Normal operation radiation exposures contributed by direct radiation sources located outside of the ATR, excluding other site structures and operations not considered in this safety analysis report, are minimal. This corresponds to the limited number of radiation sources in the area. An examination of the historical exposure from the ATR from 1995 to 2001, described in the following sections, indicates that the total exposure from the ATR is provided essentially by the occupational exposure from direct radiation within the plant structures.

It is anticipated that the control room and the normally occupied areas will maintain a maximum allowable dose rate that is well within the limits, based upon an extrapolation of the historical operating experience since 1986, as discussed in the following section.

12.6.2 Exposure of ATR Facility Personnel

The ATR achieved initial criticality on July 2, 1967, and has been operating since then. For this reason, ATR operating experience has been examined to determine the current annual personnel exposure and to indicate future exposures, based upon an extrapolation of current trends. The period encompassing 1995 to 2001 was chosen to best represent typical modern ATR operation and current radiation-protection practices. This period includes 59 operating cycles, several major equipment modifications, and sufficient information to "highlight" any positive or adverse trends.

Table 12.6-1 presents a summary of the personnel exposures due to normal operations and those due to other activities, including maintenance on a daily or annual basis for the period reviewed. It should be recognized that the information presented is conservative and "bounding" with respect to ATR contribution. This is due to the inclusion of information from other facilities, located at the TRA, in the database. These facilities do not include other operating reactors or projects that currently provide, or are anticipated in the future to provide, a significant contribution to the aggregate exposures received by personnel at the TRA. As many personnel receive radiation exposures during performance of their workday activities from these multiple facility sources, the current practice is to maximize operational efficiency and attempt to develop a system to record and allocate individual personnel exposures explicitly to the separate facilities at the TRA site. It should be noted that for many discrete activities, the present radiological control program does explicitly control and record personnel exposures.

It should be recognized that the dose rates presented provide a baseline of those expected for ATR operation and associated activities. Variations in the working force, radiation levels, unplanned maintenance, repair work, etc., may result in different exposures in the future as they have in the past. The exposures presented are expected to provide a reasonable upper bound to those expected during normal operation. The 10 year trend from 1993 to 2002 is shown in Table 12.6-1. The table indicates an initial decrease in the daily exposures for ATR operations personnel followed by a steady rate at 0.1 mrem per operator for each day. The daily exposure is not likely to decrease significantly below that level.

Table 12.6-1 summarizes the estimated annual dose contribution from the ATR to plant personnel. The assumptions in the estimate are as follows:

Dose to operations personnel in these years does not include the larger doses that accompany a Core Internals Changeout (CIC) outage and therefore better reflect a normal year of operation.

Collective dose is a function of all doses from ATR operations during the year, including maintenance and outage operations. The daily exposures for this category are derived from the collective dose, divided by the number of days in a year. The dose must then be divided by the number of personnel working on a specific day, to determine the individual daily exposures.

Normal operations daily exposures are based on annual dosimeter data for ATR operations personnel, divided by the number of personnel with a positive recorded dose and by the number of days the reactor was operated for the year.

Technical staff personnel are included in the values only if they receive a positive recorded dose for the year. In general, their collective radiation exposure is negligible, based upon an examination of the historical data.

The technical staff spent most of their time in uncontrolled areas where the radiation levels are sufficiently minimal to not require administrative controls. For example, the engineers will be involved in office work. Likewise, radiological engineers and radiological control technicians will spend a considerable portion of their work time in offices. The latter, however, will be engaged in periodic plant surveys and be present during many maintenance operations. Approximately one-third of a radiological control technician's shift may be spent in laboratory work and collecting certain samples.

12.6.2.1 Normal Operation. Exposures received for normal operation are estimated to be those primarily due to reactor operation and surveillance. An assumption is made that control room operation, radiochemical laboratory work, and office work result in negligible exposures. Therefore, the exposure attributed to reactor operation and surveillance stems primarily from routine patrol of ATR areas housing potentially radioactive equipment; from periodic tests; and from operations and work activities (excluding those work activities that entail assembly, disassembly, and repair between operating cycles, which are then classified as maintenance activities).

Reactor operations and surveillance activities include local operations such as valve alignment, starting and stopping pumps, patrolling, operation of the radwaste system (but not the actual handling of the solid wastes), sampling, radiation and contamination surveys, and occasional lubrication.

12.6.2.2 Maintenance/Incidents/Other Activities. These activities include preparation for operating cycles, refueling, test-sample preparation, and associated test-sample handling and evaluation at the ATR. Estimated exposures from other than normal operating activities reflect the residual from that attributed to normal operation activities and any incidents/deviations occurring in the time period evaluated. The large number of operating cycles (59) during the 7-year historical time period examined indicates that most maintenance activities are essentially inseparable from normal operations. This is in contrast to the standard commercial nuclear power plant in which the operating cycle (between refueling outages) is approximately 1-1/2 to 2 years in duration and further subdivision of personnel exposure sources, the current practice, is of greater usefulness and relevance. The method followed in this safety analysis report is to determine the personnel-exposure contribution from maintenance, incidents, and other activities in excess of those explicitly associated with normative activities. Recourse to an examination of historical operations and health physics logs was made to develop and apply criteria used in the personnel-exposure data evaluation and to determine the effect and presence of incidents.

12.6.3 Dose Assessment Summary

ATR exposure data for 1993 through 2002 is shown in Table 12.6-1. The daily doses are not expected to change significantly from these levels in years where no CIC outage is scheduled. During the last CIC the collective dose was 46.6 rem with doses being significantly lower for the years following CIC. Personnel exposures from other activities, including maintenance between cycles, are variable and highly dependent on major maintenance and modifications that are planned for the year. It should be noted that the 1997 to 2001 results are somewhat higher than the 1995 and 1996 values. Doses in 1998 were higher due to the major personnel exposures accumulated in replacing the 2B-SE loop line heaters. The numbers from 1999 are also somewhat higher due to the large doses associated with modifying the 1A primary loop cubicle to install the Multiple Irradiation Capsule Experiment (MICE) infrastructure. The 2000 and 2001 collective doses are elevated slightly due to major work associated with the 2E-NW loop recirculating pumps. In 2002 the collective doses reflect the change out of a flux trap baffle.

Table 12.6-1. Dose assessment.

Normal operation personnel exposure[a]					
Year	Operating days	Daily (mrem)	Annual (mrem)	Other activity daily personnel exposure[c] (mrem)	Collective doses[b] (rem)
1993	137	0.3	100	87	31.7
1994	156	0.3	118	127	46.6
1995	296	0.2	70	19	7.1
1996	291	0.1	52	16	5.9
1997	289	0.1	39	33	12.1
1998	219	0.1	32	44	16.1
1999	250	0.1	33	46	16.8
2000	277	0.1	45	36	13.0
2001	241	0.1	46	36	13.1
2002	271	0.1	49	38	13.9

a. The doses presented in the Normal operation portion of this table are person-equivalent doses for workers whose normal assignment is at the ATR (i.e., shift workers).

b. Collective doses are the total doses of all personnel, including permanently assigned and transient workers, which worked at the ATR during any part of the indicated years.

c. Daily exposure for an average day, for all personnel. This value must be divided by the number of personnel working during the day to derive individual daily exposures.

12.7 Radiological Control Program

The ATR facility management provides a safe work environment within the facility and assigns responsibility to all management levels for implementing a radiological control policy in which there should be no occupational exposure of workers to ionizing radiation without the expectation of an overall benefit from the activity causing the exposure.

The radiological control program at the ATR facility is based on 10 CFR 835. The requirements of 10 CFR 835 and the Contractor's radiological control policies and procedures are implemented through the Contractor's Radiological Control Manual and associated procedures. Radiological control staff evaluate and monitor radiological conditions of operations at the facility and establish the radiological procedures to be followed by all personnel. They provide assurance that all applicable regulations are complied with and that all required radiation protection records are adequately maintained.

The radiological control program implementation at TRA handles Radiological Work Permits, ALARA committee reviews, and post-job evaluations in a standard manner and without regard to specific experiments or facilities at TRA.

The TRA Radiological Control program currently reports to the Environmental, Safety & Health Manager who reports to the Director of Reactor Programs.

12.7.1 The ALARA Policy and Program

DOE Orders 5400.5 (DOE 1993), "Radiation Protection of the Public and the Environment," and 10 CFR 835, "Occupational Radiation Protection," require that radiation exposure be controlled in accordance with the "as low as reasonably achievable" (ALARA) philosophy. This requirement is implemented at the facility through the Contractor's radiological control program.

The ALARA policy at the ATR facility is to maintain occupational radiation exposure as far below limits as is reasonably achievable. An aggressive approach is used at the facility to keep radiation exposures to the minimum amount practicable, consistent with job/program needs and associated costs. Employee ALARA goals and organizational level goals are established, and the associated records are maintained.

12.7.1.1 ALARA Design Criteria. ALARA principles are an integral part of proposed modifications to existing buildings involved in radiological environments. Although DOE limits allow radiation fields of 0.5 mrem/hr in continuously occupied areas, continuing efforts during the design/upgrade process are necessary to ensure exposure rates are consistent with ALARA objectives.

The best available technology, including cost-versus-benefit analysis for dose reduction, is used and documented in the design process. The primary means for maintaining ALARA exposures are through physical controls (e.g., confinement, ventilation, remote handling, and shielding).

Maintenance, decontamination, and decommissioning needs are also considered during the design/upgrade phase and material selection.

12.7.2 External Radiation Exposure Control

10 CFR 835 and 5400.5 (DOE 1993), supplemented by the Contractor's ALARA goals, establish the external radiation exposure limits. The Contractor's *Radiological Control Manual* and associated procedures provide practices used at the facility for controlling exposures, including radiation surveillance, permanent and temporary shielding, exposure monitoring, and control of access to radiation areas.

ATR facility management ensures that exposure of employees and visitors to external radiation sources is ALARA and, in all cases, within DOE order requirements.

12.7.3 External Dosimetry

10 CFR 835 requires the use of external dosimetry. The Contractor's *Radiological Control Manual* and associated procedures establish the policy, requirements, and training necessary for an individual to be assigned external dosimetry and determine when dosimetry shall be used at the facility.

External dosimetry encompasses monitoring personnel radiation exposures from sources that are external to the body, including personnel monitoring for routine radiation exposure, area/environmental monitoring, and facility and personnel accident monitoring. External personnel monitoring includes penetrating and nonpenetrating radiation contributions to a person's whole body and extremities, as appropriate. External dosimetry is provided by the Contractor's Radiological Control organization. External dosimetry will be accomplished using devices that are accredited by the DOE Laboratory Accreditation Program for the radiation types and categories encountered in the facility environment.

Thermoluminescent Dosimeter (TLD) badges, issued upon entering a radiological control area, monitor external exposure. Results from the TLD badges are compiled in a report for evaluation.

In addition to the TLD badges, ionization chamber direct-reading pocket dosimeters and electronic integrating pocket dosimeters are used. These are specified in Radiological Work Permits and written procedures that control work practices at the facility.

12.7.4 Internal Radiation Exposure Control

Internal radiation exposure at the facility is controlled in accordance with the requirements in the Contractor's *Radiological Control Manual* and associated procedures which provide information to prevent and minimize internal radiation exposures in accordance with 10 CFR 835.

Internal radiation exposure is reduced by engineering and process controls, which are supplemented by administrative controls. Where specific situations cause these controls to be insufficient, respiratory protection maybe required.

12.7.5 Internal Dosimetry

10 CFR 835 specifies, and the Contractor's *Radiological Control Manual* and associated procedures provide the requirements for monitoring personnel for internal exposures.

Individuals working at the facility are categorized by job tasks and exposure potential. Individuals who exceed the Contractor's bioassay trigger levels are included in the bioassay program.

12.7.6 Radiological Protection Instrumentation Programs

10 CFR 835 specifies requirements for radiological instrumentation. The *Contractor's Radiological Control Manual* and associated procedures define the criteria for selection, design, procurement, and installation of radiological instrumentation used at the facility. Also established are the standards and practices for calibration and control. Properly selected, operated, maintained, and calibrated radiological instrumentation is employed at the facility to implement an effective radiological controls program.

The Contractor's radiological control program provides procedures for the calibration, response check, and operational inspection of standard radiological instruments used at the ATR facility.

12.7.6.1 Calibration and Control. Calibration and control for portable radiological instrumentation used at ATR conform to American National Standards Institute (ANSI)-adopted standard of the Institute of Electrical and Electronic Engineers (IEEE), Standard N323A-1997 (ANSI 1997). The standards used for calibrating portable radiological instrument functions are directly or indirectly traceable to a National Institute of Standards and Technology standard.

12.7.7 Respiratory Protection Program

The Contractor's *Radiological Control Manual* and associated procedures provide guidelines for selecting respiratory protection equipment for protection against airborne radioactivity. This procedure incorporates the requirements of ANSI Z88.2 (ANSI 1992), "Practices for Respiratory Protection." Respirators for radiological exposure control purposes are used at the facility in accordance with the Contractor's *Radiation Protection*.

ATR uses equipment approved by the National Institute of Occupational Safety and Health, Mine Safety, and Health Administration. This includes

- Air-purifying, full-face respirators
- Pressure-demand, self-contained breathing apparatus
- Air-purifying, half-face respirators (not for use in the presence of radioactive contaminants without prior approval).

All personnel employed at the ATR facility who use respiratory equipment are formally trained and qualified before using respiratory equipment.

12.7.8 Work Place Air Monitoring

10 CFR 835 requires the monitoring of airborne radioactivity. Monitoring of airborne radioactivity at the facility is performed in accordance with the Contractor's *Radiological Control Manual* and associated procedures.

12.7.8.1 Area Airborne Monitoring System. Ambient air monitoring is performed in occupied ATR facility areas with the potential to exceed levels listed in the contractors *Radiological Control Manual* and associated procedures. Representative ambient air monitoring samples are taken in strategic locations to detect and evaluate radioactive material at work locations. Portable air samples or lapel samplers are used to provide information on breathing zone conditions. The data obtained are used for assessing control of airborne radioactivity in the workplace; it is not normally used to evaluate dose equivalent to radiation workers.

Airborne radioactivity monitoring is performed during work expected to cause airborne radioactivity, when opening radioactive systems, when initially entering confined spaces that could contain airborne radioactive materials.

Any airborne radioactivity detected in occupied ATR facility areas is compared to the DAC values listed in 10 CFR 835. Personnel exposure is controlled for any ATR area where airborne radioactivity exceeds 30% of the DAC listed in 10 CFR 835. Personnel, including the public, who are in uncontrolled areas, are not exposed to radioactivity levels greater than those listed. Personnel exposure to airborne radioactivity is controlled as follows:

When the potential exists for ATR airborne radioactivity levels to exceed 30% of a DAC, ALARA practices are imposed to reduce the airborne activity as much as possible.

Containment of contamination is also used to the maximum extent practicable to prevent ATR personnel from being exposed to airborne radioactivity, as defined in the Contractor's *Radiological Control Manual* and associated procedures, is used to the maximum extent practicable to prevent ATR personnel from being exposed to airborne radioactivity above the limits.

12.7.9 Radiological Monitoring and Contamination Control

DOE Order 5400.5 (DOE 1993) and 10 CFR 835 specify the requirements to ensure control of radioactive contamination. Radiological monitoring and contamination control at the facility is maintained to ensure that radiation exposure and contamination limits contained in the Contractor's *Radiological Control Manual* and associated procedures are not exceeded.

12.7.9.1 Control of Personnel Contamination. External monitoring of the whole body for beta-gamma contamination is required of each person upon exit from an ATR contamination area.

Contamination found on clothing is either contained or the clothing is removed before the employee leaves the survey station. Containment may involve taping or covering to prevent the spread of contamination. The occurrence of contaminated clothing is immediately reported to the individual's manager and ATR radiological control personnel.

12.7.10 Radiological Protection Recordkeeping

Radiological protection records are generated at the facility in accordance with the requirements specified in 10 CFR 835. Inventory, radiation survey, and air-monitoring records are maintained to provide a history of radiological conditions for use in reconstructing exposures at a later time. Records that document the appropriateness, quality, and accuracy of methods, techniques, and procedures in use during any given period are maintained in accordance with Contractor Radiological Control Manual and associated procedures.

12.7.11 Radiological Area Boundaries, Posting, and Controls

Radiological areas at the facility are determined and their boundaries are marked and posted in accordance with 10 CFR 835 and the *DOE Radiological Controls Manual*, which are promulgated at the Contractor's facilities by the *Radiological Control Manual* and associated procedures. Based on survey results, boundaries are defined and areas are posted by trained radiological control technicians following the posting protocol.

12.7.12 Radiological Protection Training

All individuals requiring access to radiological controlled areas within the facility receive training on their responsibilities for safely working with or around radioactive materials and radiation. The training emphasizes the nature of radiological conditions and control of radiation exposure. The level of training is based on each employee's category of involvement with radiological work at the facility and meets the requirements specified in 10 CFR 835 and implemented in accordance with the Contractor's *Radiological Control Manual* and associated procedures.

12.7.13 Entry and Exit Control Program

The radiological entry and exit control requirements for the facility are contained in the Contractor's *Radiological Control Manual* and associated procedures. The manual provides information on the minimum requirements for unescorted entry for purposes of radiation safety at all Contractor-operated facilities at the Idaho National Engineering and Environmental Laboratory.

12.8 References

AEC, 1965, *Health and Safety Design Criteria Manual*, IDO-12044, U.S. Atomic Energy Commission, Washington, D.C., October 1965.

ANSI, 1966, *Practice for Occupational Radiation Exposure Records Systems*, ANSI N13.6-1966, American National Standards Institute, New York, NY, March 14, 1966. (Last reaffirmed in 1989)

ANSI, 1992, *Practices for Respiratory Protection*, ANSI Z88.2-1992, American National Standards Institute, August 6, 1992.

ANSI, 1997, *Radiation Protection Instrumentation Tests and Calibration*, ANSI N323A-1997, American National Standards Institute, April 3, 1997.

CFR, 1998, *Occupational Radiation Protection*, 10 CFR 835, *Code of Federal Regulations*, Office of the Federal Register, November 4, 1998.

CFR, 2001a, *Table A_1 and A_2 Values for Radionuclides*, 49 CFR 173.435, *Code of Federal Regulations*, Office of the Federal Register, August 28, 2001.

CFR, 2001b, *Waste Classification*, 10 CFR 61.55, *Code of Federal Regulations*, Office of the Federal Register, November 2, 2001.

Companywide Manual, *Radiation Protection*.

deBoisblanc, D. R. and S. Cohen, 1965, *Safety Analysis Report Advanced Test Reactor*, IDO-17021, Phillips Petroleum Company, April 1965.

Deloume, F. E., 1958, *Gamma Ray Energy Spectra from Thermal Neutron Capture*, APEX-407, General Electric, Atomic Products Division, Cincinnati, OH, August 1958.

DOE, 1993, *Radiation Protection of the Public and the Environment*, Order 5400.5, Change 2, U.S. Department of Energy, Washington, D.C., January 7, 1993.

DOE, 1994, *Nuclear Safety Analysis Reports*, Order 5480.23, Change 1, U.S. Department of Energy, Washington, D.C., March 10, 1994. (historical)

Goldstein, H., 1959, *Fundamental Aspects of Reactor Shielding*, Massachusetts: Addison-Wesley Publishing Co., Inc.

Goldstein, H. and J. E. Wilkins, Jr., 1954, *Calculations of the Penetration of Gamma Rays*, NYO-3075, Nuclear Development Associates, White Plains, NY, June 1954.

Grant, B. L., 2002a, *Minimum Requirements for Airborne Radioactivity Monitoring at the Advanced Test Reactor*, EDF TRA-ATR-3077, March 11, 2002.

Grant, B. L., 2002b, *Radiation Monitoring Requirements for the Advanced Test Reactor*, TRA-EDF-ATR-1977, August 29, 2002.

Howard, J. O., and Jacks, G. M., 1963, *Advanced Test Reactor Final Shielding Design Report*, SR-129 (Ca-7), Babcock and Wilcox, Lynchburg, VA, December 1963.

Maienschein, F. C., et al., 1958, *Gamma Rays Associated with Fission*, A/Conf. 15/P/670, June 1958.

Mangum, Y. P., Jr., 1956, *Flux from Homogeneous Cylinders Containing Uniform Source Distributions*, NNSD-R-7-4/1, November 1956.

NRC, 1978, *Standard Format and Content of Safety Analysis Reports for Nuclear Power Plants (LWR Edition)*, NRC Guide 1.70, Rev. 3, U.S. Nuclear Regulatory Commission, Washington, D.C., November 1978.

Oak Ridge National Laboratory, *RSIC Computer Code Collection, QAD-CGGP*, CCC-493, Radiation Shielding Information Center (No Date Available).

Perkins, J. F. and R. W. King, 1958, *Energy Release From the Decay of Fission Products*, *Nuclear Science and Engineering*, *3*, June 1993, pp. 726-746.

Peterson, H. K., 1995a, *Controls on ATR PCS Radioactivity Levels*, EDF TRA-ATR-833, LMITCO, January 30, 1995.

Peterson, H. K., 1995b, *Update of ATR RMS GM-34 Gamma Source/Shield Calculations*, EDF TRA-ATR-1022, LMITCO, February 28, 1995.

Rockwell, T., III (Ed.), 1956, *Reactor Shielding Design Manual*, TID-7004, U.S. Atomic Energy Commission, March 1956.

Roy, J. C., and J. J. Hawton, 1960, *Table of Estimated Cross-Sections for (n,α), (n,p), and (n,2n) Reactions in a Fission Neutron Spectrum*, AECL-1181, Atomic Energy of Canada, Limited, Chalk River, Ontario, Canada, December 1960.

Smith, W. R. and M. A. Turner, 1959, *Nuclear Merchant Ship Reactor Shield Design Summary Report*, BAW-1144-1, Babcock & Wilcox Company, August 1, 1959.

Velen, S. R., 1989a, letter to R. T. McCracken, *Bases for Technical Specification 3.4, Secondary Coolant System*, (Issued as EDF-TRA-ATR-905, EG&G Idaho, Inc., December 21, 1993.) EG&G Idaho, Inc., April 12, 1989.

Velen, S. R., 1989b, letter to R. T. McCracken, *Bases for Technical Specification on ATR Primary Coolant Radioactivity*, April 12, 1989.

Wagner, W. D., 1995, *ATR Airborne Effluent Limits*, EDF TRA-ATR-837, LMITCO, March 27, 1995.

CHAPTER 13

MANAGEMENT, ORGANIZATION, AND INSTITUTIONAL SAFETY PROVISIONS

INTENTIONALLY BLANK

CONTENTS

ACRONYMS/ABBREVIATIONS 13-5

13. MANAGEMENT, ORGANIZATION, AND INSTITUTIONAL SAFETY PROVISIONS 13-7

13.1 Organizational Structure, Administrative Controls, Plant Procedures, Configuration and Document Management, and Staffing and Personnel Development 13-8

13.1.1 Organizational Structures, Responsibilities, and Interfaces 13-8
13.1.2 Administrative Controls 13-11
13.1.3 Plant Procedures 13-13
13.1.4 Occurrence Reporting 13-14
13.1.5 Staffing and Personnel Development 13-14

13.2 Training Program 13-17

13.2.1 Development and Evaluation of Training Program 13-17
13.2.2 Processes of Training Development 13-17
13.2.3 Identification and Correction of Training Program Deficiencies 13-17
13.2.4 Compliance with DOE Training Program Requirements 13-18
13.2.5 Evaluation of Training Programs 13-19

13.3 Emergency Preparedness Program 13-20

13.3.1 Purpose 13-20
13.3.2 Philosophy, Objectives, and Organization 13-21
13.3.3 Emergency Plan Description 13-21
13.3.4 Emergency Organization 13-22
13.3.5 Independent Audit 13-25

13.4 Physical Security 13-26

13.4.1 TRA and ATR 13-26
13.4.2 Physical Security 13-26
13.4.3 Personnel Security 13-26
13.4.4 Routine Access 13-26
13.4.5 Security Education 13-26

13.5 Conduct of Operations 13-28

13.5.1 Topics Covered By Operations Manual 13-28
13.5.2 Fire Protection 13-29
13.5.3 Handling of Special Nuclear Materials 13-32
13.5.4 Security 13-33
13.5.5 Review and Audit 13-33

13.6 References 13-35

FIGURES

13.4-1. ATR location inside the TRA 13-27

ACRONYMS/ABBREVIATIONS

ACF	Access Control Facility
ARLFRO	Air Research Laboratory Field Research Office
ATR	Advanced Test Reactor
BAO	Building Access Only
BBWI	Bechtel BWXT Idaho, Inc.
CFA	Central Facilities Area
CFR	Code of Federal Regulations
CSAP	core safety assurance package
DOE	U.S. Department of Energy
DOE-ID	U.S. Department of Energy, Idaho Operations Office
DOP	Detailed Operating Procedure
DAR	Document Action Request
EAL	Emergency Action Level
EAM	Emergency Action Manager
ECC	Emergency Control Center
EG&G Idaho	EG&G Idaho, Inc.
EOC	Emergency Operations Center
ED	Emergency Director
EM	Emergency Management
EP	Emergency Preparedness
EPI	Emergency Plan Implementation Procedures
EPZ	Emergency Planning Zone
ERO	Emergency Response Organization
ES&H	Environmental, Safety, and Health
ESA	experiment safety analysis
ETR	Engineering Test Reactor
INEEL	Idaho National Engineering and Environmental Laboratory
INEEL VIZ	Idaho National Environmental Engineering Laboratory Visualization
INPO	Institute of Nuclear Power Operations
INTEC	Idaho Nuclear Technology and Engineering Center
IRT	incident response team
IRTL	Incident Response Team Leader
LMITCO	Lockheed Martin Idaho Technologies Company, Inc.
MSDS	Material Safety Data Sheet
MTR	Materials Test Reactor
NOAA	National Oceanic and Atmospheric Administration
O&MM	Operating and Maintenance Manual

OR	Occurrence Report
OSHA	Occupational Safety and Health Administration
PRA	probabilistic risk assessment
QRC	Qualification Review Committee
RCRA	Resource Conservation and Recovery Act
RP	Reactor Programs
SAR	Safety Analysis Report
SD	(TRA) Standing Directive
SNM	special nuclear material
SORC	Independent Safety and Operations Review Committee
SP	(RP) Standard Practice
TIM	Training Implementation Matrix
TPM	Training Program Manual
TRA	Test Reactor Area
TSR	Technical Safety Requirements
UFSAR	Upgraded Final Safety Analysis Report
USQ	unreviewed safety question
WCC	Warning Communications Center
WO	work order

13. MANAGEMENT, ORGANIZATION, AND INSTITUTIONAL SAFETY PROVISIONS

This chapter contains an overview of the management organization and institutional safety provisions of the Advanced Test Reactor (ATR).

Section 13.1 describes (a) management functions and responsibilities of each ATR organization; (b) administrative controls with emphasis on safety performance assessment; (c) processes by which the form and technical content of plant procedures are developed, verified, and validated; (d) configuration and documentation management programs for ATR, including the reporting of abnormal occurrences and corrective action; and (e) ATR staffing, including personnel selection, qualification, certification, and development.

Section 13.2 documents the methods used to develop, verify, and validate ATR personnel training. The section describes (a) training process development and testing of the ATR training program, (b) methods used to identify possible ATR training deficiencies, and (c) how the ATR Training Program complies with the U.S. Department of Energy (DOE) Training Program requirements.

Section 13.3 describes the Emergency Management (EM) (Emergency Preparedness) Program and the Test Reactor Area (TRA) implementation of the Program, which ensures the safety and health of workers and protects property and the environment in the event of an operational emergency at the TRA. This program enables the Emergency Response Organization (ERO) to respond to an emergency in a timely, efficient, and effective manner, thus resulting in improved mitigation of consequences. The Program is maintained to ensure adequate response for potential accident scenarios and to provide the framework for responding to accident scenarios not specifically considered.

Section 13.4 describes (a) the physical security of the TRA and ATR; and (b) personnel security, routine access, and security education for TRA.

Section 13.5 describes the conduct of operations at ATR. The 18 chapters in the *Operations* manual correspond to the chapters in DOE Order 5480.19, "Conduct of Operations Requirements" (DOE 2001b). The Contractor tailored the manual for its operations at the Idaho National Engineering and Environmental Laboratory (INEEL), and Reactor Programs (RP) developed supplemental procedures, when necessary, for use at ATR.

13.1 Organizational Structure, Administrative Controls, Plant Procedures, Configuration and Document Management, and Staffing and Personnel Development

This section identifies the responsibilities for the management, organization, and safety institutions involved with the design, construction, and operation of ATR. This discussion includes the considerations for organizational structure, responsibilities, interfaces, and controls necessary for providing adequate mechanisms for safe operation. Administrative controls are described with emphasis on safety assessment. In addition, plant procedures, configuration and documentation management, and essential staffing and personnel-development requirements are summarized.

13.1.1 Organizational Structures, Responsibilities, and Interfaces

13.1.1.1 Organizational Structure. This subsection identifies the RP organizational structure in terms of lines of authority established for the coordination and communication of safety issue discovery, management, and resolution. Independent internal organizational units responsible for providing surveillance over nuclear safety activities at ATR are also identified.

The RP organizational structure is presented and discussed in functional form. RP has specific dedicated technical expertise in safety, including an independent safety review committee, industrial safety, environmental compliance, industrial hygiene, radiological control, criticality safety, fire protection safety, experiment safety, and reactor safety analysis personnel. RP line management is responsible for the overall safe and efficient operation of ATR.

13.1.1.1.1 Independent Review—An independent safety review committee, reporting to and approved by the RP Director, independently reviews concerns that could impact reactor or experiment safety.

13.1.1.1.2 ATR Operations—ATR Operations includes many functions, which are carried out by a staff with expertise in a variety of technical disciplines. A staff of six typically operates the reactor and experiments. These include the following positions: a Shift Supervisor, who is responsible for over all operation of the reactor and the experiments; a Senior Reactor Operator, who is responsible for control room activities during reactor operation and for refueling during reactor outages; a Reactor Operator, who is responsible for surveillance and operation of the reactor controls within the reactor control room; a Senior Reactor Auxiliary Operator, who is responsible for monitoring safety-related equipment outside the control room and for operation of some safety-related equipment outside the control room after certain events; an Experiment Operator, who is responsible for operation of the experiment controls and monitoring alarms when the experiment facilities are being operated; and a Radiological Control Technician (RCT), who shall be available at TRA at all times, except emergencies. Personnel requirements are reduced when the reactor is not operating; however, appropriately qualified personnel are required for fuel handling and operation of reactor auxiliary systems.

13.1.1.1.3 ATR Support—RP has organizations to provide functional support to the ATR. The functional areas include radiological control, safety and environmental compliance, quality-control engineering, construction projects management, maintenance, experiments, electrical engineering, mechanical engineering, nuclear engineering, training, and document control.

13.1.1.2 Organizational Responsibilities. The following subsections identify functional responsibilities of organizations involved with safety aspects of facility design, construction, or operation.

13.1.1.2.1 Independent Review—An independent safety review committee, reporting to and approved by the RP Director, is responsible for carrying out the RP independent safety review requirements of DOE Orders for nuclear safety review.

13.1.1.2.2 Reactor Operations—The ATR Operations Manager is responsible for all aspects of the ATR operation and administration. His responsibilities include ensuring safe and efficient operation of the reactor, experiments, and plant facilities to maximize plant availability and ensuring compliance with all Federal, State, and local regulations.

The ATR Operations Manager ensures that the ATR is operated and surveillances are conducted in accordance with ATR Technical Safety Requirements (TSR). As the primary internal customer for other RP support organizations, the ATR Operations Manager interfaces with other RP managers, the Contractor's support organizations, DOE-ID, and outside review groups to ensure operations are being conducted safely and efficiently in accordance with customer objectives. The Operations Manager develops operating objectives and establishes overall goals for ATR Operations; establishes necessary controls and policies to ensure operations are conducted following approved procedures; and ensures that ATR modifications necessary for meeting regulatory requirements and extending plant lifetime are routinely identified, funded, and acted upon to satisfy projected customer needs.

13.1.1.2.3 Support Organizations—An Environmental Safety & Health (ES&H) Manager is responsible for planning and executing TRA environmental, and health and safety functions. The Contractor's Environmental, and Safety and Health Manuals provide the policies and requirements related to these functions as well as the guidelines to implement and administer the policies. The general goals of RP are to create and maintain a safe and healthful work environment, and to comply with Federal, State, and local regulations in accordance with the Contractor's procedures. Goals are established and performance indicators are in place to ensure that performance in the area of ES&H is measured and continues to improve.

This Manager has the following responsibilities: (a) maintain and implement a routine radiological monitoring program at TRA; (b) ensure environmental protection, management, and regulatory compliance; (c) provide full compliance with contractual and regulatory requirements; (d) provide a workplace free from hazards that may cause illness, serious physical harm, or death; (e) ensure implementation of the Company Emergency Management Program; and (f) establish a TRA Industrial Safety Program that stresses prevention through employee awareness and management planning.

The Quality Assurance Manager is responsible for planning and executing quality functions. The TRA quality-control organization is chartered to (a) independently interpret and incorporate requirements from 10 CFR 830, Subpart A, NQA-1 (ASME 1997 edition), and the Contractor's *Quality and Requirements Management* into TRA documentation; (b) provide inspection services for such items as welding, electrical, and mechanical as defined in quality assurance procedures, and (c) develop the necessary procedures for performing quality-control responsibilities.

RP radiation protection and quality assurance are discussed in Chapters 12 (Radiation Protection) and 17 (Quality Assurance) of this Upgraded Final Safety Analysis Report (UFSAR).

The Maintenance Manager is responsible for the planning and execution of maintenance support work at TRA. Maintenance is performed with the objective of maintaining and upgrading the ATR reactor, experiment facilities, and various ATR support facilities in a safe and efficient manner. The Maintenance Manager also has the following responsibilities: (a) review the execution of the Maintenance Training Program to ensure personnel receive the training necessary to maintain job proficiency; (b) maintain the Preventive Maintenance Program; (c) provide internal surveillance of maintenance activities; (d) provide for the calibration and control of selected reactor plant instrumentation and maintain a process to control measuring and test equipment; (e) identify, prepare, and review mechanical, electrical, and instrument equipment maintenance procedures.

The TRA Engineering Manager is responsible for technical support from Experiment, Nuclear, Mechanical, and Electrical Engineering, and Project Management. An Experiments Supervisor is the primary interface in the coordination and direction of all ATR experiment operation. This supervisor approves and directs all required activities to support the ATR Sponsor's Test Plan. ATR Experiments provides project management, experiment safety analyses, loop and other experiment facility hardware and test performance surveillance, operational documentation, inservice inspections, data acquisition and reports, experiment handling, evaluations of conformance to requirements, and modifications to meet operational or program requirements. TRA Engineering Management provides Nuclear, Mechanical, and Electrical Engineering support to assist in investigation, analysis, and resolution of anomalous ATR behavior. TRA Engineering Management also provides or performs the following: (a) provides engineering and drafting support for ATR modifications, (b) performs technical surveillance of core and fuel performance and provides nuclear engineering support (both analytical and experimental) to assist in the investigation and resolution of anomalous reactor behavior, (c) initiates and coordinates the annual review of the ATR TSR, (d) prepares Core Safety Assurance Packages (CSAPs), (e) maintains the ATR UFSAR and TSR, and (f) manages and coordinates the procurement of test reactor fuels. ATR safety performance reviews are presented in detail in Section 13.1.2.2 of this chapter. The Project Management Supervisor provides project direction for significant projects and TRA construction projects.

The Training Manager is responsible for providing training, qualification, and certification programs for personnel who operate, maintain, and support ATR. This manager performs the following functions: (a) evaluates DOE orders and directives and industry training program requirements and standards for the commercial nuclear industry reactors; (b) provides recommendations to meet these standards; (c) develops, implements, and maintains performance-based training programs for key Reactor Operations personnel that meet DOE Order 5480.20A (DOE 2001a) requirements; (d) provides assistance to other managers in RP to meet their requirements for training and orientation of personnel; (e) assists in conducting emergency action training; (f) ensures that minimum eligibility requirements for certification of personnel are met; (g) develops and conducts special training programs required because of experiment or plant modifications; (h) ensures that standards for evaluation and content of oral examinations are appropriate; (i) prepares and administers comprehensive written exams as part of the formal certification process; and (j) establishes and maintains current training and qualification records for each individual participating in formal training and qualification programs. The ATR Training Program is discussed in detail in Section 13.2 of this chapter.

The document control group is responsible for document configuration control. Configuration and documentation management are discussed in RP Standard Practices. Document review functions are also discussed in RP Standard Practices.

13.1.1.3 Organizational Interfaces. This subsection describes the interfaces that are established within and between the groups dedicated to the ATR facility. All of the support organizations interface with each other.

The Experiments organization interfaces directly with the customer who supplies the tests and test requirements. The customer is the ultimate user of data that are generated by ATR. As such, the Experiments organization supplies the necessary experiment test conditions to ATR Operations. In general, ATR Operations is responsible and accountable for ensuring (a) that the reactor is operated in accordance with DOE requirements; and (b) that experiment testing is conducted in a businesslike and professional manner, and in accordance with customer specifications. ATR support organizations provide functional support in the area of radiological control, safety and environmental compliance, quality-control engineering, construction projects management, maintenance, utility operations, electrical engineering, mechanical engineering, nuclear engineering, training, and document control. Consistent with availability of funding resources provided by DOE, the RP management team jointly develops requirements, plans, and schedules to meet DOE and customer needs.

13.1.2 Administrative Controls

This subsection discusses the administrative controls necessary for maintaining a safe work environment and assessing safety performance.

13.1.2.1 Safety Culture. The general safety policy is given in *Safety and Health*. It is the policy of the Contractor to operate its safety and health programs to the standard of a "high level of excellence." The following safety program characteristics are evident: (a) operations are conducted in compliance with DOE directives and recognized national and local standards and requirements where they are equal, exceed, and/or do not conflict with the DOE directives applicable to the Contractor; (b) the programs are conducted in a preventative mode that recognizes and controls work place hazards; (c) employee involvement in the total safety and health process is encouraged; and (d) first priority is given to the safety and health of the work force and to the protection of the environment and the public.

A work-control document is normally required before any maintenance, fabrication, installation, or intrusive inspections are performed at ATR. Certain low risk tasks do not require a work-control document. The INEEL Standard for Integrated Work Control Process details how the work control document is prepared, planned, and approved. It also details when a work-control document is not required. When the risks exceed defined criteria, a safety review is required for TRA Work Orders (WOs). A Safety Representative reviews these work-control documents and verifies the adequacy and intent of safety involvement.

The safety culture is emphasized at ATR by including Safety, when required, with Detailed Operating Procedure (DOP), Operating and Maintenance Manual (O&MM), and work-control document changes; it is further emphasized by RP policy, which encourages employees to formally identify their concerns about safety, quality, and environmental issues. However, documentation alone does not ensure safe, efficient, and professional support or reactor operation. Individual employees are encouraged to evaluate the safety of their own actions continually.

Reactor, personnel, and public safety is foremost in operating the facility. Each support activity is performed with this policy in mind. Design projects consider state-of-the-art equipment and techniques to ensure that plant systems can be safely and effectively operated. Safety analyses and documentation use standards that provide a demonstrably safe and efficient operational envelope.

13.1.2.2 Safety Performance Reviews. This subsection identifies the administrative control and procedural mechanisms that are implemented to conduct contractor independent review and appraisal of safety performance at ATR. Independent reviews and appraisals are discussed and safety enhancements are implemented into ATR safety programs.

RP has an internal, independent safety review program that meets current practices in the nuclear industry for Quality Assurance and Nuclear Safety as required in 10 CFR 830. This program, when combined with other RP and non-RP review audits and appraisal programs, constitutes full compliance with Contractor Policy, and DOE Orders for nuclear safety review.

13.1.2.2.1 Independent Review—The RP safety review program is implemented in part through the functions and responsibilities of an independent safety review committee that reports to and is approved by the RP Director. This committee is chartered with providing reviews and oversight to maintain a high degree of safety in ATR facility programs and operations. The committee is responsible for carrying out the RP independent safety review requirements of the orders referenced in Section 13.1.2.2. This committee independently reviews selected documentation and operations to ensure there are no unreviewed safety questions (USQs) or deviations from the TSR or other safety limits related to nuclear safety.

A contractor designated independent review committee shall plan and conduct assessments and audits to evaluate the performance of work processes with regard to requirements and expectations.

13.1.2.2.2 Nuclear Safety—RP Nuclear Engineering provides reactor safety analysis support for ATR operation. This unit performs the following functions: (a) prepares CSAPs for each ATR reactor operating cycle and obtains reviews for these packages; (b) evaluates experiment irradiation requests to determine their feasibility, safety, and conformance with respect to reactor capability and TSR; (c) processes proposals for changes to the ATR TSR by receiving the changes, obtaining the necessary reviews, and incorporating the changes into ATR TSR via DARs; (d) performs technical surveillance of core and fuel performance and provides nuclear engineering support, both analytical and empirical, to assist in the investigation and resolution of anomalous reactor behavior; (e) performs studies and investigations to increase reactor fuel economy and provides for routine surveillance of ATR fuel element performance on a cycle-to-cycle basis; (f) evaluates operational occurrences for safety significance; and (g) performs and evaluates the results of nuclear requalification tests after major ATR modifications that could affect core safety. Nuclear requalification tests are performed in accordance with the applicable requirements of the Contractor's *Quality and Requirements Management*.

In addition to the functions described above, Nuclear Engineering also performs the following: (a) initiates and coordinates the annual review of the ATR TSR to ensure consistency with the latest design basis; (b) develops and maintains calculational techniques current for those calculations that are routinely used in the preparation of CSAPs, and ensures that supporting documentation describing these techniques is current; (c) maintains current Safety Analysis and TSR supporting documentation; (d) maintains a record of neutron fluence (greater than 1 MeV) of the hafnium components in the ATR control and safety systems; and (e) specifies replacement of the hafnium components before the time of their specified exposure limit.

The supervisor of Nuclear Engineering has the responsibility for approving CSAPs. Once approved, the CSAPs are reviewed by the independent safety review committee. After a CSAP has been reviewed, approved, and issued, it becomes an operating document. Subsequent changes to the CSAP

require independent safety committee review, Nuclear Engineering review, and approval of the ATR Operations Manager.

13.1.2.2.3 Experiment Safety Assessment—The ATR Experiments organization prepares, coordinates, presents, and files Experiment Safety Analysis Reports (ESAs) and supporting documentation for all ATR experiments. The ESA process is discussed in detail in Chapter 10 (Experiments and Irradiation Facilities).

The ATR Experiments supervisor has the responsibility for approval of the ESA. The ESAs are reviewed and approved by Nuclear Engineering and the RP independent safety review committee. After an ESA has been reviewed, approved, and issued, it can be changed using a DAR. The DARs require review by the RP independent safety review committee, Nuclear Engineering, and the ATR Experiment Supervisor.

13.1.2.2.4 Unreviewed Safety Questions—The contractor maintains a program for evaluation and control of unreviewed safety questions based on the requirements of 10 CFR 830, Unreviewed Safety Questions. The program is developed in the contractor's *Engineering and Research* manual and implemented in RP Standard Practices (SP).

13.1.3 Plant Procedures

This subsection documents the processes by which the form and technical content of procedures are developed, verified, and validated. Mechanisms to identify and correct technical or human-factors deficiencies are discussed. DOE Order 5480.19, Attachment 1, Chapter XVI provides procedure requirements that are met by RP procedures (DOE 2001b).

13.1.3.1 Development of Procedures. ATR procedures consist of reactor and experiment operating procedures, administrative procedures, emergency preparedness procedures, and maintenance procedures. ATR Operations procedures are divided into normal procedures, off-normal procedures, and the emergency procedure network. The normal procedures are composed of DOPs and OMMs. Maintenance procedures are discussed in Chapter 14 (Initial Test Program, Inservice Surveillance and Maintenance). OMMs include plant operating procedures, experiment operating procedures, and a chemistry manual. The off-normal procedures comprise abnormal operating procedures, the reactor alarm procedures, experiment abnormal procedures, and experiment alarm procedures.

The Emergency Procedure Network is composed of symptom-based optimal recovery procedures and function oriented-function restoration modules. The optimal recovery procedures include emergency contingency action procedures, emergency operating procedures, and emergency recovery procedures. The function restoration modules are composed of critical safety function status trees and function restoration procedures to maintain subcriticality, core cooling, and confinement.

RP procedures are written to describe the format and standards to be used in developing new procedures and changing existing procedures used within the RP organization.

13.1.3.2 Verification and Validation of Emergency Procedures. The methods used to ensure appropriate verification and validation of emergency procedures are contained in RP procedures.

13.1.3.3 Verification and Validation of New or Revised Procedures. New procedures are verified and validated. Verification and validation of new or revised/changed procedures are described in a RP SP on configuration control of RP documents.

13.1.3.4 Identification and Correction of Procedure Changes. This subsection documents the mechanisms that have been established to identify and to revise and upgrade procedures.

13.1.3.4.1 Methods to Identify Procedural Changes—Several mechanisms may necessitate procedural changes, such as (a) facility modifications, (b) facility event and occurrence reporting, (c) internal or external audits and technical safety appraisals, (d) quality inspections, (e) employee-identified issues/concerns, and (f) facility self-assessment. Necessary procedural changes can also be identified through ATR operating experience, personnel queries, and lessons learned from other facilities.

13.1.3.4.2 Dissemination and Control of Changes in Procedures—Plant procedures are controlled documents and are maintained in a document-control area. Procedure changes are reviewed and approved before they can be officially made and the changed procedures transmitted. The user groups ensure that procedures being used are the most current versions by crosschecking the procedure issue dates against the latest revision of the procedure index. The RP SP on configuration control of RP documents details the methods for performing procedure revisions and changes in accordance with DOE Order 5480.19 (DOE 2001b).

13.1.4 Occurrence Reporting

This subsection discusses reporting of abnormal occurrences as described in DOE Order O 232.1A, "Occurrence Reporting and Processing of Operations Information" (DOE 1997).

13.1.4.1 Occurrence Reporting. RP occurrence reporting is accomplished in accordance with DOE Order O 232.1A (DOE 1997). RP adheres to the DOE order and has issued facility-specific criteria as required by the DOE order. Facility-specific criteria is in the Contractor's Operations manual.

The ATR facility-specific criteria identify the facility manager and facility manager designees responsible for preparing Occurrence Reports (ORs).

13.1.5 Staffing and Personnel Development

This subsection summarizes the development and use of bases for determining staffing, qualification, and personnel development requirements. DOE Order 5480.20A, "Personnel Selection, Qualification, and Training Requirements for DOE Nuclear Facilities," provides the basis for these requirements (DOE 2001a). Detailed information on staffing, personnel development, and the exceptions to DOE Order 5480.20A are contained in the TRA Training Program, which is approved by DOE (INEEL 2003b).

13.1.5.1 Bases Identification. DOE Order 5480.20A provides the basis for the requirements for staffing, qualification, and personnel development (DOE 2001a). The requirements of DOE Order 5480.20A for personnel selection, qualification, and certification are met for ATR Operations personnel.

13.1.5.2 Staffing, Qualification, and Certification

13.1.5.2.1 Position Requirements—The ATR reactor personnel requirements are listed in Table 4-1 of PDD-105 (INEEL 2003b). Table 4-1 lists the DOE Order 5480.20A requirements for each position.

13.1.5.2.2 Personnel Selection—RP managers are responsible for personnel selection in their own organizations. Personnel for the ATR operating organization are selected in accordance with DOE Order 5480.20A requirements (DOE 2001a). The minimum experience, education, and other requirements for selection and assignment of personnel for the various positions associated with the ATR operating organization are controlled by RP.

13.1.5.2.3 Personnel Qualification—The positions requiring qualification are listed in the PDD-105 (INEEL 2003b).

Essential ATR organizational personnel responsible for operating the reactor or experiments attain certification by completing classroom training, on-the-job training checklists, written examinations, operational evaluations, and Qualification Review Committee (QRC) oral examinations and/or walk-throughs as appropriate to the position in accordance with the PDD-105 (INEEL 2003b).

13.1.5.2.4 Personnel Certification—Certification of ATR operating personnel requires comprehensive written final examinations, operational evaluations, oral examination, and review by the ATR Operations Manager or designated alternate. Certification is controlled in accordance with the PDD-105 (INEEL 2003b).

The positions certified at ATR that are equivalent to positions listed in DOE Order 5480.20A are identified in the PDD-105 (INEEL 2003b).

Certification prerequisites are established and training programs exist for each level of a specific progression (e.g., Experiment Operator through Reactor Operator). The progression ensures that each individual obtains the training and experience necessary to support completing the next level or step in the progression.

Each candidate for a certification is examined by an oral examination. Before an oral examination can be convened, the following must be documented: (a) successful completion of a final written examination, (b) successful completion of the applicable operational evaluation(s), and (c) the cognizant manager has verified completion of the required training and completed an administrative review for fitness for duty.

Following an oral examination, the examination results are submitted to the cognizant manager. An overall satisfactory evaluation, concurrence of responsible management, and approval by the appropriate line manager (other than the individual's immediate supervisor) constitutes certification.

The qualification and certification processes described above meet the requirements of DOE Order 5480.20A (DOE 2001a).

13.1.5.2.5 Fitness for Duty—Managers are provided training to assess fitness for duty of operating personnel. RP personnel are required to adhere to the Contractor's Drug Free Workplace/Substance Abuse Policy. The Contractor requires a pre-employment drug screen and

implements subsequent testing of all employees based on random selection, reasonable suspicion, or involvement in accidents or incidents.

The Medical Examination Program is administered by the Contractor's Occupational Medical Program in accordance with the Contractor's *Safety and Health* Manual. A medical examination for ATR Operations personnel is conducted before assignment to the ATR to evaluate the physical condition and ability of an individual to operate or supervise the operation of a reactor and associated systems. Subsequent medical examinations are conducted periodically for the length of the employee's tenure at TRA. Employees certified as Experiment Operator, Senior Reactor Operator, Shift Supervisor, or fissile-material handler complete the medical examination at 2-year intervals in accordance with PDD-105 (INEEL 2003b). Whenever there is doubt of the medical ability of an employee to perform assigned work, the employee is referred to the Occupational Medical Program for evaluation. The Contractor conforms to medical policies for all employees in accordance with the Contractor's *Safety and Health* Manual.

Changes in the physical or mental health or known medical or substance-abuse related disability of employees must be reported to RP managers and treated as Contractor confidential. Employees are required to immediately report the awareness of any change in physical or mental health or known medical or substance-abuse related disability that might adversely affect their continued operational ability. Managers must be alert to symptoms of mental or physical impairment that indicate a health problem or change in medical condition of the employee. The managers are required to remove him or her from the work-assignment area if the employee's physical or mental health, or change in medical condition, could affect his or her operational ability or job performance.

13.1.5.3 Personnel Development. The Contractor encourages, supports, and organizes programs related to employees' professional development. The supported activities include application-oriented development and general educational development.

13.2 Training Program

This section identifies aspects of ATR Operations that are covered by training programs. The ATR Operations training is described in detail in PDD-105, TRA Training Program," (INEEL 2003b). The PDD-105 was written to meet the requirements of DOE Order 5480.20A (DOE 2001a). This section discusses the development, verification, and validation of the training programs, the processes of training development, the methods to identify training deficiencies, compliance with DOE training program requirements, and the evaluation of the ATR training program.

13.2.1 Development and Evaluation of Training Program

PDD-105 provides training requirements for essential ATR Operations and support-organization positions. Essential support-organization personnel include ATR technicians, technical staff, maintenance staff, and their supervisors and managers.

13.2.1.1 Development of Training Programs. A five-phase model was used for the systematic development, implementation, and evaluation of job-performance-based training programs for the reactor operator and supervisory personnel. This approach consists of the following major elements: training analysis, design, development, implementation, and evaluation.

The results of the ATR task and training requirements analysis (as well as job and task analysis results available from the Institute of Nuclear Power Operations (INPO), and the guidance provided by the *Guidelines for Job and Task Analysis for DOE Nuclear Facilities* were used to develop the training programs for ATR Operations personnel (DOE 1983).

The training programs were developed based on the training analysis. After the training analysis was completed, the sequencing of learning objectives was completed; instructional aids were developed; lesson plans, laboratory guides, simulator exercise guides, and on-the-job training qualification cards and standards were prepared; and test questions were developed.

13.2.1.2 Training Program Evaluations. Methods used to ensure that training programs are appropriate include (1) reviews performed by a group independent of the Training Program Development to ensure both technical adequacy and the ability of the training programs to support and guide human interaction with the facility systems, (2) internal appraisal, and (3) program evaluations.

13.2.2 Processes of Training Development

As described in 13.2.1.1 training is developed using a five-phase model. The five phases are analysis, design, development, implementation, and evaluation. These five phases meet the requirements of DOE Order 5480.20A (DOE 2001a). These phases are implemented using training procedures designed to ensure consistent training to all ATR personnel.

13.2.3 Identification and Correction of Training Program Deficiencies

This subsection documents the mechanisms that have been established to identify and correct technical or human-factor deficiencies in training programs.

13.2.3.1 Methods to Identify Training Deficiencies. The following methods can identify training deficiencies: (a) facility event and occurrence reporting, (b) internal technical safety appraisal and self assessment, (c) external audits, (d) cause determination, (e) employee-identified issues/concerns, and (f) training-programs evaluation and improvements.

13.2.3.2 Dissemination and Control of Changes in Training Programs. Revisions and modifications to instructional materials are routinely performed by the RP organization responsible for training.

13.2.4 Compliance with DOE Training Program Requirements

This subsection documents the Contractor's commitment to training programs that comply with the requirements of DOE Order 5480.20A (DOE 2001a). It also documents the methods used to derive the program content and to accomplish training.

13.2.4.1 Training Program Descriptions. The RP training organization has the responsibility for the conduct of ATR training for RP personnel and the maintenance of training records. This responsibility includes training for Reactor Operations as well as for radiological control technicians, maintenance, and technical support personnel.

The major goals of the training programs are to (a) ensure that ATR Operations and support personnel are properly trained to perform their assignments in a safe and efficient manner, (b) maintain and improve operational and maintenance proficiency through structured retraining, (c) conduct ATR training programs that meet or exceed DOE requirements, and (d) implement and maintain performance-based training programs for ATR Operations and support personnel.

Training programs have been developed for ATR Operations positions that require formal certification in accordance with DOE Order 5480.20A (DOE 2001a) and ATR Operations, maintenance, and technical staff positions that require formal training and qualification. Job-performance-based training programs are developed, implemented, and evaluated for reactor operator and supervisory personnel. Training programs are developed based on training job analysis.

13.2.4.2 Derivation of Training Program Content. The first step in deriving training-program content is completing the training job analysis and task analysis. The next step is design of the training program, followed by development.

13.2.4.3 Training Techniques. Detailed training information is contained in PDD-105. Training schools are conducted within RP to assist ATR Operations personnel in completing training programs, accomplishing job progression within a career path, and achieving training goals. The first step in the training program is classroom training. The second step is through on-the-job training. The third step usually consists of written examinations, which are used primarily to test the knowledge level of individuals participating in training and qualification or certification programs. The fourth step usually consists of operational evaluations, which are used to assess the proficiency of individuals participating in training and qualification or certification programs. Operational evaluations are performed in the workplace or plant, or on the simulator as applicable.

Oral examinations and walk-throughs are used as the final assessment mechanism in determining an individual's suitability for qualification or certification. QRCs are responsible for reviewing training records and conducting oral examinations of candidates requiring certification and some candidates requiring qualification. QRCs conduct these reviews in accordance with the PDD-105 (INEEL 2003b). Oral examinations and walk-throughs are conducted for candidates requiring qualification in accordance with PDD-105.

13.2.4.4 Training Instructor Qualifications. The selection and qualification of ATR training instructors, described in PDD-105 (INEEL 2003b), are in accordance with DOE Order 5480.20A.

13.2.4.5 Operator, Maintenance and Technical Support Personnel Qualifications. Qualification of operators, maintenance personnel, and technical staff described in PDD-105 (INEEL 2003b), is in accordance with DOE Order 5480.20A.

13.2.4.6 Certification Requirements for Positions. Essential positions must be filled by certified personnel and the certification requirements for these positions are described in Section 13.1.5.2.4 of this chapter.

13.2.4.7 Analysis and Inclusion of Operating Experience into Training Programs. Safety-significant factors derived from analysis of operating experience are included in training programs through revisions and modifications to instructional materials. Revisions and modifications to instructional materials are briefly described in Section 13.2.3.2 of this chapter.

Lessons learned, which are derived from ATR ORs, ORs from other DOE facilities, safety bulletins from the Office of Nuclear Safety, etc., are included in training programs if they are pertinent to the operation of the ATR.

13.2.5 Evaluation of Training Programs

RP personnel assess the training program's content and/or quality, and are requested to provide input to the facility training organization. This input is used to improve the content and quality of training programs.

Evaluation of training is requested of participants as well as from internal assessments conducted by training instructors, management, and other reviewers, who are chartered to evaluate the quality of RP training.

13.3 Emergency Preparedness Program

13.3.1 Purpose

The Company Emergency Management (EM) (Emergency Preparedness) Program and RP implementation of the Program ensure the safety and health of workers and the public, and protect property and the environment in the event of an operational emergency. The INEEL EM program is a function of the contractor. This EM program incorporates comprehensive emergency and RCRA contingency planning into the *INEEL Emergency Plan/RCRA Contingency Plan*. EM planning includes (a) determining hazards and credible events that could result in emergency situations; (b) preparing for those situations through the development of a trained emergency response organization (ERO); (c) procuring and maintaining emergency equipment and facilities; (d) determining protective actions; (e) developing standards and techniques for notifications, classification, consequences assessment, reentry, medical support, and program administration; (f) proving timely and accurate public information, and (g) identifying the diverse elements involved in recovery and reentry. By incorporating these emergency planning elements, the INEEL Emergency Plan/RCRA Contingency Plan implements DOE policy and requirements for the DOE emergency management system prescribed in the contractor program requirements document and DOE Order 151.1A (DOE 2000).

The extent of emergency planning and preparedness required is based on and commensurate with the major hazards and consequences associated with the TRA facility.

Hazards assessments provide the technical basis for the Emergency Management Program. The extent of emergency planning and preparedness required for TRA directly corresponds to accidents or events and evaluation of potential accident or event consequences.

A hazards assessment that evaluated radiological and nonradiological hazards and the consequences of those hazards has been conducted for TRA. Available and applicable information from safety analysis reports, toxicological data bases, hazardous materials data bases, weather information, material safety data sheets, and other documents were used in developing these assessments. The specific documents used in determining the extent of the hazards identified in this information are referenced in the *TRA Hazards Assessment* (HAD-3) (INEEL 2003a). The hazards assessment includes a determination of the size of the emergency planning zone (EPZ). The EPZ is the area surrounding the facility for which special planning and preparedness efforts are required to ensure that prompt and effective protective actions can be taken to minimize the risk to workers, the public, and the environment. Evacuation and sheltering requirements for co-located workers are discussed in the *INEEL Emergency Plan/RCRA Contingency Plan and the TRA Facility Specific Addendum*.

The basis for modeling emergency response is developed from the ATR PRA (Atkinson, Eide, and Thatcher 1992). Source terms from various accident sequences have been modeled into plume projections. The consequence assessment of the plume defines the geographical scope of the required Emergency Preparedness Program at TRA. Analysis and model development associated with ATR accidents takes into consideration the capabilities of the INEEL ERO, evacuation and sheltering procedures, accident guidelines, and the potential consequences.

13.3.2 Philosophy, Objectives, and Organization

The EM Department is charged with developing a comprehensive consolidated Company EM program and with administering it. The EM Manager is responsible for hazards assessments, onsite planning (ERO training, drills and exercises, and emergency plans and procedures), operating and maintaining the INEEL EOC and the CFA ECC and for managing the offsite emergency planning program. The EM Manager is the EM Program Administrator.

This consolidated approach to emergency planning and response provides for consistency in the planning, preparedness, and response concepts for TRA as well as other company facilities.

In conjunction with the normal day-to-day operations, facility management has the responsibility for the safety of personnel and the public, and for the protection of property and the environment during an emergency. Facility managers meet EM obligations through the EP Program, which is developed and maintained for them by the EM Department.

Landlords and functional managers have the responsibility of informing EM Department personnel of any operation or configuration changes that may affect hazards or consequence assessments.

At TRA, an EP oversight steering committee, the Emergency Management Implementation Team, consisting of key managerial personnel, meets periodically to discuss current EM topics, policies, and procedures and makes recommendations to the EM Department on improvements in these areas.

13.3.3 Emergency Plan Description

The INEEL Emergency Plan/RCRA Contingency Plan, contains information that is general to all contractor facilities. Information in the TRA addendum is facility specific and denotes any deviations or additions to the base plan. The Plan provides the overall process developed to respond to and mitigate any consequences of emergencies that might arise at the INEEL. The contractor intends this plan to be a consolidated document that complies with all applicable DOE, federal, state, and local requirements for plans that are variously called emergency plans, emergency response plans, emergency action plans, emergency manuals, contingency plans, etc. This plan is the primary component in defining and directing the INEEL EM Program. The plan and program are implemented by detailed procedures addressing specific tasks (examples: programmatic tasks, response tasks, recovery tasks, and prior to recovery tasks). Where appropriate and necessary, detailed emergency preparedness implementing procedures Emergency Plan Implementing Procedures (EPIs) are summarized in this plan.

The plan contains EM Program administrative information. It defines the authorities and responsibilities of INEEL emergency managers, i.e., Emergency Director (ED), Emergency Action Manager (EAM), IRTs, EROs, and their interfaces with the contractor support organizations and other emergency officials. The plan lists emergency response facilities and equipment, defines both on-site and off-site relationships, outlines processes used to assess consequences and develop protective actions, and describes program administration. It also describes the responsibilities of general employees in regard to event initial response and notification requirements. The plan is a descriptive document and is not intended for operations use; the plan is implemented through EPIs.

13.3.4 Emergency Organization

The INEEL ERO is structured to fit the diversity of the INEEL and to optimize its resources. It is an umbrella structure, which consists of three levels (a) on-scene, based at the On-Scene Command Post; (b) facility, based at the ECC; and (c) contractor/DOE-ID management, based at the Emergency Operations Center (EOC).

Senior managers and technical specialists form the consequence assessment/strategic arm of the INEEL ERO, operating out of the EOC. The EDs are trained and qualified by the EM Department. The ED has the overall responsibility for managing emergencies at the INEEL.

All INEEL ERO personnel are trained for their emergency response positions; however, the skills they use in their normal work and the associated required training for that work are normally the basis for their assignment. Other technical and operations personnel, normally assigned to the facility or from other areas, may be used for technical support during an emergency.

Mitigation of the emergency (tactical response) is conducted (in most cases) at the scene of the incident by the On-Scene Commander. For most events (fire, hazardous material, and special rescue) the On-scene Commander will be the senior fire department officer at the scene and the primary responders will be firefighters. Support may be provided by the facility Incident Response Team (IRT), coordinated by an IRT Leader (IRTL). In security-related incidents, the INEEL protective force would become the primary responders, with the senior protective force officer at the scene acting as the On-Scene Commander. Mitigation and the on-scene protective action are the primary focus of these responders.

The size, management, and composition of the TRA ERO were determined on the basis of the facility complexity and type of emergency response anticipated. The TRA ERO is comprised of managers, operations, maintenance, administrative, and environment, safety and health personnel, who are familiar with the facility and its hazards and are trained to function in that environment.

The TRA ERO is further described in the TRA Addendum. The ERO is divided into four primary functions: command, operations, planning, and logistics. The four functions are briefly described below:

- The command function is made up of the decision makers whose responsibilities are to make appropriate notifications, to make protective action decisions onsite, to recommend protective actions for offsite populations, and to mitigate the emergency.

- The operations function includes elements involved in the response (i.e., TRA Incident Response Team) whose responsibilities include taking readings and measurements, and/or physical mitigation of the emergency.

- The planning function is made up of personnel who collect and analyze data, determine the possibilities/probabilities of the situation, and make recommendations to the command element.

- The logistics function is made up of personnel who provide the resources (i.e., equipment, supplies, services, and personnel) necessary to accomplish all assigned or anticipated tasks delegated in support of mitigation.

For events originating at TRA, the CFA ERO provides support to the logistics function.

13.3.4.1 Participation Units and Commitment. The INEEL Warning Communications Center (WCC) facilitates notification and activation of off-facility participating emergency units. Units may include INEEL Medical, Fire, Facility Emergency Control Centers, INEEL EOC, and county and State emergency control centers.

The INEEL EOC supports the facility and coordinates with the facility in providing protective action recommendations to appropriate off-site agencies, and coordinates response activities with local, State, and Federal outside agencies. Implementation of Memoranda of Agreements, Memoranda of Understanding, etc., are coordinated through the INEEL EOC as defined in the *INEEL Emergency Plan/RCRA Contingency Plan*.

Management authority for commitment and coordination of support to outside agencies is delegated to the INEEL EOC Emergency Director. The Emergency Director is a senior contractor official.

13.3.4.2 Communication. The WCC is a facilitator for the TRA and relays emergency communications to both onsite and offsite emergency entities.

13.3.4.3 Equipment. Special equipment is maintained to handle emergencies within the TRA. This equipment includes provisions necessary to mitigate possible emergencies that could occur in the jurisdiction of the TRA. The following categories detail the types of equipment available for emergency use at TRA.

13.3.4.3.1 Communications Equipment—Radios are strategically placed throughout the INEEL to serve as the warning system to ensure the transmittal of emergency communication to INEEL facilities. Transmissions on the emergency warning radio channel are limited to actual emergencies, equipment tests, and emergency drills/exercises. The WCC is responsible for monitoring, testing, and coordinating this system.

TRA management maintains dedicated emergency radios for communications with the INEEL Fire Department, TRA Maintenance, TRA Incident Response Team, Facility Monitoring teams, and all other associated TRA and INEEL emergency response personnel.

Dedicated emergency telephone and facsimile communications are maintained by the facility.

13.3.4.3.2 Equipment Maintenance—Equipment maintenance and inventory is tracked as explained in the TRA Addendum. (The addendum is part of the companywide emergency preparedness plan.)

Other emergency gear, such as heavy equipment and evacuation buses, are tested and maintained by the appropriate Contractor organizations. Additional resources and equipment can be requested through the CFA ECC during a TRA emergency.

13.3.4.3.3 Facilities—The majority of TRA-680 is maintained as a dedicated facility which serves as the primary TRA ECC.

13.3.4.3.4 TRA Alarm and Wind Direction Requirements—The *INEEL Emergency Plan/RCRA Contingency Plan* and the TRA Facility Specific Addendum details the evacuation process, where it is activated, how the activation takes place, where the various activation centers are located, who is responsible for activation, the various alarm sounds or noises, and the appropriate personnel responses to the varied alarms.

The EALs contain predetermined protective actions for incidents that require evacuation or movement to a safer area. Employee actions are described in the ES&H and site access training. Voice paging can be utilized to provide specific direction to employees. If the incident is localized, verbal communication or manual activation of a local area alarm may be used.

In the event that a TRA-wide evacuation is required (all personnel relocate to a relocation area), and the conditions have become severe or are imminent as to require prompt evacuation of TRA personnel, it can be indicated in one of the following ways:

- An announcement over the voice paging system, followed by an alternating siren, and evacuation area designated lights on the top of Material Test Reactor (MTR) and Engineering Test Reactor (ETR)
- An alternating siren and evacuation area designation lights on the top of the MTR and ETR
- Vehicle (either security or Incident Response Team) public address system and/or alternating siren.

A take cover action is activated when conditions have become severe or are imminent as to require prompt sheltering of all TRA personnel. This type of incident is indicated by one of the following methods:

- An announcement over the voice paging system followed by a steady siren
- A steady siren
- Vehicle (either security or Incident Response Team), public address system, and/or steady siren.

The U.S. Department of Commerce, National Oceanic and Atmospheric Administration (NOAA) Air Resource Laboratory Field Research Division (ARLFRD)is responsible for the measurement, collection, quality assurance, archiving, and dissemination of high-quality meteorological data from locations in and around the INEEL.

Meteorological measurements collected by the ARLFRD for INEEL support are used to provide climatological and operational information to DOE and its contractors to facilitate emergency response by DOE and its contractors.

Operational and emergency assistance includes the provision for continuous online meteorological data in the INEEL WCC as well as contractor facilities.

The overall Meteorological Monitoring Program design is dictated by the need to produce representative data for the INEEL area to meet specific operational and potential emergency situations. Guidance is provided by the *Idaho National Engineering Laboratory Environmental Monitoring Plan: Baseline Document* (DOE Idaho Operations Office (DOE-ID 1992)), and is applied on the basis of professional meteorological judgment. Meteorological measurement network stations are arrayed to represent local scale meteorological conditions. Measurement equipment is selected with guidance from ANSI/ANS-2.5-1984 (ANSI 1984). The meteorological data is accessible through a near real time computer display system called INEEL VIZ.

During ATR operation, wind-velocity and -direction instrumentation provides the information for choosing an evacuation direction and for estimating offsite doses. The primary instrumentation receives its signal from the TRA NOAA tower, and the secondary instrumentation is the INEEL VIZ. Both of these systems provide data readout in the control room. The MTR wind sock or information from NOAA through the WCC can be used as a backup in the event both the primary and secondary systems are not operable.

13.3.5 Independent Audit

Periodically, an independent assessment of the Emergency Management Program implemented at TRA is conducted. Any deficiencies and items needing improvement are formally tracked by the facility or Emergency Management Department through to completion.

13.4 Physical Security

Physical security of the ATR is ensured through implementation of the INEEL Site Safeguard and Security Plan which includes TRA and ATR, and through ATR's own security plan. Both of these documents are limited-access documents.

13.4.1 TRA and ATR

TRA is located in the southwest quadrant of the INEEL; the nearest INEEL boundary and access to public domain is approximately 7 mi from TRA. TRA is a multiple-use facility consisting of approximately 71 buildings and 55 structures located on 102 acres. Buildings and structures are erected and removed to meet mission requirements. These facilities have been modified to fit the changing needs of the INEEL and now provide five major types of functional space: reactor, laboratory, office, storage, and test areas.

The ATR section of TRA is located in the northwest quadrant of TRA and contains the ATR Reactor Building/Advanced Test Reactor Critical Facility (inside the ATR building), the reactor cooling tower, ATR maintenance support, and several other smaller buildings that are nonessential to the ATR mission. See Chapter 1 (Introduction) for a complete description of the ATR facilities.

13.4.2 Physical Security

TRA is a property protection area enclosed by double perimeter fences, except for the Access Control Facility (ACF), which is in the south fence. Perimeter personnel and vehicle access points are provided for normal and emergency access. Figure 13.4-1 illustrates the position of the ATR building (TRA-670) within TRA.

13.4.3 Personnel Security

Access to the ATR requires that all personnel be authorized entry by ATR management. All personnel not holding DOE "L" or "Q" clearances must be escorted while in the ATR except during extended outages, personnel having building-access-only (BAO) clearances may be allowed unescorted access to ATR with approval from DOE-ID.

13.4.4 Routine Access

TRA access controls limit routine access into TRA to approved individuals who require admittance to perform their official duties.

Random TRA entrance/exit inspections and searches of personnel include the protective force personnel. Random searches of vehicles, and hand-carried item are conducted to provide assurance that prohibited articles are not introduced into the area without authorization and that Contractor property, classified information, and/or special nuclear material (SNM) do not exit the areas without authorization.

13.4.5 Security Education

All ATR personnel are involved in the Contractor's Security Education and Awareness Training Program as specified in the Contractor's *Safeguards and Security* manual. RP and TRA tenant

organizational managers who enter ATR ensure that their subordinates receive the following security education training: initial security briefing, comprehensive security briefing, when required, annual security refresher briefing, on-the-job security briefing, and ongoing RP security awareness.

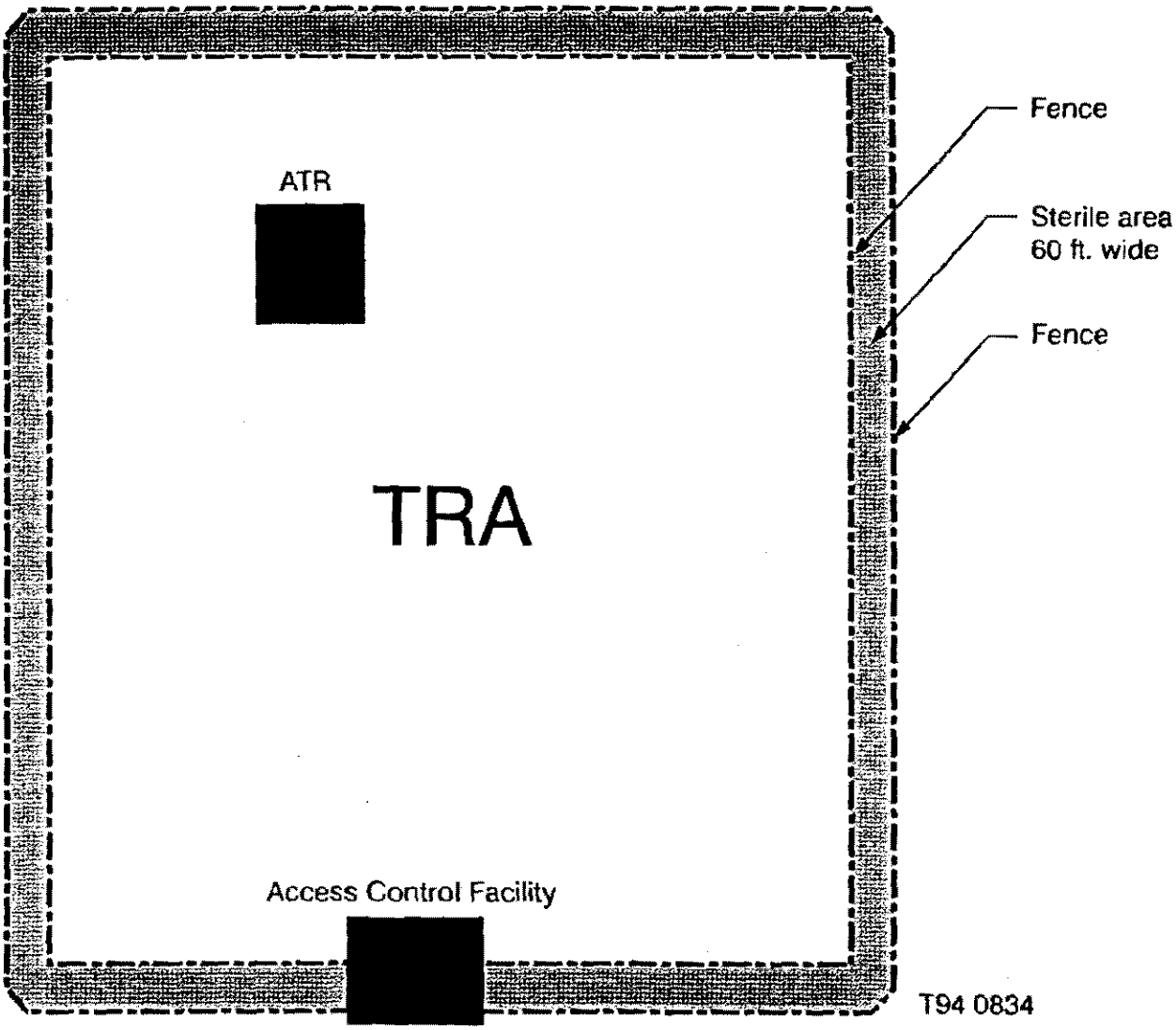

Figure 13.4-1. ATR location inside the TRA. **(For Information Only)**

13.5 Conduct of Operations

This section describes the Conduct of Operations Program required by DOE Order 5480.19, "Conduct of Operations Requirements for DOE Facilities" (DOE 2001b) as implemented at the ATR with the Contractor's *Operations* manual. Additionally, the following subjects are addressed in this section:

- Fire protection
- Handling of SNM
- Security
- Review and audit.

13.5.1 Topics Covered By Operations Manual

The following subsections, summarized from the Contractor's *Operations* manual, describe the scope and purpose of operations conducted at ATR.

13.5.1.1 Operations Organization and Administration. A high level of performance at the ATR is accomplished by establishing high standards, which are endorsed by management and communicated to the staff. Chapter I of the Contractor's *Operations* manual includes guidance to all employees. Major provisions of the *Operations* manual are as follows:

- Provides a list of principles of operation (good practices) to apply, which promote cost-effective and safe operation, and minimize error and rework.
- Provides the procedures for professional conduct of operations so that operator performance meets the expectations of the Contractor and DOE. Includes professional conduct and good watch-standing practices that result in appropriate attention to facility conditions. It also emphasizes effective equipment monitoring that is necessary to detect abnormal conditions or adverse trends so that appropriate action can be taken before equipment malfunction occurs.
- Presents provisions for permitting and limiting occupancy of controlled areas.
- Presents the requirements for accuracy and reliability of the communications that are essential for the safe and efficient operation of a facility.
- Provides instruction for the control of training in situations where a trainee must perform under an instructor's supervision to avoid errors by the trainee that might affect safety.
- Describes the established review process to investigate and resolve abnormal events. Abnormal events are all off-normal, unusual, and emergency occurrences as defined by DOE Order O 232.1A (DOE 1997).
- Provides direction for notifying the DOE and other appropriate agencies of events or conditions that have or may have safety, health, quality-assurance, security, public, or environmental concerns.
- Controls equipment and system status to ensure the facility operates within its safety and operating limits for the safety and welfare of employees, the public, and the environment.

- Provides a consistent method for equipment status control through component tagging or locking that protects personnel from injury, protects equipment from damage, maintains operability of facility systems, and maintains the integrity of the systems' physical boundaries. This procedure is based on 29 CFR 1910, "Occupational Safety and Health Standards (OSHA)," and DOE Order 5480.19, "Conduct of Operations Requirements for DOE Facilities," (DOE 2001b), which require the use of danger tags, caution tags, and locking devices. The tags and devices ensure that before an employee performs any servicing or maintenance on a machine or equipment where unexpected energizing, startup, or release of stored energy could occur and cause injury or equipment damage, the machine or equipment shall be isolated from the energy source and rendered inoperative.
- Establishes a system for independent verification of the correct positioning of components that are critical to the safe operation of a process, system, or facility. Independent verification provides a high degree of reliability in ensuring correct facility operation and correct positioning of components such as valves, switches, and circuit breakers.
- Provides direction for establishing and maintaining operating logs to record the data necessary to provide an accurate history of facility operations.
- Provides instructions to be followed during operations turnover to ensure that incoming personnel are provided pertinent information about the overall status of the operation.
- Establishes the actions necessary to ensure that the parameters for facility/operations chemistry or unique processes are properly maintained.
- Provides instructions for establishing a uniform, formally required reading program for operations.
- Provides instructions for the dissemination of essential short-term information and administrative instructions to affected individuals.
- Provides minimum standards for the preparation, approval, and control of operations procedures.
- Establishes the method for controlling and auditing operator aids.
- Establishes an equipment- and piping-labeling program to ensure personnel are able to positively identify systems and equipment.

13.5.2 Fire Protection

This subsection identifies the fire protection program for ATR and discusses the safety sufficiency of provisions for the control of chemical and radioactive hazards identified in DOE Order 420.1A, Facility Safety (DOE 2002).

13.5.2.1 Programmatic Elements

13.5.2.1.1 Fire Protection Program—The ATR Fire Protection Program is consistent with the requirements of the DOE Fire Protection Program outlined in DOE Order 420.1A, Facility Safety (DOE 2002).

13.5.2.1.2 Assessments—Provisions for fire-protection assessments are included in RP administrative procedures.

13.5.2.1.3 Fire Hazards Analyses—The Combination Fire Hazard Analysis and Fire Safety Assessment ATR Building TRA-670 (HAD-116) (INEEL 2001a) provides an analysis of the fire-protection features of the ATR. The combination Fire Hazard Analysis and Fire Safety Assessment ATR Support Buildings (HAD-114) (INEEL 2001b) provides an analysis of the fire-protection features of the ATR support buildings.

13.5.2.2 Physical Features of the Program. The physical features and hardware of the ATR Fire Protection Program are described in Chapter 9 (Auxiliary Systems) of this UFSAR. Additionally, a fire department, located at CFA, provides engines, additional equipment, and a professional fire-fighting force trained to respond to fires in nuclear and reactor facilities.

13.5.2.3 Administrative Features of the Program. The Fire Protection Program for ATR and supporting facilities is governed by requirements in the following documents:

- The Contractor's Safety and Health
- RP's SPs and MCPs that provide specific procedures for use at TRA.

13.5.2.3.1 Contractor Safety and Health—Fire protection for the Contractor's facilities is currently designed to meet the requirements of DOE Order 420.1A. The objectives of section 4.2 are to establish requirements for a comprehensive fire and related hazards protection program for facilities sufficient to minimize the potential for:

- occurrence of a fire or related event
- a fire that causes an unacceptable on-site or off-site release of hazardous or radiological material that will threaten the health and safety of employees, the public or the environment
- vital DOE programs suffering unacceptable interruptions as a result of fire and related hazards
- property losses from a fire and related events exceeding defined limits established by DOE
- critical process controls and safety class systems being damaged as a result of a fire and related events.

The Contractor's ES&H organization develops and implements Contractor-wide requirements and standards, directs Contractor fire protection initiatives, gathers Contractor fire data, and conducts independent fire-protection audits, and identifies and implements Contractor fire protection requirements. A Fire Marshal is established within ES&H to be responsible for formulating and maintaining a Contractor fire-protection plan and maintaining the fire-protection section of the Contractor fire-protection procedures.

The TRA fire-protection engineer reports to line management and the Fire Marshal and provides support on applicable appraisals and audits, conducts fire-protection evaluations of facilities, and performs fire- protection reviews of applicable design projects, Work Orders, and facility changes. The fire- protection engineer also provides (a) assist the training department regarding such topics as fire prevention, fire-detection and -suppression systems, and fire-hazard analysis; (b) review, follow-up, and acceptance testing for fire-protection-related construction projects; (c) support for loss investigations, fire-protection impairments; and (d) guidance and direction on the inspection and testing of fire-protection equipment performed by the Contractor's fire-protection technicians.

TRA/ATR facilities and activities (including design and construction) shall be characterized by a level of fire protection that is sufficient to fulfill the requirements of the best protected class of industrial risks ("Highly Protected Risk" or "Improved Risk") and shall be provided protection to achieve "defense-in-depth." This includes meeting the applicable building code and National Fire Protection Association Codes and Standards, or exceeding them (when necessary to meet safety objectives), unless an exemption has been granted. The applicable codes and standards are those in effect when facility design commences ("code of record"). When significant modifications to a facility occur, the current edition of the code or standard shall apply to the modification.

Fire hazards analyses (FHA) are developed for all TRA/ATR nuclear facilities, significant new facilities and facilities that represent unique or significant fire safety risks as required by DOE O 420.1A. The conclusions of a FHA shall be incorporated in the Safety Analysis Report (SAR) Accident Analysis and are integrated into design basis and beyond design basis accident conditions.

The Contractor's *Safety and Health* provides procedures that dictate fire protection throughout the Contractor and at ATR; typically these include the following:

- The procedure for managing fire-protection impairments describes responsibilities and processes to minimize the duration and impact of impairments to fire-protection systems.
- The procedure for cutting and welding fire safety implements DOE order requirements and identifies responsibilities to minimize risks to employees, property, and the environment from fire hazards associated with cutting, welding, brazing soldering, and other hot work.
- The procedure for inspection, testing, and maintenance of fire-protection systems and equipment implements DOE order requirements and national fire code standards and identifies responsibilities for the inspection, testing, and maintenance of the Contractor's fire-protection systems and equipment to ensure their proper operation in emergency situations. This procedure gives guidance on what needs to be tested, the frequency of testing, and by whom it should be tested.
- The procedure for the storage and use of flammable and combustible liquids implements DOE Order 420.1A requirements and identifies responsibilities to minimize risk and vulnerabilities to employees, property, and the environment from the fire hazards associated with the storage and use of flammable and combustible liquids appropriate for the occupancy or operation involved. This procedure applies to all such storage and use of flammable and combustible liquids at the Contractor's facilities including work performed by outside contractors.
- The fire-protection design-review procedure provides instructions for Fire Protection Engineering Design Review.

Fire Protection Program elements as listed in the Site-Wide Fire Protection Program are implemented through the oversight and support of the TRA/ATR Fire Protection Engineer, those elements include:

- Fire Protection Design and Installation
- Inspection, Testing, and Maintenance of Fire Protection Systems and Equipment
- Fire Protection System Impairments
- Storage and Handling of Radioactive and Hazardous Materials

- Control of Hot Work Activities
- Tracking of Fire Protection Deficiencies
- Fire Hazard Analysis
- Quality Assurance and Configuration Control
- Fire Protection Assessments
- Fire Protection performance Indicators
- Fire Protection Exemptions and Equivalencies
- Emergency Services
- Fire Reporting and Investigation
- Fire Prevention
- Training Requirements.

13.5.2.3.2 TRA Specific Fire Protection Procedures—Specific fire protection procedures for use at TRA are implemented in such documents as RPs, SPs, SDs, and DOPs.

13.5.3 Handling of Special Nuclear Materials

This subsection describes the safe storage and criticality safety criteria for any SNM to be stored within the responsibility of ATR management under the terms of ATR's authorization to operate. The administrative requirements outlined below are based on DOE and DOE-ID orders covering the protection, accountability, control, transport, handling, and storage of SNM and fuel.

13.5.3.1 Storage. A description of the facilities for fuel storage and handling of new and irradiated fuel is provided in Chapter 9 (Auxiliary Systems) of this UFSAR. Relatively small amounts of fuel and SNM may also be present in experiments. Storage and handling of experiments containing fuel and SNM is also covered in Chapters 9 (Auxiliary Systems) and 10 (Experiment and Irradiation Facilities). The storage and handling of SNM, including fuel, is governed by the following Contractor and RP administrative procedures:

- The Contractor's Engineering and Research provides requirements for criticality safety and criticality control areas.
- The Contractor's Radiation Protection cover radioactive material identification, storage, and control; on-site and offsite release and transport of radioactive material; and radioactive-source controls.
- The RP SPs provide specific requirements that govern TRA security-area access control, the nuclear criticality safety program, and TRA unirradiated fissile material control.
- The ATR Operations SDs also provide specific requirements that govern new fuel handling, reactor canal operations, and reactor shutdown operations.

13.5.3.2 Criticality Safety. A discussion of the hardware, facilities, and analyses that provide protection against inadvertent criticality is given in Chapter 9 (Auxiliary Systems) of this UFSAR. The control of criticality of fuel and SNM is governed by the Contractor and RP administrative procedures outlined below, which implement DOE orders and DOE-ID supplemental directives covering criticality protection:

- The Contractor's Engineering and Research provides requirements for criticality safety and criticality control areas.
- The Contractor's Radiation Protection furnish requirements governing radioactive-material identification, storage and control, release, and onsite and offsite transport of radioactive material.
- The RP SPs provide specific requirements that govern TRA security-area access control, the nuclear criticality safety program, and TRA unirradiated fissile material control.
- The ATR Operations Standing Directives (SD) also provide specific requirements that govern new fuel handling, reactor canal operations, and reactor shutdown operations.

13.5.4 Security

This subsection describes the measures established to protect against unauthorized removal of fissile and radioactive materials, including access regulations and security systems. The following administrative procedures are the governing documents that provide the security measures to protect against unauthorized removal of fissile and radioactive materials.

- The Contractor's Safeguards and Security delineates the responsibilities of the safeguards and security organization, line management, and employees.
- The Contractor's Safeguards and Security provides requirements covering protection of SNM, physical protection of unclassified irradiated fuel in transit, nuclear-materials accountability and control, and nuclear-materials management.
- The Contractor's Radiation Protection provide requirements covering radioactive-material identification, storage and control; release and onsite and offsite transport of radioactive material; and radioactive-source controls.
- The RP SPs provide specific requirements that govern TRA security-area access control, the nuclear criticality safety program, and TRA unirradiated fissile material control.
- The Site Safeguards and Security Plan provides the plan for the Contractor to perform safeguards and security functions.
- Protective Force Special Orders provide a procedure for detecting and responding to unauthorized removal of SNM from TRA security areas.

13.5.5 Review and Audit

RP has an internal, independent safety review program. This program, when combined with other RP and non-RP review, audit/assessments, and appraisal programs, constitutes compliance with Corporate Policy.

The RP safety review program is implemented in part through the functions and responsibilities of a RP independent safety review committee described in RP SPs. This committee reporting to and approved by the RP Director provides a high degree of safety in RP facility programs and operations. Other aspects of the review and audit process are described in the Contractor's procedures and in Chapter 17 (Quality Assurance) of this UFSAR. The review and audit processes are governed by the following administrative procedures:

- RP Procedures address self-assessment surveillances, internal independent appraisals and audits, the accountability program, the commitment tracking system, restart of reactor and nonreactor nuclear facilities, the independent safety review committee, the line management independent review system, and readiness reviews. Procedures are also provided that cover work-control procedures, engineering design verification, engineering analysis, unreviewed safety questions (USQs), line/field safety review, quality engineering reviews, tracking radiation exposure with dose cards, and cross-connection control inspections and testing.

- The RP procedures provide instructions that govern a variety of review, audit/assessments, and tracking activities for hardware, personnel, management, documentation, and software systems. Procedures are also provided for identifying and resolving concerns and issues.

13.6 References

ANSI, 1984, *Determining Meteorological Information at Nuclear Power Sites (R 1990)*, ANSI/ANS-2.5-1984, American National Standards Institute, New York, NY, 1984.

ASME, 1997, *Quality Assurance Program Requirements for Nuclear Facilities*, NQA-1, American Society of Mechanical Engineers, New York, NY, December 31, 1997.

Atkinson, S. A., S. A. Eide, and T. A. Thatcher, 1992, *Advanced Test Reactor Risk Summary*, PG-T-92-129, EG&G Idaho, Inc., September 1992.

CFR, 2002, *Nuclear Safety Management*, 10 CFR 830, *Code of Federal Regulations*, Office of the Federal Register, February 4, 2002.

CFR, 2003, *Occupational Safety and Health Standards*, 29 CFR 1910, *Code of Federal Regulations*, Office of the Federal Register, July 21, 2003.

Companywide Manual, *Engineering and Research*.

Companywide Manual, *INEEL Emergency Plan/RCRA Contingency Plan*, with TRA Facility Specific Addendum.

Companywide Manual, *Quality and Requirements Management*.

Companywide Manual, *Operations*, with Reactor Programs supplemental procedures.

Companywide Manual, *Radiation Protection*.

Companywide Manual, *Safeguards and Security*.

Companywide Manual, *Safety and Health*.

DOE, 1983, *Guidelines for Job and Task Analysis for DOE Nuclear Facilities*, DOE/EP-0095, U.S. Department of Energy, Washington, D.C., June 1983.

DOE, 1997, *Occurrence Reporting and Processing of Operations Information*, 232.1A, U.S. Department of Energy, Washington, D.C., July 21, 1997.

DOE, 2000, *Comprehensive Emergency Management System*, 151.1A, U.S. Department of Energy, Washington, D.C., November 1, 2000.

DOE, 2001a, *Personnel Selection, Qualification, and Training Requirements for DOE Nuclear Facilities*, Order 5480.20A, U.S. Department of Energy, Washington, D.C., July 12, 2001.

DOE, 2001b, *Conduct of Operations Requirements for DOE Facilities*, Order 5480.19, Change 2, U.S. Department of Energy, Washington, D.C., October 23, 2001.

DOE, 2002, *Facility Safety*, Order 420.1A, U.S. Department of Energy, Washington, D.C., May 20, 2002.

DOE-ID, 1992, *Idaho National Engineering Laboratory Environmental Monitoring Plan: Baseline Document*, INEL EMP, U.S. Department of Energy, Idaho Operations Office, Idaho Falls, ID, June 1992.

INEEL, *Site Safeguards and Security Plan*.

INEEL, 2001a, *Combination Fire Hazard Analysis and Fire Safety Assessment ATR Building TRA-670 (HAD-116)*, March 19, 2001.

INEEL, 2001b, *Combination Fire Hazard Analysis and Fire Safety Assessment ATR Support Buildings (HAD-114)*, Rev. 0, March 19, 2001.

INEEL, 2003a, *Test Reactor Area (TRA) Hazards Assessment (HAD-3)*, Rev. 6, July 23, 2003.

INEEL, 2003b, *TRA Training Program*, PDD-105, Rev. 1, August 28, 2003.

CHAPTER 14

INITIAL TEST PROGRAM, INSERVICE SURVEILLANCE, AND MAINTENANCE

INTENTIONALLY BLANK

CONTENTS

ACRONYMS/ABBREVIATIONS 14-5

14. INITIAL TEST PROGRAM, INSERVICE INSPECTION, TESTING, AND MAINTENANCE 14-7

14.1 Initial Test Program 14-7

14.1.1 Summary of Initial Test Program and Objectives 14-7
14.1.2 Initial Test Descriptions 14-8
14.1.3 Postneutron Tests 14-8

14.2 Inservice Inspection 14-22

14.2.1 Inservice Inspection and Testing of the Primary Coolant Pressure Boundary (Class 1) 14-22
14.2.2 Inservice Inspection of Class 2 and 3 Components 14-24

14.3 Inservice Testing 14-25

14.3.1 Inservice Testing of Pumps 14-25
14.3.2 Inservice Testing of Valves 14-25

14.4 Maintenance 14-26

14.4.1 Maintenance Organization and Administration 14-26
14.4.2 Training and Qualification of Maintenance Personnel 14-27
14.4.3 Maintenance Facilities, Equipment, and Tools 14-28
14.4.4 Types of Maintenance 14-28
14.4.5 Maintenance Procedures 14-29
14.4.6 Planning, Scheduling, and Coordinating Maintenance 14-29
14.4.7 Control of Maintenance Activities 14-30
14.4.8 Post-maintenance Testing 14-31
14.4.9 Procurement of Parts, Materials, and Services 14-31
14.4.10 Material Receipt, Inspection, Handling, Storage, Retrieval, and Issuance 14-31
14.4.11 Control and Calibration of Measuring and Test Equipment 14-32
14.4.12 Maintenance Tools and Equipment Control 14-32
14.4.13 Facility Condition Inspection 14-33
14.4.14 Management Involvement 14-33
14.4.15 Maintenance History 14-34
14.4.16 Analysis of Maintenance Problems 14-34
14.4.17 Modification Work 14-34
14.4.18 Additional Maintenance Management Requirements 14-35

14.5 References 14-36

TABLES

14.1-1. Brief list of the Advanced Test Reactor startup chronology 14-11

14.1-2. Major Advanced Test Reactor Component Continuity Tests 14-12

14.1-3. Advanced Test Reactor System Operations tests 14-13

14.1-4. Advanced Test Reactor/Principal Tests and Experiments 14-14

ACRONYMS/ABBREVIATIONS

AEC	U.S. Atomic Energy Commission
ASME	American Society of Mechanical Engineers
ATR	Advanced Test Reactor
ATRC	Advanced Test Reactor Criticality Facility
CC	component continuity
CFR	Code of Federal Regulations
DOE	U.S. Department of Energy
IPT	inpile tube
ISI	inservice inspection
LMITCO	Lockheed Martin Idaho Technologies Company, Inc.
MBWA	management by walking around
MIP	maintenance implementation plan
MORT	Management Oversight Risk Tree
NRC	U.S. Nuclear Regulatory Commission
PCS	primary coolant system
RP	Reactor Programs
SO	system operations
SSC	structures, systems, and components
TRA	Test Reactor Area
TRAMO	Test Reactor Area Maintenance Operations
WO	work order

INTENTIONALLY BLANK

14. INITIAL TEST PROGRAM, INSERVICE INSPECTION, TESTING, AND MAINTENANCE

The Advanced Test Reactor (ATR) Upgraded Final Safety Analysis Report incorporates information required by U.S. Department of Energy (DOE) Orders 5480.23, 10 CFR 830, and 433.1 (DOE 1994, 2001a). DOE Order 5480.23, "Nuclear Safety Analysis Reports," and 10 CFR 830 requires the preparation of a safety analysis report to document the facility safety envelope (DOE 1994). DOE Order 433.1, "Maintenance Management Program for DOE Nuclear Facilities," provides policy and objectives for maintenance and repair of DOE facilities (DOE 2001a).

14.1 Initial Test Program

14.1.1 Summary of Initial Test Program and Objectives

The ATR equipment and hardware were subject to vendor testing to ensure satisfactory performance. In addition to these vendor tests, the equipment installed at ATR was subjected to component continuity (CC) tests by the construction contractor. These tests and the results were reviewed by the U.S. Atomic Energy Commission (AEC), the design contractor, and the operating contractor. The completed systems, after turnover to the operating contractor, were subjected to operational testing and performance evaluation by the operating contractor. These system operation (SO) tests and results were reviewed by the AEC and design contractor.

The startup program for ATR was an organized series of experiments and proof tests that, in conjunction with the experiment program in the ATR Critical (ATRC) Facility, demonstrated that equipment and systems were properly installed and that the reactor was completely capable of operating according to design specifications set forth in the original ATR Safety Analysis Report (deBoisblanc and Cohen 1965). The program was divided into two major parts: preneutron (Part I) testing and postneutron (Part II) testing. The postneutron program was further divided into three parts: (a) Part II A, initial fuel loading and zero power experiments (Henscheid et al. 1967), (b) Part II B, intermediate power physics and engineering tests (Kaufman et al. 1969; Durney et al. 1972), and (c) Part II C, high power demonstration (Durney et al. 1972).

The preneutron and postneutron testing followed a general sequence outlined below.

1. All tests on equipment and systems that were either independent of the reactor or that were conducted with the temporary vessel bypass.
2. Tests that in essence were a continuation of Part I tests, but that required the vessel to be a connected part of the primary coolant system (PCS).
3. Tests that required the vessel, its internals, all drive systems, all instruments, etc., to be complete. These tests began after the construction contractor turned the ATR over to Phillips Petroleum Company, the operating contractor.
4. Tests with neutrons, including first criticality, physics tests, and power approach.
5. Postpower tests.

Table 14.1-1 shows a brief list of the ATR startup chronology.

14.1.2 Initial Test Descriptions

Table 14.1-2 lists the major CC tests (deBoisblanc and Cohen 1965).

Table 14.1-3 lists the SO tests for the ATR (deBoisblanc and Cohen 1965). These tests included check-out and performance of the entire system, including instrumentation and control response. In several of the operational tests, equipment specifications did not exist to compare the results of the test. Therefore, the assumed or calculated parameters used or determined in design were compared to test results.

These SO tests were the minimum required to be completed for ATR operation. This list is not the complete list of all SO tests run. For example, other SO tests were performed at later dates to provide confirmatory data and new data for newly developed equipment. A list of all SO tests run is available from the Federal Record Center in Seattle, Washington.

14.1.3 Postneutron Tests

ATR was subjected to extensive testing, which covered preloading, hydraulic, critical loading, low-power physics, approach to power, and full-power tests.

14.1.3.1 Preloading Procedures and Tests. After all CC and SO tests were completed, the following preloading tests and procedures were begun:

- A Hydraulic Program. This was a series of full core tests using instrumented dummy fuel elements to determine if any hydraulic instabilities or undesirable interactions occur between fuel elements.
- Instrument System Response Tests. The reactor and process control instrumentation were subjected to open loop, frequency response tests that provided data to initially adjust control modes.
- Fuel Inspection Procedures. The ATR fuel elements were inspected to ensure dimensional specifications were met and gamma scanned for fuel content. Each element for the first core was tested in the hydraulic facility at conditions of temperature and flow more severe than expected during operation. The entire core was evaluated in the ATRC Facility relative to reactivity and power profile measurements.
- Control and Safety Rod Poison Determination. The ATR control and safety rod poison sections were neutron source checked for absorption properties, and reactivity worths were measured in the ATRC Facility.
- Detector Arrangement. The detector arrangement used in the ATR for initial loading was checked in the ATRC Facility. The arrangement minimized shadowing effects and ensured adequate sensitivity of the detectors.

14.1.3.2 Criticality Tests and Full Core Loading for the ATR. The ATR was loaded in the same manner as the ATRC Facility. After source insertion, detectors were calibrated and auxiliary detectors were installed as required. Fuel loading was performed in a stepwise manner previously determined to be safe in the ATRC Facility. The total reactivity of each step was limited, and careful counting checks were made during each element insertion. After achieving a critical loading, a preliminary safety rod calibration was made to ensure adequate shutdown capability for the full core loading. After the full core loading was complete, a preliminary power calibration was made by foil measurements. These measurements permitted detector calibration and provided a comparison with ATRC Facility results. A preliminary estimation of shutdown reactivity was made to obtain a base for detailed rod calibrations.

14.1.3.3 Low-Power Physics Tests for ATR. Postneutron, low-power physics tests measured the following reactor parameters:

- Preliminary Rod Calibrations. Control rod intercomparisons provided an approximation of total reactivity and also yielded a rough statistical weight map of the core.
- Determination of Excess Reactivity. The excess reactivity of the reactor was determined by the distributed poison method.
- Detailed Flux Measurements for Balanced Core. Detailed core flux mapping was performed with a balanced lobe power arrangement to provide data for predicting core and heat transfer performance.
- Detailed Rod Calibrations. The reactivity worths of individual and ganged rod configurations were determined for the safety, outer cylinder, and neck rods, including interaction effects. Methods were based on the multiplication method, period measurements, pulsed neutron measurements, rod drop procedures, and intercalibration.
- Void Coefficients. Detailed void measurements, made in various core areas, are required to determine important void effects (both positive and negative) on reactivity in the ATR.
- Fuel and Poison Statistical Weights. A determination was made of the relative spatial distribution of the response to a small amount of poison and of a small fuel sample. Comparing the values of the measurements with the corresponding quantity calculated using the adjoint flux aided in setting up the core loading computational procedures to be used in future operations.
- Detailed Flux Maps for Unbalanced Core Configuration. Detailed maps of thermal flux and fast neutron flux were prepared for the ATR with the 40-50-60-MW power split.
- ATR-ATRC Facility Intercalibration Tests. Detailed measurements of flux, power, and other parameters were made in the ATR and ATRC Facility to establish equivalency.
- Reactor Safety Stability Studies. Measurements of the effective delayed neutron fraction, neutron lifetime, interlobe kinetic behavior, and transfer function were made to check calculated values for the ATR and to ensure that the safety studies based on calculations were valid. Techniques included pile oscillator, noise, and pulsed neutron measurements.

14.1.3.4 Approach to Power. Many of the tests previously performed on the ATR were repeated during the approach to power. These tests included

- Hydraulic capability tests
- Final rod performance tests
- Stepwise power increase tests
- Heat transfer tests
- Reactor safety stability studies at power
- Temperature coefficient tests
- High power flux mapping
- Fuel inspection.

14.1.3.5 Full Power Core 1. The ATR operated at full power with a balanced lobe configuration. During this period, detailed data were obtained relative to reactor, process, and radiation systems to evaluate overall facility performance (Griebenow and Hanson 1976). Following the shutdown, the core was unloaded and subjected to detailed hot cell examination including destructive testing.

14.1.3.6 Ongoing Testing. Because of the ATR mission, the reactor core and various other parameters are subject to change each time the plant is shut down and experiments are changed. ATRC Facility measurements may be required to support new experiments or cores. Initial testing may be required before startup when new experiments have been inserted or a new core has been installed. The testing after startup, when required, is typically not as extensive as the initial Core 1 testing; however, it does cover the important affected parameters.

14.1.3.7 Record of ATR Principal Tests and Experiments. A list is kept of all the principal tests and experiments conducted for the ATR and the ATR fuel. This list also represents the tests and experiments that support the UFSAR. This list is shown in Table 14.1-4.

Table 14.1-1. Brief list of the Advanced Test Reactor startup chronology.

Date	ATR Startup Chronology
August 1960	Final conceptual design
December 1961	Construction begins.
May 1962 through August 1963	ATR critical experiments conducted.
May 1964	ATRC Facility begins operation.
July 1967	Initial criticality and zero-power test program (Core 0)
February 1968	Installed Core 1.
March 1968	Completed low-power phase of Power Escalation Programs.
November 1968	Resume power escalation program, thermal hydraulic tests.
February 1969	Resume power escalation program.
April 1969	Resume power escalation program (170 MW).
September 1969	Began power demonstration program (250 MW).
December 1969	Power Demonstration Program completed.

Table 14.1-2. Major Advanced Test Reactor Component Continuity Tests.

CC Test No.	Components Tested
CC-1	Special doors
CC-3	Electrically operated cranes
CC-4	Chain hoists
CC-7	Building leak test
CC-10	High-pressure air system
CC-11	Primary system cleaning, flushing, and hydrostatic testing
CC-12	Horizontal pump mounting, leveling, and alignment
CC-13	Vertical pump mounting, leveling, and alignment
CC-14	Air compressor mounting, leveling, and alignment
CC-16	Diesel generator and auxiliary equipment
CC-17	Demineralizers
CC-18	Cooling tower
CC-19	Cleaning and testing of secondary coolant piping and equipment
CC-20	Cleaning and testing of plant general service systems
CC-21	Process instruments
CC-23	Electrostatic shielding
CC-25	Transformers
CC-26	Motors
CC-27	Switchgear, motor control centers, and control panels
CC-28	Motor-generator sets
CC-29	Batteries
CC-33	Data processing equipment
CC-34	Motor operated valves
CC-38	Heating and ventilating systems
CC-40	Commercial power system
CC-41	Diesel power system
CC-42	Telemetering and supervisory control
CC-43	Cathodic protection system
CC-44	Lighting
CC-45	Communications and alarm systems
CC-101	Electrical check-out of reactor control, safety, and nuclear instrument systems
CC-102	Handling sling
CC-106	Reactor instrumentation drives

Table 14.1-3. Advanced Test Reactor System Operations tests.

SO Test No.	ATR System Operation Tested
SO-1	Primary coolant system
SO-2	Secondary coolant system
SO-3	High-pressure demineralized water system
SO-4	Low-pressure demineralized water system
SO-5	Utility cooling-water system
SO-6	Gland seal water system
SO-7	Liquid waste handling system
SO-8	High-pressure air
SO-9	Cooling tower
SO-10	Underwater saw
SO-11	Raw-water system
SO-13	Bypass demineralizer system
SO-14	Cooling tower chemical treatment system
SO-16	Pumps horizontal
SO-17	Pumps vertical
SO-18	Instrument air system
SO-19	Compressed air dryer
SO-20	Telemetering and supervisory control
SO-21	Cathodic protection system
SO-23	Equipment load tests
SO-26	Radiation monitoring system
SO-27	Process instrumentation
SO-101	Reactor control, safety, and nuclear instrumentation system
SO-102	Reactor internals hydraulic
SO-107	Safety rod drives
SO-108	Neck shim drives
SO-109	Outer shim drives
SO-110	Storage space systems
SO-111	Reactor handling tools
SO-112	Canal transfer devices

Table 14.1-4. Advanced Test Reactor/Principal Tests and Experiments

ID	Authors	Title	Date	UFSAR	Subject	Notes
ANCR-1015	M. L. Griebenow (ed.)	ATR Extended Burnup Program	November, 1971	Chapters 4, 15	Fuel Performance	Test Program to extend burnup limits for ATR fuel
ANCR-1016	R. M. Brugger, E. E. Burdick, W. C. Francis, R. L. Heath, and J. F. Kunze	Nuclear Technology Division Annual Progress Report for Period Ending June 30, 1971	October, 1971	Chapter 4	Fuel performance	pp. 132-134, fuel plate blister resistance testing
ANCR-1027	M. J. Graber, G. O. Hayner, R. R. Hobbins, and G. W. Gibson	Performance Evaluation of Core II and III Advanced Test Reactor Fuel Elements	October, 1971	Chapter 4	Fuel performance	Fuel plate operating performance tests
ANCR-1080	J. L. Durney, et al.	Reactor Physics Results from the ATR Power Demonstration program	October 1972	Chapters 4, 14	Core Physics	Core flux stability measurements, power coefficient, and other data
BAW-1322	R. E. Manoli	Advanced Test Reactor Internals Vibration Summary	May 1968	Chapter 3	Vessel internals	Summary of ATR internals vibration tests
BNWL-216	E. D. Waters	Heat Transfer Experiments for the Advanced Test Reactor	May, 1986	Chapters 4, 15	Fuel thermal-hydraulics	Ex-reactor burnout tests for simulated fuel element
BNWL-CC-456	J. L. Bates	Thermal Diffusivity of MTR-ETR Type Fuel Plates, Final Report	January, 1966	Chapter 4	Fuel design	Thermal diffusivity measurements on sample fuel plates
CHO-08-93	C. H. Oh	High Pressure CHF Data	October, 1993	Chapter 15	Fuel thermal-hydraulics	By reference, ATR-specific low flow CHF tests at 20, 35, and 50 psia
CI-1035	W. C. Francis, F. H. Tingey, et al.	Quarterly Report, Status of Test Reactor Fuel Development Activities, period Ending January 31, 1967	February, 1967	Chapter 4	Fuel design	Tests for fuel plate thermal stress and buckling resistance

Table 14.1-4. (continued).

ID	Authors	Title	Date	UFSAR	Subject	Notes
CI-1045	D. R. deBoisblanc and S. Cohen	ATR primary Coolant System Rework Digest for Safety Evaluation	June, 1967	Chapter 3	PCS	Preoperational test program including rework found necessary
CI-1108	H. L. Magleby	ATR emergency Flow Following Primary Flow Coastdown	July, 1968	Chapter 15	PCS performance	By reference to TRA-ATR-739, primary pumps coastdown test
Fra-113-74	W. C. Francis	Transmittal of INC-16-2 Results	July 1974	Chapter 4	Fuel performance	Fuel plate sample irradiation tests for extended burnup
Fra-219-71	W. C. Francis	Microcracking Phenomena	November, 1971	Chapter 4	Fuel performance	Tests indicating lower blister and cracking resistance for low temperature irradiation
Hayn-38-70	G. O. Hayner	Best Estimate of the Compressive Yield Strength vs. Temperature of Unirradiated ATR Plate 19	November, 1970	Chapter 4	Fuel performance	Test results for strength of composite Ualx fuel plate
IDO-17021	D. R. deBoisblanc and S. Cohen	Safety Analysis Report, Advance Test Reactor	April, 1965	Chapters 4, 5, 6, 14, 15	Testing summaries	Summaries of development tests for ATR
IDO-17154	W. C. Francis (ed.)	Annual Progress Report on Reactor Fuels and Materials Development for FY 1965	November, 1965	Chapter 4	Fuel design	ATR fuel fission gas retention tests
IDO-17218	W. C. Francis and R. A. Moen (eds.)	Annual Progress Report on Reactor Fuels and materials Development for FY 1966	November, 1966	Chapter 4	Fuel, Reflector design	ATR fuel fission gas retention tests and beryllium swelling and corrosion tests
IDO-24460	D. W. Koch, K. F. Riskevics, and E. E. Ritchie	Advanced Test Reactor, Investigation of the Corrosion Behavior of Materials for Construction	August, 1963	Chapters 4, 5	Materials performance	Corrosion tests for ATR reactor materials (excluding fuel)

Table 14.1-4. (continued).

ID	Authors	Title	Date	UFSAR	Subject	Notes
IDO-24461	R. E. Deville	Differential Thermal Expansion Tests on Advanced Test Reactor	October, 1963	Chapter 4	Fuel design	Tests for fuel plate thermal stress and buckling resistance
IDO-24463	H. D. Ferris and J. C. Moyers	Advanced Test Reactor Fuel Elements Hydraulic Buckling Tests	October, 1963	Chapter 4	Fuel Design	Fuel plate buckling tests
IDO-24465	M. W. Croft	Advanced Test Reactor Burnout Heat Transfer Tests	January, 1964	Chapters 4, 15	Fuel thermal-hydraulics	Ex-reactor burnout tests for simulated fuel element
IN-1036	H. D. Gronbeck	ETR Radiation Damage Surveillance Programs, Progress Report II	February, 1967	Chapter 4	Fuel design	ETR data applied to ATR
IN-1136	J. W. Henscheid, et al.	ATR Startup, Zero-Power Experiments and Comparison with ATR Critical Facility	December, 1967	Chapters 4, 14	Core physics	ATR zero-power physics test and comparison to ATRC
IN-1158	M. L. Griebenow	Isothermal Hydraulic Measurements in Fuel elements in ATR Core	September, 1968	Chapter 4	Fuel performance	In-core fuel elements hydraulic test
IN-1179	K. C. Sumpter	A primary Study on the Compressive Properties of Composite Nuclear Fuel Plates	April, 1968	Chapter 4	Fuel design	Tests to determine composite fuel plate strength properties
IN-1186	T. L. Bridges and T. K. Burr	ATR Primary Coolant System Check Valve problem Analysis and Correction	May, 1968	Chapter 15	PCS performance	Tests to determine corrective measures for primary pumps check valve closing problem
IN-1260	N. C. Kaufman, et al.	Reactor Physics Results from Low-Power Measurements in the Advanced Test Reactor	February, 1969	Chapter 14	Core Physics	Initial, low power ATR physics tests

Table 14.1-4. (continued).

ID	Authors	Title	Date	UFSAR	Subject	Notes
IN-1437	W. C. Francis (ed.)	Metallurgy and Materials Science Branch Annual Report, Fiscal Year 1970	November, 1970	Chapters 4, 15	Fuel, reflector performance	ATR fuel fission gas retention, blister resistance testing and beryllium swelling
INEL-94/089	R. T. McCracken, et al.	Results of nuclear Requalification Testing following the ATR Reflector V Core Internals Changeout Outage	December, 1994	Chapter 4	Core physics	ATR low power physics tests for reconfigured ATR core
KDB-4-75	K. D. Bulmahn	Evaluations of ATR Gas Leakage Experiments	September, 1975	Chapter 15	Core heat transfer	Experiments to define potential gas flow paths to core from in-pile tube leak
Liv-6-86	R. A. Livingston	ATR Requalification Hydraulic Test PST-5	May, 1986	Chapter 4	Core hydraulics	Reflector IV hydraulics measurements
Mag-4-68-M	H. L. Magleby	ATR Pressurizing System SO-102 Tests	February, 1968	Chapter 15	PCS performance	System operations test data for pressurizing system operation
Ned-29-71	M. J. Neder	Irradiation of an ATR Fuel Element with known defects	January, 1971	Chapters 4, 15	Fuel performance	Isothermal flow blockage tests
Ni-10-77	H. H. Nielson	ATR Reflector III Design Criteria Compliance	August 1977	Chapter 4	Core hydraulics	Reflector III hydraulics measurements
Nucl. Tech., 49	J. M. Beeston, R. R. Hobbins, G. W. Gibson, and W. C. Francis	Development and Irradiation Performance of Uranium Aluminide Fuels in Test Reactors	June, 1980	Chapter 4	Fuel design	pp. 136-149, development tests for ATR fuel
ORNL-3541	J. C. Griess, J. C. Saveage, and J. L. English	Effect of Heat Flux on the Corrosion of Aluminum by Water	February, 1964	Chapter 4	Fuel performance	Fuel plate oxide corrosion buildup tests

Table 14.1-4. (continued).

ID	Authors	Title	Date	UFSAR	Subject	Notes
ORNL-3557	W. R. Martin and J. R. Weir	Mechanical Properties of X8001 and 6061 Aluminum Alloys and Aluminum-Bas Fuel Dispersion at Elevated Temperatures	February, 1964	Chapter 4	Fuel design	ATR fuel element material properties test data
ORNL-TM-3300	J. R. Weir, Jr., and R. T. King	Irradiation Damage to Aluminum and Aluminum Alloys	July, 1971	Chapter 4	Materials performance	PP. 276-294, irradiation damage tests for ATR fuel cladding and internals
PG-T-84-010	R. T. McCracken	ATR Power Increase Test Data	June, 1984	Chapter 15	core physics	By reference in NRRT-N-92-009, Rev. 1, reg. rod withdrawal tests with measured power data
PG-T-84-011	M. A. Tupper	Hafnium Irradiation Damage, Continued Surveillance	July 1984	Chapter 4	Hafnium performance	Hafnium material properties tests for loss of ductility due to irradiation
PG-T-86-007	J. E. Dwight, R. T. McCracken, W. D. Gregory, and W. M. Yarbrough	Results of Physics Tests Following ATR Core Internals Changeout	July, 1986	Chapters 4, 15	Core physics	ATR low power physics tests for new reflector and internals (used for physics code benchmarks)
PG-T-87-009	J. L. Durney, W. G. Reuter, G. K. Miller, and G. A. Reimann	ATR Lifetime and Primary Coolant System IGSCC Assessment	December, 1987	Chapters 4, 5	Vessel performance	Vessel irradiation fluence
PG-T-89-001	S. M. Graham, W. R. Lloyd, and W. G. Reuter	Fracture Toughness and Tensile Test Results for Unirradiated Weldment of Type 304 Stainless Steel	May, 1989	Chapter 5	Materials performance	Unirradiated vessel material properties
PG-T-89-024	W. R. Lloyd	Evaluation of Axial Shear Forces in Swaged Joints of ATR Fuel Elements	September, 1989	Chapters 4, 15	Fuel design	Tests for swage joint shear or slip resistance

Table 14.1-4. (continued).

ID	Authors	Title	Date	UFSAR	Subject	Notes
PG-T-93-022	R. T. Mccracken	Results of ATR Critical Facility Core Reconfiguration and Requalification Testing for Post Process Control Upgrade Operation	November, 1993	Chapter 4	Core physics	ATRC tests for reconfigured ATR core
PG-T-94-002	R. T. McCracken and W. M. Yarbrough	Results of Nuclear Requalification Testing following the ATR Process Control Upgrade Outage	March, 1994	Chapter 4	Core physics	ATR low power physics tests for reconfigured ATR core
PG-T-94-006	R. T. McCracken and L. S. Loret	Results of ATR Critical Facility Core Reconfiguration and Requalification Testing for Post Core Internals Changeout Operations	June, 1994	Chapter 4	core physics	ATRC tests for reconfigured ATR core
PR-T-77-003	J. L. Durney	ATR Burnup Extension	December, 1977	Chapter 4	Fuel performance	Extended burnup testing of ATR fuel elements
PR-T-80-009	R. N. Beatty	ATR Primary Coolant System pH Test Run #2	February, 1980	Chapter 4, 5	Fuel performance	Reference by JLD-17-82; test for acceptability of operation up to pH of 5.4
PTR-732	M. L. Griebenow	Ex-Reactor Heat Transfer Experiments Simulating ETR Fuel Element Geometry	December, 1964	Chapters 4, 15	Fuel thermal-hydraulics	Ex-reactor forced convection heat transfer tests for simulated fuel element
RE-M-77-011	J. M. Beeston and R. K. Malik	Burnup Extension Analysis of Two 7F Fuel Elements	November, 1977	Chapter 4	Fuel performance	Extended burnup testing of ATR fuel elements

Table 14.1-4. (continued).

ID	Authors	Title	Date	UFSAR	Subject	Notes
RTMc-4-94	R. T. McCracken	Review of hafnium Depletion Data from Reflector IV Control Element Reactivity Measurements	May, 1994	Chapter 4	Hafnium performance	Reactivity measurements to determine hafnium poison depletion
SDT-E91-1296	Babcock & Wilcox	Autoclave Boehmite Prefilming of ATR Elements, Final Report	September, 1995	Chapter 4	Fuel performance	Referenced by BHH-21-96; testing for using autoclave to prefilm ATR fuel elements
TR-140	S. Cohen	Advanced Test Reactor Building Leak Test Summary Report	December, 1967	Chapter 6	Confinement performance	Base confinement leak test
TR-386	Aerojet Nuclear Company	ATR Operating Envelope Extension	May, 1973	Chapters 4, 15	Core Physics	Summaries of tests for reactivity worths and core physics
TR-639	G. C. Gose and D. T. Neill	ATR Siphon Breaker Performance Investigation	April, 1975	Chapter 15	PCS performance	Siphon breaker performance tests at Idaho State University
TR-727	M. L. Griebenow and G. H. Hanson	ATR Core-1 Thermal-Hydraulic Test Results	September, 1976	Chapters 4, 14, 15	Fuel thermal-hydraulics	In-core fuel thermal-hydraulics tests
TRA-ATR-1094	G. N. Fillmore	ATR Fuel Element Hydraulic Testing History	November, 1995	Chapter 4	Fuel performance	History of ATR fuel element hydraulic tests
TRA-ATR-1123	E. L. Shaber	Boehmite Coating Evaluation	February, 1996	Chapter 4	Fuel performance	Referenced by MGG-21-96; fuel plate examinations for autoclave prefilming of ATR fuel
TRA-ATR-656	R. A. Clemons	Document Draft Report of ATR S.O.-102, Reactor Internals Hydraulics Test	April, 1992	Chapters 4, 15	Core hydraulics	Test summaries for ATR core internals hydraulics tests
TRA-ATR-932	J. A. Close	Large Scale Molten Aluminum/Water Quench Experiments for the ATR	October, 1996	Chapter 15	Core heat transfer	Experiments to determine likelihood for steam explosions in molten ATR core

Table 14.1-4. (continued).

ID	Authors	Title	Date	UFSAR	Subject	Notes
TREE-1063	J. M. Beeston	Properties of Irradiated Beryllium, Statistical Evaluation	October, 1976	Chapter 4	Beryllium performance	Irradiation induced swelling of beryllium
TREE-1140	J. M. Beeston	Hafnium Irradiation Damage	June, 1977	Chapter	Hafnium performance	Tests for Hafnium irradiation effects
TRTSB-ATR-023	S. Fershutut	ATR Building Leak Rate Test Evaluation	November, 1981	Chapter 6	Confinement performance	Base confinement leak test using pressure decay method
TRTSB-ATR-040, Rev. 1	C. B. Delaney and G. J. McCarty	Capacities of Battery Banks Supporting ATR Operations	April, 1986	Chapter 8	Battery banks performance	Battery bank rundown test data
TRTSB-ATR-093, Rev. 1	R. A. Livingston	ATR Hafnium Fluence Limits	September, 1984	Chapter 4	Hafnium performance	Hafnium material properties tests for loss of ductility and fluence limits

14.2 Inservice Inspection

The ATR Inservice Inspection (ISI) Plan has been developed for selected plant systems and components using the American Society of Mechanical Engineers (ASME) Boiler and Pressure Vessel Code, Section XI, as a guide (ASME 1989, no addenda). Original construction radiographs, where available, are used as baseline data unless they are replaced with more recent inspection results. In accordance with the ATR ISI Plan (INEEL 2002), inspection results are evaluated, and indications that acceptance criteria are not met are resolved by repair, replacement, or analysis. System pressure tests are conducted on the ATR primary coolant system (PCS) (a) before startup following shutdowns in which the PCS is depressurized to atmospheric pressure, and (b) once each 10-year inspection interval. System pressure tests are conducted on individual loop facilities (a) prior to operation after each experiment change out (the required inspection will only be required in the area of the loop inpile tube (IPT) Closure Assembly provided maintenance was not performed in other areas of the loop), and (b) once each 10-year inspection interval.

14.2.1 Inservice Inspection and Testing of the Primary Coolant Pressure Boundary (Class 1)

The ATR ISI Plan (INEEL 2002) provides a detailed, comprehensive plan for periodic examination of the ATR to monitor for degradation. The plan is developed from an adaptation of criteria established by the AEC/U.S. Nuclear Regulatory Commission (NRC) in Section 50.55a of 10 CFR 50 (Code of Federal Regulations) and Regulatory Guide 1.26 (NRC 1976). In accordance with these criteria, one of four safety classifications is assigned to a fluid system based on the relative importance of the system to plant safety. Overall inspection requirements are established commensurate with the safety classification of the system. Class 1, Class 2, and Class 3 component inspection is discussed in this section. Class 4 components are not important to safety and are not discussed. The experiment loop IPTs are in-core components that form a part of the Class 1 pressure boundary and the loop piping (greater than 1/2 in. nominal pipe size) connected to the IPTs are classified as a Class 3 pressure boundary.

ASME Section XI is used as a guide to provide a systematic organizational method and standardized nomenclature for establishing detailed inspection requirements. Since Section XI was developed for commercial power plants and after the ATR was designed and constructed, the detailed inspection requirements are tailored to the specific features of the ATR (e.g., the ATR primary coolant pressure boundary has some inaccessible areas).

The ISI plan for the ATR (INEEL 2002) is intended to be flexible and amenable to change as required to accommodate changing inspection requirements and field conditions. As the plan is implemented, it is updated to field conditions in order to develop the most effective and efficient long-term plan.

14.2.1.1 System Boundary Subject to Inspection. The ISI plan for the ATR (INEEL 2002) was formulated to cover periodic inspection requirements for (a) the primary system including the primary coolant flow loop, reactor vessel, emergency coolant pumps, pressurizing system, degassing system, and the surge tank, (b) the bypass demineralizer system, (c) the demineralized water makeup system, (d) the emergency firewater injection system, (e) the vessel vent system, (f) the gland seal and warm seal water systems, and (g) the experiment loop piping systems. The components to be examined are specifically identified, the inspection method is recommended, and a schedule for conducting the examinations is provided.

14.2.1.2 Accessibility. The ATR was designed and constructed before implementation of the ASME Section XI Code for ISI. Therefore, ISI accessibility at the ATR was not a design consideration. As a result, some areas of the systems are partially or totally inaccessible. These access limitations are caused by radiation levels, equipment and support interferences, insufficient personnel working space, and safety considerations.

14.2.1.3 Examination Techniques and Procedures. The three types of examination techniques used are visual, surface, and volumetric. All nondestructive examinations are performed in accordance with Contractor's procedures, which are based on the applicable industry standards. Alternative examination methods, combinations of methods, or newly developed techniques may be substituted for the designated method provided that the equivalence or superiority of the method can be demonstrated.

14.2.1.4 Inspection Intervals. An inspection interval is typically a 10-year interval, which is consistent with ASME Section XI requirements. Specific details concerning the program, such as the schedule, interval overlap, and rotational basis for disassembly of components, are found in the ATR ISI Plan (INEEL 2002).

14.2.1.5 Evaluation of Examination Results. ISI examinations are performed by inspectors qualified in accordance with Contractor's procedures. Data taken during these examinations are interpreted in an expeditious manner, and those indications not meeting acceptance criteria are reported for evaluation in accordance with the Contractor's *Quality and Requirements Management*, control of nonconforming items.

14.2.1.6 System Pressure Tests. ATR fluid systems are periodically pressure-tested as defined in the ATR ISI Plan (INEEL 2002).

Components within the Class 1 ATR primary pressure boundary are subjected to system leakage tests following each refueling outage.

Hydrostatic pressure tests are performed at least once during each inspection interval. A hydrostatic pressure test may be performed at or near the end of each inspection interval. Any repairs, replacements, or modifications that affect the pressure boundary of the loop have a pressure test conducted per the ATR ISI Plan (INEEL 2002).

14.2.2 Inservice Inspection of Class 2 and 3 Components

The ISI plan provides a detailed, comprehensive plan for periodic examination of selected systems and components. A general description of the plan is located in Section 14.2.1. Section 14.2.1 discusses the use of safety classifications. Further detail is found in the ATR ISI Plan (INEEL 2002).

14.2.2.1 Systems and Components Subject to Inspection. The systems and components subject to inspection are discussed in Section 14.2.1.1. These components and systems are further broken down into Code Classes 1, 2, and 3. The components to be examined are specifically identified, the inspection method is recommended, and a schedule for conducting the examinations is provided. This information is available in the ATR ISI Plan (INEEL 2002).

14.2.2.2 Accessibility. The accessibility for ISI Code Class 2 and 3 components and systems follows the same guidelines for Code Class 1 components as stated in Section 14.2.1.2. Details of these guidelines are found in the ATR ISI Plan (INEEL 2002).

14.2.2.3 Examination Techniques and Procedures. The examination techniques used for Code Class 2 and 3 components and systems are identical to Code Class 1 components and systems and are covered in Section 14.2.1.3. All nondestructive examinations are performed in accordance with the Contractor's procedures.

14.2.2.4 Inspection Intervals. An inspection interval is typically a 10-year interval which is consistent with ASME Section XI requirements. Further description and detail of the inspection interval(s) are located in the ATR ISI Plan (INEEL 2002).

14.2.2.5 Evaluation of Examination Results. Code Class 2 and 3 components and systems undergo the same detailed evaluation process as is performed for Code Class 1 systems and components. A description of the evaluation of examination results is located in Section 14.2.1.5 and the ATR ISI Plan (INEEL 2002).

14.2.2.6 System Pressure Tests. ATR fluid systems are periodically pressure-tested as described in Section 14.2.1.6.

14.3 Inservice Testing

14.3.1 Inservice Testing of Pumps

14.3.1.1 Scope and Requirements. The functional test acceptance criteria are defined in the ATR ISI plan. Pumps which are subjected to periodic testing to verify operational readiness are identified in the ATR ISI Plan.

14.3.1.2 Test Requirements. During each inservice test, the pump operates at nominal motor nameplate speed and reference differential pressure or flow. The quantities to be measured or observed are defined in the ATR ISI Plan (INEEL 2002).

14.3.1.3 Test Schedule. The testing frequency and reference conditions for the ATR pumps are selected by ATR Operations to meet the intent of Section XI with minimum perturbation of the normal ATR operating cycle. Two sets of reference conditions may be selected to permit testing during both normal operation and shutdown.

14.3.2 Inservice Testing of Valves

14.3.2.1 Scope and Requirements. The functional test acceptance criteria for valves are defined in the ATR ISI plan. The valves which are subject to periodic testing to verify operational readiness are identified in the ATR ISI Plan. Valves which perform functions in the ATR experiment loop are subjected to periodic inspection and testing to verify operational readiness. The functional test acceptance criteria are taken from criteria defined in the ASME Code, Section XI (ASME 1989).

14.3.2.2 Test Requirements. The necessary valve stem or disk movement is established by exercising the valve while observing either an appropriate indicator that signals the required change of the valve stem or disk position, or indirect evidence, such as changes in system pressure, flow rate, or temperature that reflect stem or disk position.

The safety relief valves are tested in accordance with the requirements of ASME Section XI (ASME 1989).

14.4 Maintenance

Test Reactor Area Maintenance Operations (TRAMO) is responsible for conducting maintenance at the ATR. The ATR Operations also performs some of the ATR maintenance. ATR Operations uses TRAMO's work control organization and its maintenance history capability. The current maintenance program at the TRA has evolved over approximately 40 years of operation. This program has made continual improvements over the years and is in full compliance with DOE Order 433.1 (DOE 2001a).

The approach to maintenance is graded to optimize the existing resources while ensuring a continued high level of availability and reliability of the facility structures, systems, and components important to safe and reliable operation. Implementation of the DOE Order is being achieved through a balanced combination of written guidance, personnel training and qualification, work site supervision, and management involvement. Self-assessments, maintenance analysis activities, independent audits/appraisals, and feedback from corrective action activities are used to monitor progress of improvements and their effectiveness.

14.4.1 Maintenance Organization and Administration

14.4.1.1 Maintenance Organization Policies. TRAMO conducts maintenance operations in accordance with various Contractor and TRA documents. The scope of TRAMO's responsibilities is defined in Reactor Programs (RP) procedures. Adherence to these procedures ensures that the maintenance policy is implemented in a safe, reliable, and consistent manner.

TRAMO is assigned the preventive maintenance responsibilities for various systems and performs corrective maintenance, support work, and fabrication work as requested by individual organizations. The TRAMO manager is responsible for assigning qualified craftworkers to perform the requested maintenance. The TRAMO manager also oversees the required planning, job coordination, and supervision necessary to perform the job safely and efficiently. The ATR Operations manager and other TRA customers provide access to equipment and ensure that the equipment is in a safe condition for maintenance. ATR Operations is responsible for performing all maintenance and surveillances involving systems designated as their responsibility by RP procedures. Designated systems are primarily associated with reactor control and nuclear instrumentation. ATR Operations interfaces with TRAMO to plan, track, and collect history on designated systems.

The ATR Facility Manager has the primary responsibility for modifications at ATR and interfaces with engineering, construction management, and outside support organizations. The ATR Facility Manager ensures that requirements for the plant ISI Plan based on ASME Section XI (INEEL 2002) are met, and then coordinates analysis of the results received from preventive maintenance and the ISI. TRA Engineering helps support the ATR Facility Manager by performing engineering analysis services and evaluations as requested.

14.4.1.2 Maintenance Strategy. The relationship among the supporting organizations as related to overall facility maintenance is accomplished by defining organizational responsibility, authority, and accountability. Personnel and procedural interfaces are identified within the procedures that direct the activities of the support organizations. A procedure has been written describing the work control system and how the various organizations interrelate to effectively conduct maintenance activities.

14.4.1.3 Staffing Resources. The selection of qualified personnel is the responsibility of the TRAMO manager. TRA Engineering provides engineering support to maintenance. Normally Structures, Systems, and Components (SSC) engineers have been established and are responsible for developing and maintaining technical expertise on their assigned plant system(s) or area(s), or both. SSC engineers ensure that the overall performance, reliability, safety, and condition of the assigned system meet high standards.

14.4.1.4 Goals and Objectives. Maintenance performance indicators have been established for many of the performance areas. The status of the performance indicators is updated periodically. Challenging goals are established for many of the performance areas and are periodically revised as necessary to assist in improving performance.

14.4.1.5 Accountability. A program has been established which recognizes and rewards good employee performance and which ensures that appropriate corrective action is taken for less-than-adequate performance. Non Bargaining unit employee performance appraisals, as part of the accountability program, are conducted when appropriate.

14.4.2 Training and Qualification of Maintenance Personnel

14.4.2.1 Responsibilities. Responsibilities for training maintenance personnel, including crafts, support personnel, supervisors, and managers, are established.

14.4.2.2 Maintenance Training Programs. TRAMO has training programs defined for its craftworkers and foreman. Supervisors within the organization also receive additional training.

14.4.2.3 Training Schedules and Support. Training schedules are prepared as needed with input from the TRAMO manager, supervisors, and foreman to support continuous training requirements.

14.4.2.4 On-The-Job Training. Reactor Programs procedures specify the requirements for and the conduct of on-the-job-training. Craftworkers are not assigned to work independently on tasks until they have completed the necessary training requirements.

14.4.2.5 Qualification. A formal qualification program is in place for TRAMO foremen, reactor instrument control technicians and selected crafts. Training and qualification records are maintained.

14.4.2.6 Training in Root Cause Analysis. Personnel are selected to perform root cause analysis, and root cause analysis training has been provided.

14.4.2.7 Training Program Approval, Effectiveness and Feedback. The TRAMO manager or designee is required to periodically evaluate the training program and provide feedback to the training manager concerning the effectiveness and adequacy of the program's content. The TRAMO manager is required to approve changes to the training program.

The ATR Operations manager is responsible for ensuring that the training received by ATR Operations personnel for performing maintenance is adequate.

14.4.2.8 Management and Supervisory Training. The implementation of DOE Order 5480.20A, addresses management and supervisory training (DOE 2001b).

14.4.3 Maintenance Facilities, Equipment, and Tools

14.4.3.1 Facilities. Maintenance shop and satellite work areas have been established to provide work areas with adequate safety and environmental controls, and utilities have been designed into the structure to support shop work. Laydown and staging areas have been established to support major maintenance activities. Temporary facilities (e.g., radiological confinements) have been established as required. Facilities are provided for decontaminating tools, parts, and building surfaces.

14.4.3.2 Tool and Equipment Storage. Adequate space is available for tool and equipment storage.

14.4.3.3 Office Equipment. The supply of office equipment necessary to support the maintenance is adequate.

14.4.4 Types of Maintenance

14.4.4.1 Master Equipment List. A list of equipment included in the maintenance program is maintained and updated on an as-needed basis. The list identifies both safety and non-safety related systems, structures, and components.

14.4.4.2 Types of Maintenance. TRAMO uses corrective, predictive, and preventive maintenance to provide a high degree of confidence that facility equipment degradation is identified and corrected and that equipment life is optimized. Various methods are available to personnel to identify the need for corrective maintenance. Methods for detecting defects include surveillances, inspections performed as preventive or predictive maintenance, self-assessments, ISIs, and other activities that result in evaluation of a component's condition.

Predictive maintenance is performed on selected equipment included in the maintenance program. Various techniques are considered including vibration analysis, oil analysis, thermography, motor circuit evaluations, and check valve signature tests and analyses.

Preventive maintenance is performed on selected equipment and scheduled on a predetermined frequency. Frequency and scope of preventive maintenance activities are periodically reviewed and revised to improve equipment performance and cost effectiveness.

14.4.4.3 Maintenance Action and Frequency Selection. A process is in place that establishes scope and frequency of preventive maintenance tasks. Generally, the frequency for preventive maintenance tasks is derived from historic task frequencies and the assigned system engineer's assessment of the effectiveness of previous task frequencies.

14.4.4.4 Scheduling. Preventive maintenance actions are scheduled based on previously developed frequencies. These actions are scheduled in the same manner as other types of maintenance.

14.4.5 Maintenance Procedures

14.4.5.1 Procedures Development and Writing. Procedures are established to identify the different types of work instructions that may be used to provide craft work direction. These procedures also provide information on the method used for change control and approval requirements.

14.4.5.2 Procedure Verification. Procedures require document owners to ensure that procedures are technically accurate, meet source requirements, and are administratively and functionally correct.

14.4.5.3 Procedure Validation. A process is in place that identifies when new or revised procedures should be validated and the various methods of validation that may be used.

14.4.5.4 Procedure Approval. All new and major revisions of procedures are reviewed and approved as appropriate. Review and approval of corrective maintenance work orders is determined by the planner based on criteria defined in the procedures. Preventive maintenance activities are approved by the equipment custodian (person responsible for equipment), and others, as appropriate, for the scope of work involved.

14.4.5.5 Procedure Use. Work orders contain the necessary instructions to perform an assigned task. Some higher risk maintenance work is performed using detailed operating procedures. Instructions are in place to identify how detailed operating procedures are to be used and describe the change control process.

14.4.5.6 Procedure Control, Periodic Review, and Revision. Procedures required for the performance of maintenance are either issued with the work document or in some cases issued separately upon beginning the work. Procedures are in place to ensure that work is performed to the most current revision of detailed operating procedures. Procedures are periodically reviewed at intervals specified in RP procedures. Procedures are in place to control both temporary and permanent procedure changes. Administrative requirements ensure that procedures affected by facility modifications are revised when the modification is completed.

14.4.6 Planning, Scheduling, and Coordinating Maintenance

14.4.6.1 Planning for Maintenance Activities. A centralized planning organization is in place to develop and issue work orders. Procedures describe the planning process.

14.4.6.2 Scheduling Maintenance Activities. An organization has been established to schedule maintenance activities during both outage and nonoutage periods.

14.4.6.3 Coordination of Maintenance Activities. Procedures delineate the responsibilities and interorganizational relationships of the different organizations with the scheduling organization.

14.4.6.4 Outage Planning, Scheduling, and Coordination. The TRAMO scheduling organization develops and maintains ATR outage schedules. ATR scheduled outages typically last one to two weeks and occur normally every 15 to 40 days. Periodically, major outages are scheduled, which typically last two to five months and have usually occurred every seven to nine years. These outages are scheduled to allow for major modifications or to replace major reactor core internals.

Because of the short operating cycle between outages, the planning effort typically begins about one month before the outage. Milestones are determined and placed on the schedule, and the final schedule is usually published one week before the outage. The performance objective to provide an adequate and effective outage schedule is then met. During the outage, scheduling meetings are normally held to coordinate maintenance activities and to determine job status. Updates to the schedule are distributed to the appropriate organizations, as needed.

A critique is generally held when the outage is completed to identify lessons learned. Results of this critique are routed to appropriate personnel. Past outage schedules are retained and used as appropriate in scheduling future outages. Forced outages are managed on a case-by-case basis.

14.4.7 Control of Maintenance Activities

14.4.7.1 Work Control Procedure. The work control system is described in administrative procedures. The work control system is used to control, direct, and record the performance of all maintenance activities.

The review and approval cycle for work orders is a well-defined process that involves the planning supervisor and others as appropriate. The review and approval cycle assists the maintenance organization in ensuring that personnel safety and post-maintenance tests are adequately addressed and that no unauthorized modifications are made to the facility.

14.4.7.2 Work Request. Procedures describe the generation, review and approval process for maintenance work control documents. A Planners Guide, controlled by the Planning Supervisor, is in place to provide a ready reference to planners for the generation and planning of work orders. This Guide includes items identified by DOE Order 433.1 and applicable contractor procedures.

14.4.7.3 Supervision of Maintenance Activities. Procedures assign the responsibility to coordinate and direct maintenance work to the craft foreman, who can further delegate this function to others, as appropriate, for the performed work.

14.4.7.4 Review of Completed Work Requests. Procedures describe the work order closeout process. This closeout process includes review of the completed work order by appropriate organizations.

14.4.7.5 Temporary Repairs. Temporary modifications are normally processed similar to permanent modifications but can be controlled through the use of approved work packages or appropriate management approved administrative controls.

14.4.7.6 Control of Non-TRA Facility Personnel. Non-TRAMO Personnel that perform maintenance or major modifications are required to follow the same procedures that TRAMO personnel are required to follow.

14.4.8 Post-maintenance Testing

14.4.8.1 Post-maintenance Test Requirements. The Work Control Procedure requires post-maintenance testing to be integrated into the work order. The integration is done during work planning.

14.4.8.2 Post-maintenance Test Program Scope. The Planner's Guide identifies representative types of post-maintenance testing dependent on the scope of the maintenance performed.

14.4.9 Procurement of Parts, Materials, and Services

14.4.9.1 Procurement Policy and Procedures. The procurement of services and materials at the TRA are controlled by Contractor procedures. These procedures include the authority to acquire materials and services from outside sources. These acquisitions are made according to applicable Government regulations.

14.4.9.2 Procurement Initiation. The responsibility for determining spare part requirements is formally addressed in the appropriate procedure.

14.4.9.3 Procurement Control. Current procedures establish controls for the procurement of spare parts, materials, and services. These controls include the following:

- Specification of minimum requirements for the suppliers' quality assurance program
- Timely resolution of supplier nonconformance
- Receiving inspection and tagging requirements
- Materials tracking of the requisition by the procurement organization.

14.4.9.4 Services. Special service agreements are established on a limited basis and typically involve specialized equipment or components.

14.4.10 Material Receipt, Inspection, Handling, Storage, Retrieval, and Issuance

14.4.10.1 Receipt and Inspection. Procedures are in place to ensure quality assurance requirements for receipt inspection are identified and performed. A program is in place to upgrade a part, component, or material purchased as commercial grade to a higher quality designation for subsequent installation.

14.4.10.2 Handling. All Contractor crane and forklift operators are required to be qualified and certified before operating the equipment. The cranes and forklifts are included in the inspection program for hoisting and rigging requirements.

14.4.10.3 Storage of Material and Equipment. Spare parts are stored and protected. Procedures are in place to ensure shelf-life items are identified and tracked.

14.4.10.4 Retrieval and Issuance. A spare parts catalog is maintained. The spare parts catalog contains the equipment number, any spare parts associated with that equipment number, and the location of that part. A Stores requisition normally documents the issuance of all spare parts. The quality control numbers are recorded on the material when appropriate.

14.4.11 Control and Calibration of Measuring and Test Equipment

14.4.11.1 Identification. Each item of Measurement and Test Equipment (M&TE) is identified and traceable through a unique number, which is attached. The Contractor's Standards and Calibration Laboratory maintains a list of all M&TE calibrated for the ATR. This list identifies the portable equipment that craftworkers use to check or calibrate the process instrumentation and perform measurements. The laboratory also maintains computer data bases concerning M&TE.

14.4.11.2 Calibration. Process instrumentation is calibrated using M&TE that has been calibrated by standards traceable to the National Institute of Standards and Technology or other nationally recognized standards. The Contractor's Standards and Calibration Laboratory supplies all the standards and calibrates the majority of measuring and test equipment used for maintenance. The Contractor's Standards and Calibration Laboratory maintains records and a recall system for the equipment that it calibrates.

14.4.11.3 Control. M&TE is stored in a manner to ensure that it is retrievable and not damaged. Calibration procedures ensure that measurement and test equipment used have current calibrations. M&TE with special uses, limitations, or restrictions is labeled.

14.4.11.4 Evaluation. Procedures require an evaluation of M&TE when a piece of equipment is found out of tolerance.

14.4.12 Maintenance Tools and Equipment Control

14.4.12.1 Storage and Issuance. TRAMO stores and issues many common use tools from contaminated and noncontaminated tool cribs, and issues measuring and test equipment from various satellite work areas.

14.4.12.2 Tool and Equipment Maintenance. Equipment and tools requiring periodic maintenance are normally included in the preventive maintenance program.

14.4.12.3 Use of Special Tools and Equipment. Special training and qualification in crane operation and in hoisting and rigging are required before a crafts worker may perform these activities.

14.4.13 Facility Condition Inspection

14.4.13.1 Standards. ATR Operations has an established inspection program which ensures the ATR facilities are maintained clean and in an acceptable physical condition. The ATR Operations Manager ensures this standard is met through periodic inspections with feedback to others on deficiencies.

14.4.13.2 Training. Personnel are aware of the standards expected through both the types of deficiencies identified and participation in the inspections.

14.4.13.3 Procedures. ATR Operations maintains a procedure that describes the ATR inspection program.

14.4.13.4 Scope of Inspections. The inspectors are required to perform a walkthrough of their assigned area. The procedure for this program gives a list of the types of deficiencies to inspect.

14.4.13.5 Inspection Program Elements. The inspection program identifies the area and inspection frequency.

14.4.13.6 Reporting Deficiencies. Inspectors are responsible for initiating corrective action. If the deficiency cannot be corrected within a short time, it is identified for additional follow-up.

14.4.13.7 Deficiency Follow-up. Deficiencies identified for additional follow-up are tracked until resolved.

14.4.14 Management Involvement

14.4.14.1 Manager Involvement. A "management by walking around" policy is used to foster open communication and self-assessment of daily operations. Managers and supervisors are encouraged to practice this policy on a regular basis. Management by walking around (MBWA) means having personal, informal, face-to-face contact, seeking employee input, improving understanding, and instilling commitment.

14.4.14.2 Results of Performance Indicators, Goals, and Objectives. Performance indicator data are collected, plotted, and evaluated against goals on a periodic basis (normally monthly). The data are provided to selected TRAMO personnel for information and action, as appropriate.

14.4.14.3 Feedback. Various feedback mechanisms ensure that open communication is promoted at all levels within the maintenance organization. These include regular staff meetings, management by walking around, management open-door policy, periodic meetings between management and craftworkers, craft steward meetings corrective action teams (minimal), design reviews, and work order reviews. A lessons learned program, described in Contractor procedures, has been implemented.

14.4.14.4 Program Review. A self-assessment program has been implemented. Results of the self-assessments are documented. Deficiencies not readily resolved are entered into a deficiency tracking system. This ensures that the item is tracked until it is resolved.

14.4.15 Maintenance History

14.4.15.1 Program Development. Maintenance history is maintained for most of the components and equipment included in the preventive maintenance program.

14.4.15.2 Data Collection. Data is gathered from completed work orders for inclusion in maintenance history.

14.4.15.3 Program Use. Maintenance history data are maintained on a personal computer data base and on the Computerized Maintenance Management System (CMMS).

14.4.16 Analysis of Maintenance Problems

14.4.16.1 Information Collection. Contractor procedures are in place and implemented that describe collection of data/information as part of the event investigation.

14.4.16.2 Event Analysis. Contractor procedures describe methods for investigating events to ensure all the facts are available.

14.4.16.3 Cause Determination. Root cause analysis techniques used are as described in the Contractor procedure on event investigation and occurrence reporting.

14.4.16.4 Corrective Action. Corrective actions are identified and implemented to remove or abate the impact of the identified root cause. The specific corrective action taken depends on the root cause identified.

14.4.16.5 Corrective Action Follow-up. Post maintenance testing is appropriately used to document successful completion of corrective maintenance where equipment problems were included in the cause of the event.

14.4.16.6 Generic Follow-up. Generic follow-up is treated the same as corrective action follow-up.

14.4.17 Modification Work

14.4.17.1 Maintenance Program Interface with Modifications. Several procedures describe how modifications are made. A process is in place to identify changes that must be made as a result of performing the modification. The SSC engineer is held responsible to ensure that these items are appropriately addressed during the design phase and are completed before closure of the project.

14.4.17.2 Temporary Repairs or Temporary Modifications. Temporary modifications are normally processed similar to permanent modifications but can be controlled through the use of approved work packages or appropriate management approved administrative controls.

14.4.18 Additional Maintenance Management Requirements

14.4.18.1 Seasonal Facility Preservation Requirements. A freeze protection plan is in place at the TRA. Procedures have been developed and implemented requiring development and implementation of a winterization plan.

14.5 References

ASME, 1989, *Rules for Inservice Inspection of Nuclear Power Plant Components*, ASME Boiler and Pressure Vessel Code, Section XI, American Society of Mechanical Engineers, New York, NY.

CFR, 1971, *Codes and Standards*, 10 CFR 50.55a, *Code of Federal Regulations*, Office of the Federal Register, June 12, 1971.

CFR, 2002, Safety Basis Requirements, 10 CFR 830, Subpart B, *Code of Federal Regulation*, Office of the Federal Register, February 4, 2002.

Companywide Manual, *Quality and Requirements Management*.

deBoisblanc, D. R. and S. Cohen, 1965, *Safety Analysis Report Advanced Test Reactor*, IDO-17021, Phillips Petroleum Co., April 1965.

DOE, 1994, *Nuclear Safety Analysis Reports*, Order 5480.23, Change 1, U.S. Department of Energy, Washington, D.C., March 10, 1994. (historical)

DOE, 2001a, *Maintenance Management Program for Nuclear Facilities*, Order 433.1, U.S. Department of Energy, Washington, D.C., June 1, 2001.

DOE, 2001b, *Personnel Selection, Qualification, and Training Requirements for DOE Nuclear Facilities*, Order 5480.20A, U.S. Department of Energy, Washington, D.C., July 12, 2001.

Durney, J. L., et al., 1972, *Reactor Physics Results from the ATR Power Demonstration Program*, ANCR-1080, Aerojet Nuclear Company, October 1972.

Griebenow, M. L. and G. H. Hanson, 1976, *ATR Core-1 Thermal-Hydraulics Test Results*, TR-727, Aerojet Nuclear Co., September 1976.

Henscheid, J. W., et al., 1967, *ATR Startup, Zero-Power Experiments, and Comparison with ATR Critical Facility*, IN-1136, Idaho Nuclear Corp., December 1967.

INEEL, 2002, "ATR Inservice Inspection Plan Third Inspection Interval June 1994 to May 2004 (PLN-859)," Rev. 4, October 15, 2002.

Kaufman, N. C., et al., 1969, *Reactor Physics Results form Low-Power Measurements in the Advanced Test Reactor*, IN-1260, Idaho Nuclear Corp., February 1969.

NRC, 1976, Quality Group Classifications and Standards for Water-, Steam-, and Radioactive Waste-Containing Components of Nuclear Power Plants, Regulatory Guide 1.26, Rev. 3, U.S. Nuclear Regulatory Commission, Washington, D.C., February 1976.